City of Pinole
Pinole-Hercules Water Pollution Control Plant Upgrades
December 3, 2015

DESIGNER

HDR Engineering, Inc.
2365 Iron Point Road, Suite 300
Folsom, CA 95630
(916) 817-4700

OWNER

City of Pinole
2131 Pear Street
Pinole, CA 94564

REGISTERED PROFESSIONAL ENGINEER
Theodore Kontonickas
No. 29378
Exp. 06/30/2017
MECHANICAL
STATE OF CALIFORNIA
12/3/15

GENERAL

Scope

A. This Addendum forms a part of the Bidding and Contract Documents and modifies the Project Specifications and Drawings described below.

B. This Addendum consists of 13 pages and the following attachments:
1. Specification Section 01060 – Special Conditions, Exhibit A "SRF Logo", (1 page).
2. Specification Section 02072 – Demolition, Cutting and Patching, Attachment - XRF Table (3 pages).
3. Section 11120 – Primary Clarifier and Gravity Thickener: Circular General Requirements (Reissued) (10 pages).
4. Section 11125 – Sludge Collection: Circular Suction-Type (Reissued) (12 pages).
5. Reissued Drawing 00C004 (11 x 17).
6. Reissued Drawing 02C101 (11 x 17).
7. Reissued Drawing 02C102 (11 x 17).
8. Reissued Drawing 02C103 (11 x 17).
9. Reissued Drawing 61A103 (11 x 17).
10. Reissued Drawing 21S103 (11 x 17).
11. Reissued Drawing 21S105 (11 x 17).
12. Reissued Drawing 31S109 (11 x 17).
13. Reissued Drawing 31S110 (11 x 17).
14. Reissued Drawing 31S112 (11 x 17).

15. Reissued Drawing 41S103 (11 x 17).
16. Reissued Drawing 41S104 (11 x 17).
17. Reissued Drawing 41S105 (11 x 17).
18. Reissued Drawing 00P004 (11 x 17).
19. Reissued Drawing 00P007 (11 x 17).
20. Reissued Drawing 13P102 (11 x 17).
21. Reissued Drawing 21P132 (11 x 17).
22. Reissued Drawing 21P134 (11 x 17).
23. Reissued Drawing 32P101 (11 x 17).
24. Reissued Drawing 32P102 (11 x 17).
25. Reissued Drawing 41P102 (11 x 17).
26. Reissued Drawing 91P102 (11 x 17).
27. Reissued Drawing 00E014 (11 x 17).
28. Reissued Drawing 61E103 (11 x 17).

Acknowledgment

A. Acknowledge receipt of this Addendum in the space provided on the Bid Form.

REVISIONS TO SPECIFICATIONS

Part 2 – Technical Specifications

Section 01560 – Environmental Protection and Special Controls

Article 3.6-1b Comment

CHANGE TO READ

"The contractor shall be responsible to comply with Mitigation Measure Number 3.6-1.b for temporary stormwater control plan associated with the SWPPP during construction. Permanent stormwater facilities are shown on Drawings."

Section 02317 – Precast and Prestressed Concrete Driven Piling

Article 3.6 C.

ADD

"1. Owner shall hire a testing agency and pay for testing."

Section 02513 – Asphaltic Concrete Vehicular Paving

Article 2.2 A.

CHANGE TO READ

"A. Mix design shall comply with Caltrans Section No. 39.
   1. 1/2 IN maximum medium asphalt concrete, Type A or B."

Section 04360 – List of Manufacturers

Article 3.07 Table
REPLACE WITH

"Section	Equipment	Manufacturer/Supplier
11061	Non-Clog Centrifugal Pumps	a. Fairbanks – Morse b. Morris c. Worthington
11068	Vortex (Torque-Flow)	a. Wemco b. Morris
11069	Progressing Cavity Pumps	a. Moyno b. Netzsch c. Seepex
11073	Vertical Turbine Pumps	a. Weir Floway b. Flowserve
11076	Submersible Non-Clog	a. Xylem Water Solutions USA, Inc. (Flygt) b. WEMCO, Inc. c. ABS, Inc.
11080	Submersible Grinder Pumps	a. Vaughn b. Wemco
11081	High Speed Turbo Aeration Blower	a. APG-Neuros, Inc. b. Aerzen c. Piller d. Spencer
11084	Submersible Propeller Pumps	a. Wilo-EMU USA b. Landia c. Flygt
11088	Aeration Equipment: Fine Bubble Type	a. Sanitaire- Silver Series b. EDI- Flex Air SSM c. Aquarius d. Stamford Scientific, Inc. (SSI)
11093	Perforated Plate Screens	a. Huber Technology, Inc., Esca Max b. Enviro – Care (FSM) c. Kusters Water
11094	Screenings Washer/Compactor	a. Huber Technology, Inc. b. Enviro – Care (FSM) c. Kusters Water
11096	Forced Vortex Grit Removal System	a. Smith and Loveless b. Ovivo
11120	Primary Clarifier and Gravity Thickener	a. Ovivo b. Westech c. Clearstream d. Evoqua

"Section	Equipment	Manufacturer/Supplier
11125	Sludge Collection: Circular Suction-Type	a. Ovivo b. Westech c. Clearstream d. Evoqua
11142	Rotary Drum Thickening System	a. Fokoku Koyogo Company, Ltd. b. Parkson Corporation, Hycor ThickTech c. IPEC
11322	Grit Cyclones and Classifiers	a. Wemco
11364	Dewatering Centrifuge	a. Alfa Laval b. Andritz c. Westfalia
11373	Submersible Mixers	a. Wilo-EMU USA b. Landia c. Flygt
11376	Rotary-Lobe Blowers	a. Roots b. Sutorbilt c. Aerzen d. Kaeser Compressors
11923	Liquid Polymer Batching System	a. Siemens Water Technologies b. Fluid Dynamics, Dynablend c. Velodyne, Velo Blend
11932	Chemical Metering Pump	a. Watson-Marlow b. Jesco
11947	Induction Mixing Equipment	a. Siemens Water Technologies b. The Mastrrr Company
15885	Odor Control system	a. Evoqua b. Bio-Air c. Purafil d. Biorem"

Section 09905 – Painting and Protective Coatings

Article 3.3 A.1.

CHANGE TO READ

"1. Interior walls, floors, sumps of concrete chemical containment areas (Chemical Storage, Ferric Chloride Storage, Sodium Hydroxide Storage): SYSTEM #36."

Section 10520 – Fire Extinguisher and Cabinets

Article 3.1 D

CHANGE TO READ

"D. Field locate fire extinguishers. Verify all extinguisher mounting locations with local Fire Marshal.

1. Provide one FEXT in Electrical Building, one FEXT in Solids Handling Building Sludge Thickening Room and one FEXT in solids Handling Building Drive-thru."

Section 11060 – Pumping Equipment: Basic Requirements

Article 2.4 A.4.

CHANGE TO READ

"4. Mount vertical pumps on single piece pedestal or fabricated steel support."

Section 11061 – Pumping Equipment: Non-Clog Centrifugal

Article 2.3 A.1.i.

CHANGE TO READ

"i. Maximum net positive suction head required (NPSHR): 8.5 FT."

Article 2.3 A.2.

CHANGE TO READ

"2. WAS Pumps 1 through 2 (42PMP031, 42PMP032):
   a. Design condition: 50 gpm at 10 FT TDH with minimum pump efficiency of 32 percent."
   b. Shutoff condition: 0 gpm at 12 FT TDH.
   c. Pump configuration Horizontal.
   d. Maximum pump speed: 1200 rpm.
   e. Maximum nameplate driver horsepower: 1.
   f. Drive type: Constant speed.
   g. Drive configuration: Flexible coupled.
   h. Minimum solids passage: 3 IN diameter.
   i. Suction size 3 IN diameter minimum, discharge size 3 IN diameter minimum.
   j. Maximum net positive suction head required: 20 FT."

Article 2.5 B.1.

CHANGE TO READ

"1. ANSI Class 125, 125 LB rated flanged nozzles for suction and discharge."

Article 2.5 E.3.

CHANGE TO READ

"3. Incorporate shaft sleeve (minimum Brinell hardness of 325) in stuffing box area to protect shaft from pumped liquid."

Article 2.5 F.5.

CHANGE TO READ

"5. Provide axial thrust outboard bearings of deep groove single or triple row ball type or angular contact double row ball type or tapered roller type suitable for thrust loads in two (2) planes."

Section 11069 – Pumping Equipment: Progressing Cavity

Article 2.3 A.1.c.
CHANGE TO READ
"c. Nameplate driver horsepower: 7.5 HP."

Article 2.3 A.2.
CHANGE TO READ
"2. Thickened Sludge Pumps (61PMP003, 61PMP013):
   a. Design condition: 50 gpm at 180 psi at 250 rpm.
   b. Secondary condition: 50 gpm at 155 psi at 235 rpm.
   c. Nameplate driver horsepower: 10 HP.
   d. Drive type: Variable frequency.
   e. Drive configuration: Right angle belt.
   f. Solids content: 9 percent.
   g. Suction: Open throat (hopper type configuration), discharge 6 IN DIA."

Article 2.3 A.3.a.
CHANGE TO READ
"a. Design condition: 150 gpm at 30 psi at 300 rpm."

Article 2.3 A.3.c.
CHANGE TO READ
"c. Nameplate driver horsepower: 7.5 HP."

Section 11081 – High Speed Turbo Aeration Blower

Article 2.1 H.
CHANGE TO READ
"H. Acceptable blower manufacturers shall include the following:
   1. APG-Neuros, Inc.
   2. Aerzen.
   3. Piller.
   4. Spencer.
   5. Or approved equal."

Section 11093 – Perforated Plate Screens

Article 2.1 A.
CHANGE TO READ
"A. Subject to compliance with the Contract Documents, the following manufacturers are acceptable:
   1. Huber Technology, Inc., EscaMax.
   2. Enviro – Care (FSM).
   3. Kusters Water.
   4. Or approved equal."

Section 11094 – Screenings Washer/Compactor

Article 2.1 A.

CHANGE TO READ

"A. Subject to compliance with the Contract Documents, the following manufacturers are acceptable:
   1. Huber Technology, Inc.
   2. Enviro – Care (FSM).
   3. Kusters Water.
   4. Or approved equal."

Section 11364 – Dewatering Centrifuge

Article 2.1 A.

CHANGE TO READ

"A. Subject to compliance with the Contract Documents, the following manufacturers are acceptable:
   1. Alfa Laval.
   2. Andritz.
   3. Westfalia.
   4. Or approved equal."

Section 11932 – Pumping Equipment: Chemical Metering Pumps

Article 2.1 A.

CHANGE TO READ

"A. Subject to compliance with the Contract Documents, the following manufacturers are acceptable:
   1. Pre-Packaged Peristaltic Chemical Metering Pump system provided through Watson-Marlow, Lutz-Jesco.
   2. Spare peristaltic chemical metering pump provided through Watson-Marlow or Lutz-Jesco.
   3. Or approved equal."

Article 2.2 B.1.a.

ADD

"3) Lutz-Jesco America Peridos."

Article 2.2 B.2.a.

ADD

"3) Lutz-Jesco America Peridos."

Article 2.2 B.3.a.

ADD

"3) Lutz-Jesco America Peridos."

Article 2.2 B.3.b.
ADD
"3) Lutz-Jesco America Peridos ALP."

Article 2.2 B.4.a.
ADD
"3) Lutz-Jesco America Peridos."

Article 2.2 B.4.b.
ADD
"3) Lutz-Jesco America Peridos ALP."

Article 2.3 B.1.
CHANGE TO READ
"1. Tubing: Marprene or Floprene."

Article 2.3 B.8.
CHANGE TO READ
"8. Track: PSS; aluminum Trimite polyester power coat, electrostatically applied and baked or 316 stainless steel."

Article 2.3 B.9.
CHANGE TO READ
"9. Drive: Pressure cast aluminum with Alocrom pre-treatment and exterior grade corrosion resistant polyester powder coat or 316 stainless steel."

Section 15060 – Pipe and Pipe Fittings: Basic Requirements

Article 3.12 H.1.a.2)
CHANGE TO READ
"2) SHO – Sodium Hydroxide."

Article 3.12 H.2.a.
ADD
"2) Buried service:
a) Material: CPVC, Type 1, Grade 1, Schedule 80.
b) Reference: ASTM F441.
c) Lining: None.
d) Coating: None.
e) Fittings: Solvent welded socket type complying with ASTM F439.
f) Joints: Solvent welded."

Article 3.12 I.2.c.
ADD
"4) FE piping at Effluent Pumping Station as shown on Drawings and FE piping greater than 24 IN:
a) Material: Steel fabricated pipe.

b) Reference: AWWA C200.
c) Lining: Fusion bonded epoxy.
d) Coating: Fusion bonded epoxy.
e) Fittings: AWWA C208.
f) Joints: Butt-welded with rigid AWWA C207 flanges at equipment, valves, and structure penetrations."

Section 15065 – Double Containment Piping System

Article 2.2 B.

CHANGE TO READ

"B. Ferric Chlorine and Sodium Hydroxide Piping Systems:
1. Primary and secondary piping:
   a. Piping:
      1) CPVC, ASTM F441.
      2) Schedule 80, ASTM F441.
   b. Fittings:
      1) CPVC, ASTM F439.
      2) Schedule 80, ASTM F439.
2. Joints: Solvent welded, ASTM D2564 and ASTM D2855."

Section 15115 – Water Control Gates

Article 1.1 A.2.

DELETE

Delete in its entirety.

Article 2.2

DELETE

Delete in its entirety.

Article 2.3 B.

CHANGE TO READ

"B. Materials:
1. Materials subject to dezincification or dealuminization prohibited.
2. "L" grades for all welded components.
3. Thimble, frame, guides, slide, yoke and stem guides:
   a. Stainless steel, Type 304 and Type 304L.
4. Gear housing:
   a. Cast iron, steel or ductile iron.
5. Actuator pedestal:
   a. Stainless steel, Type 316.
6. Rising stem thrust nuts:
   a. Stainless steel, Type 316.
7. Stem couplings:
   a. Stainless steel, Type 316.
8. Stem guide bushings:

a. Cast or extruded UV stabilized UHMW-PE.
9. Stems:
   a. Stainless steel, Type 316.
10. Seals:
   a. UV stabilized UHMW-PE.
11. Anchor bolts and fasteners: Stainless steel, Type 316.
12. Flush-bottom sill retainer: Stainless steel, Type 316.
13. Wedges and Pressure Pads: UV stabilized UHMW-PE if required."

Section 15440 – Plumbing Fixtures and Equipment

Article 2.2 A.1.
CHANGE TO READ
"1. Emergency shower and eye/face wash (EEWS):"

Article 2.2 A.1.e.
CHANGE TO READ
"e. Type:
   1) EEWS (freezeproof, floor-mounted, and push handle for shower and eyewash): Haws 8300 FP."

Section 16121 – Medium Voltage Cable

DELETE
Delete Specification Section in its entirety.

REVISIONS TO DRAWINGS

Drawing 00D002

CHANGE
"MAINTENANCE SHOP DEMOLITION SEE SHT 66D103"
TO READ
"MAINTENANCE SHOP DEMOLITION SEE SHT 12D104"

Drawing 12D103

NOTES
ADD
"3. FILL INSIDE OF STRUCTURE W/ ENGINEERED FILL AND COMPACTED PER SECTION 02200."

Drawing 02C105

CHANGE
"GRAVEL AREAS"
TO READ
"GRAVELLED ARES WITH 4" LAYER OF 3/4" CRUSHED ROCK."

Drawing 03C101

DELETE
"SHC INJECTION POINT, SEE SHEET 00P008"

Drawing 03C106

CHANGE
"PACKAGE PUBLIC RESTROOM"
TO READ
"PACKAGE PUBLIC RESTROOM, SEE NOTE 8"

Note
ADD
"8. SEE SHT 00L003 FOR DETAILS. CONTRACTOR TO COORDINATE ROUTING AND CONNECTION OF DRAIN AND WATER PIPING TO RESTROOM FACILITY DESIGNED PLUMBING"

Drawing 00A106

Door Schedule, Door 61-101B Remarks
CHANGE
"WITH LOUVERED TRANSOM ABOVE"
TO READ
"WITH LOUVERED TRANSOM ABOVE. WL-1, SEE SHEETS 00M001 AND 61M101 FOR SIZE"

Drawing 14A102

Keynotes 3 and 4
CHANGE TO READ
"NOT USED"

Drawing 31S102

ADD
"NOTE 1. PROVIDE CONCRETE WALL CLOSURES ON NORTH AND SOUTH CHANNEL WALLS OF ZONES 1A, 1B, 1E, 2A, 2B, AND 2E, TYP OF 92."

Drawing 41S103

NOTE
CHANGE
"SEE SPECIFICATIONS FOR SUBGRADE REQUIREMENTS"
TO READ
"SEE SPECIFICATIONS FOR SUBGRADE REQUIREMENTS. PROVIDE ENGINEERED FILL BETWEEN EXISTING DEMOLISHED STRUCTURE AND BOTTOM OF CLARIFIER."

Drawing 61S102

Note

ADD

"16. BRICK VANEER ON SOUTH WALL SHALL BE PROVIDED TO THE EXTENT SHOWN ON 61A104."

Drawing 00P02

Detail 2 - NOTE

CHANGE

"1 1/2" MINIMUM ALL AROUND SEE NOTE"

TO READ

"18" MINIMUM ALL AROUND SEE NOTE"

Drawing 32P103

CHANGE

"32SLG201"

TO READ

"32G201"

CHANGE

"32SLG101"

TO READ

"32G101"

Drawing 32P104

CHANGE

"32SLG201"

TO READ

"32G201"

CHANGE

"32SLG101"

TO READ

"32G101"

CHANGE

"31SLG215"

TO READ

"31G218"

Drawing 32P105

CHANGE

"32SLG201"

TO READ

"32G201"

CHANGE
"32SLG101"
TO READ
"32G101"

Drawing 32P106

CHANGE
"32SLG201"
TO READ
"32G201"
CHANGE
"31SLG118"
TO READ
"31G218"

Drawing 64P102

Section B
CHANGE
"316 SS TYPE 1 PIPE SUPPORT, ATTACH TO STRUCTURE PER COVER MFR RECOMMENDATIONS"
TO READ
"MANF SHALL PROVIDE SUPPORT MEMBER BETWEEN EDGE OF THICKENER AND STILLING WELL FOR SUPPORT OF PIPE. COORDINATE WITH SKIMMER MECHANISM"

Drawing 00E012

Primary Scum Pump 23PMP001
CHANGE
"5 HP"
TO READ
"7.5 HP"

End of Addendum

Clean Water

State Revolving Fund

Non-destructive Screening of Interior /Exterior Painted Surfaces

XRF Readings

Site Location: Pinole / Hercules W.P.C., Pinole, California
Building: Interior & Exterior
Inspector: Bob Gerhold Date: October 8, 2014

Location	Component	Wall	Substrate	Color	Paint Condition	Reading (mg/cm2)
Calibration 1						1.0
Calibration 2						1.0
Calibration 3						1.0
Headworks & Maint. Shop						
Exterior	Wall	East	Brick	Red	Intact	0.0
	Wall	East	Brick	Red	Intact	0.0
	PG&E equipment	East	Metal	Gray	Intact	0.0
	Wall	South	CMU	White	Intact	0.0
	Wall	West	CMU	White	Intact	0.0
	Wall	North	CMU	White	Intact	0.0
	Window frame	South	Metal	Brown	Intact	0.0
	Door frame	West	Metal	Brown	Intact	1.4
	Door frame	West	Metal	Brown	Intact	0.2
	Door	West	Metal	Brown	Intact	0.0
	Door	West	Metal	Brown	Intact	0.0
	Roll-up door frame	West	Metal	Brown	Intact	0.4
	Roll-up door	West	Metal	Brown	Intact	0.0
	Handrail	North	Metal	Silver	Intact	0.0
	Handrail	North	Metal	Silver	Intact	0.0
	Wall to lower level	North	Concrete	White	Damaged	0.0
	Wall to lower level	North	Concrete	White	Intact	0.1
	Containment wall @ tanks	North	Concrete	White	Intact	0.0
	Containment wall @ tanks	North	Concrete	White	Intact	0.0
	Tanks	East	Plastic	White	Intact	0.0
	Tanks	East	Plastic	White	Intact	0.0
Interior	Shop floor		Concrete	Gray	Intact	0.0
	Shop floor		Concrete	Gray	Intact	0.0
	Shop wall		CMU	White	Intact	0.0
	Shop wall		CMU	White	Intact	0.0
	Shop hoist supports		Metal	Gray	Intact	6.0
	Shop hoist supports		Metal	Gray	Intact	4.5
	Shop ceiling		Concrete	White	Intact	0.0
	Shop ceiling		Concrete	White	Intact	0.0
	HW wall		Drywall	White	Intact	0.0
	HW wall		Drywall	White	Intact	0.0
	HW wall		CMU	White	Intact	0.0
	HW wall		CMU	White	Intact	0.0
	HW floor		Concrete	Red	Intact	0.0
	HW ceiling		Concrete	White	Intact	0.0
	HW ceiling		Concrete	White	Intact	0.0
	HW cabinet		Metal	Blue	Intact	0.2
	HW handrail		Metal	Black	Damaged	0.0
	HW handrail		Metal	Black	Intact	0.0
	HW middle level walls		Concrete	White	Intact	0.0
	HW middle level walls		Concrete	White	Intact	0.0
	HW GE Motors		Metal	Blue	Intact	0.0
	HW GE Motors		Metal	Blue	Intact	0.0

Non-destructive Screening of Interior /Exterior Painted Surfaces

XRF Readings

Site Location: Pinole / Hercules W.P.C., Pinole, California
Building: Interior & Exterior
Inspector: Bob Gerhold Date: October 8, 2014

Location	Component	Wall	Substrate	Color	Paint Condition	Reading (mg/cm2)
Interior (con't)	HW GE Motors frame		Metal	Blue	Intact	0.0
	HW GE Motors frame		Metal	Blue	Intact	0.0
	HW lower level equipment		Metal	Blue	Intact	0.0
	HW lower level equipment		Metal	Blue	Intact	0.0
	HW lower level equip fr		Metal	Gray	Intact	0.0
	HW lower level equip fr		Metal	Gray	Intact	0.0
	HW lower level floor		Concrete	Gray	Intact	0.0
	HW lower level floor		Concrete	Gray	Intact	0.0
Primary Clarifier #3	Wall		Concrete	White	Intact	0.0
	Wall		Concrete	White	Intact	0.0
	Wall		Concrete	White	Intact	0.0
	Piping under stairs		Metal	Black	Intact	1.4
	Stair stringer		Metal	Silver	Intact	0.0
	Platform framing		Metal	Black	Intact	0.0
	Equipment		Metal	Blue	Intact	0.0
	Mechanical pit piping		Metal	Black	Intact	1.2
	Mechanical pit piping		Metal	Black	Intact	1.4
	Mechanical pit equipment		Metal	Blue	Intact	0.0
	Mechanical pit equipment		Metal	Blue	Intact	0.0
	Mechanical pit equip frame		Metal	Black	Intact	0.0
	Mechanical pit equip frame		Metal	Black	Intact	0.0
	Mechanical pit wall		Concrete	White	Intact	0.0
	Mechanical pit wall		Concrete	White	Intact	0.0
Secondary Clarifier #2	Wall		Concrete	White	Intact	0.0
	Wall		Concrete	White	Intact	0.0
	Platform framing		Metal	Black	Intact	0.4
	Platform framing		Metal	Black	Intact	0.2
	Equipment		Metal	Blue	Intact	0.0
	Equipment		Metal	Blue	Intact	0.0
	Wheel		Metal	Black	Intact	0.3
	Platform base		Metal	Black	Intact	0.3
	Platform base		Metal	Black	Intact	0.4
Secondary Clarifier #1	Wall		Concrete	White	Intact	0.0
	Wall		Concrete	White	Intact	0.0
	Platform framing		Metal	Black	Intact	0.3
	Platform framing		Metal	Black	Intact	0.3
	Equipment		Metal	Blue	Intact	0.0
	Equipment		Metal	Blue	Intact	0.0
	Platform base		Metal	Black	Intact	0.2
	Platform base		Metal	Black	Intact	0.3
	Wheel		Metal	Black	Intact	0.4
	Mechanical pit wall		Concrete	White	Intact	0.0
	Mechanical pit wall		Concrete	White	Intact	0.0
	Mechanical pit piping		Metal	Black	Intact	1.6
	Mechanical pit piping		Metal	Black	Intact	1.7
	Mechanical pit equipment		Metal	Blue	Intact	0.0
	Mechanical pit equipment		Metal	Blue	Intact	0.0
	Mechanical pit equipment		Metal	Blue	Intact	0.0

Non-destructive Screening of Interior /Exterior Painted Surfaces

XRF Readings

Site Location: Pinole / Hercules W.P.C., Pinole, California
Building: Interior & Exterior
Inspector: Bob Gerhold Date: October 8, 2014

Location	Component	Wall	Substrate	Color	Paint Condition	Reading (mg/cm2)
Secondary Clarifier	Wall		Concrete	White	Intact	0.0
Distribution Box	Wall		Concrete	White	Intact	0.0
	Railing		Metal	Silver	Intact	0.0
	Railing		Metal	Silver	Intact	0.0
Solids Handling Structure &	Wall		Concrete	White	Intact	0.0
Associated Tank	Wall		Concrete	White	Intact	0.0
	Tank wall		Concrete	White	Intact	0.0
	Tank wall		Concrete	White	Intact	0.0
	Tank piping		Metal	White	Intact	0.0
	Tank piping		Metal	White	Intact	0.0
	Equipment		Metal	Peach	Intact	0.0
	Equipment		Metal	Peach	Intact	0.0
	Platform		Metal	Peach	Intact	0.0
	Platform stairs		Metal	Peach	Intact	0.0
	Equipment framing		Metal	Black	Intact	0.0
	Equipment framing		Metal	Black	Intact	0.0
	Mechanical pit piping		Metal	Black	Intact	0.0
	Mechanical pit piping		Metal	Black	Intact	0.0
	Mechanical pit equipment		Metal	Blue	Intact	0.0
	Mechanical pit equipment		Metal	Blue	Intact	0.0
Caustic Storage Tank	Tank wall		Fiberglass	White	Intact	0.0
	Tank wall		Fiberglass	White	Intact	0.0
	Tank supports		Metal	Black	Intact	0.0
	Tank supports		Metal	Black	Intact	0.0
Public Works Storage Bldg.	Structural supports		Metal	Brown	Intact	0.0
	Structural supports		Metal	Brown	Intact	0.0
	Structural supports		Metal	Brown	Intact	0.0
	Wall		Wood	Brown	Intact	0.0
	Wall		Metal	Tan	Intact	0.0
	Wall		Metal	Tan	Intact	0.0
	Hoist		Metal	Orange	Intact	2.1
	Exterior siding		Metal	Brown	Intact	0.0
	Exterior siding		Metal	Brown	Intact	0.0
Calibration 4						1.0
Calibration 5						1.0
Calibration 6						1.0

SECTION 11120

PRIMARY CLARIFIER AND GRAVITY THICKENER: CIRCULAR GENERAL REQUIREMENTS

PART 1 - GENERAL

1.1 SUMMARY

A. Section Includes:
   1. General requirements that apply to scrapper type sludge collection and thickening equipment specified in other sections of these Specifications.
      a. Primary Clarifiers (Three Each).
      b. Gravity Thickener (One Each).

1.2 QUALITY ASSURANCE

A. Referenced Standards:
   1. American Bearing Manufacturers Association (ABMA):
      a. ABMA 9, Load Ratings and Fatigue Life for Ball Bearings.
   2. American Gear Manufacturers Association (AGMA):
      a. 6010-E, Standard for Spur, Helical, Herringbone, and Bevel Enclosed Drives.
      b. 6034-B, Practice for Enclosed Cylindrical Wormgear Speed Reducers and Gear motors.
      c. 2001-D, Fundamental Rating Factors and Calculation Methods for Involute Spur and Helical Gear Teeth.
   3. American Institute of Steel Construction (AISC):
      a. Manual of Steel Construction.
   4. American Iron and Steel Association (AISI):
      a. Steel Products Manual.
      b. American Iron and Steel Institute Manual.
   5. American Welding Society (AWS).
   6. National Electrical Manufacturers Association (NEMA):
      a. 250, Enclosures for Electrical Equipment (1000 Volt Maximum).
   7. US Department of Labor, Occupational Health and Safety Administration (OSHA).

B. Qualifications:
   1. Utilize only American Welding Society (AWS) certified welders.
   2. Manufacturer experience:
      a. Minimum five (5) similar clarifier mechanism installations with diameters greater than or equal to 90 percent of the diameter of this specified clarifier.
      b. Supplied similar equipment for the past 10 years.
      c. The mechanism shall be a standard production product of the manufacturer.

C. Independent Design Evaluation of Drive:
   1. Clarifier manufacturer to submit the following information for the proposed drive unit to an independent AGMA member engineer for design evaluation:
      a. Complete drive assembly fabrication drawings.
      b. Drive component drawings and/or brochures for all drive components.
      c. Manufacturer and model of all drive components.
      d. Gear and pinion interval specifications, including all heat-treating procedures.
      e. AGMA calculations for drive components.
      f. Additional information needed to completely evaluate proposed drive assembly.

1.3 SUBMITTALS

A. Shop Drawings:
   1. See Specification Section 01340 for requirements for the mechanics and administration of the submittal process.

2. Submit complete erection, installation, operation and maintenance information provided by the manufacturer.
3. Submit, as a minimum, complete construction details, materials of construction, drawings of sludge collection and skimmer mechanisms, gears, gear reducers, center column, diffuser and influent wells, platform, walkway, motor, electrical diagrams, and other pertinent information.
4. Submit copy of torque test results to Engineer.
5. Submit statement and supporting calculations signed by a California registered professional Structural Engineer that all members have been designed to support the loadings as specified.
6. Submit manufacturer, model and certification of compliance to ABMA 9 bearing life.
7. Submit copy of report verifying completion of start-up and related field services.
8. Submit any special instructions for unloading at the jobsite, handling, storage and routine maintenance prior to installation and startup.

B. Miscellaneous Submittals:
1. Main drive speeds.
2. Size, make and type of electric motors and drive systems.
3. AGMA rated alarm, stall and ultimate torque capabilities.
4. Details of any revision necessary to adapt the piping, structural, electrical and instrumentation design to the equipment proposed.
5. Manufacturer must submit center column calculations.
6. Manufacturer must submit calculations verifying the output torque rating of the drive selected. Calculation will include all spur gears and pinions in the drive train.
7. Calculations and details must bear the stamp of a California registered professional engineer.
8. Calculations of uniform sludge withdrawal and sludge withdrawal system head loss.
9. Structural calculations signed and stamped by California registered professional engineer.

C. Operation and Maintenance Manuals:
1. See Specification Section 01342 for requirements for the mechanics and administration of the submittal process.

1.4 DELIVERY, STORAGE, AND HANDLING

A. See Section 01600.

B. Factory Assembly:
1. Assemble each mechanism in factory to ensure proper fit of parts. Mark parts with erection marks.
2. Disassemble mechanism into largest sections allowed by carrier regulations for shipment.

1.5 PROJECT CONDITIONS

A. Equipment suitable for installation in raw sewage.

B. Wastewater Temperature: 60 to 80 DegF.

C. Ambient Temperature: 25 to 110 DegF.

PART 2 - PRODUCTS

2.1 ACCEPTABLE MANUFACTURERS

A. Subject to compliance with the Contract Documents, the following manufacturers are acceptable:
1. Ovivo.
2. Westech.
3. Clearstream.
4. Evoqua.

5. Or approved equal.

B. All equipment included in Section 11120 and Section 11125 shall be supplied by same manufacturer.

2.2 MATERIALS

A. General:
1. Materials to be considered for construction of the clarifier mechanisms will be stainless steel construction as specified herein.
   a. Stainless steel plate, pipe, rod and rolled structural shapes shall be of the austenitic stainless steel type, AISI Type 316L (UNSS30403).
   b. Dual-certified 316/316L type may be used if it complies with all requirements of 316L.
   c. The welding electrodes for welding Type 316L stainless steel shall be either AWS 5.4E308L covered welding electrode or AWS 5.9ER308L bare welding electrode type, or equivalent filler metal.
   d. Autogenous welding of stainless steel is not allowed.
2. Ensure structural members and connections are designed so that the unit stresses will not exceed 100 percent of AISC allowable stresses when subjected to cutout torque and/or field torque test, whichever is higher.
3. For any axis parallel to bending action, size compression members not to exceed a slenderness ratio of 200 and size tension members not to exceed a slenderness ratio of 240.

B. Structural Design:
1. Maximum ratio of unbraced length to least radius of gyration (slenderness ratio).
   a. Compression members: 200.
   b. Tension members: 240 (for angle about the Z-Z axis).

2.3 EQUIPMENT

A. Primary Clarifier No. 1, No. 2 and No. 3 Performance Requirements:
1. Tank dimensions: 45 FT - 0 IN DIA.
2. Side water depth of new clarifier: 14 FT - 0 IN.
3. Minimum freeboard at maximum flow of new clarifier = 1.5 FT.
4. Influent column inside diameter:
   a. Primary Clarifier No. 1: 14 IN.
   b. Primary Clarifier No. 2: 18 IN.
   c. Primary Clarifier No. 3: 18 IN.
   d. Outlets: 4 at minimum 16 IN wide by minimum 18 IN water depth and minimum 28 IN overall depth.
5. AGMA 20 year continuous rated running torque applied at output of drive unit: 16,000 FT-LBS minimum.
6. Stall or motor cut-out torque: 2 times continuous torque.
7. AGMA yield torque applied at output of drive unit: 2 times continuous torque.
8. Minimum turntable ball race diameter: 30 IN.
9. Minimum internal spur gear pitch diameter: 26 IN.
10. Minimum drive motor horsepower: 3/4 HP.
11. Maximum drive motor speed: 1,800 rpm.
12. Drive output speed: Maximum 0.04 rpm (maximum 12 fpm tip speed).
13. Drive pinion: Single.
14. Minimum spur gear face width: 2.5 IN.
15. Flocculating feed well:
    a. Size: 14 FT DIA.
    b. Depth below water surface: (New clarifier).
       1) Primary Clarifier No. 1: 3 FT.
       2) Primary Clarifier No. 2: 3 FT.
       3) Primary Clarifier No. 3: 6 FT
    c. Thickness: Minimum 3/16 IN.

16. Influent head loss at maximum flow: 3 IN.
17. Thickness of all submerged stainless steel members: 1/4 IN minimum.
18. Mechanism rotation: Clockwise.

B. Structural Design:
1. Maximum ratio of unbraced length to least radius of gyration (slenderness ratio):
   a. Compression members: 120.
   b. Tension members: 240 (for angle about the Z-Z axis).
2. Maximum unit stress: 1.333 times AISC allowable stresses at all structural members when subject to twice the drive torque.
3. Design shall account for flocculation baffles per Section 11151.

C. Process Parameters:
1. The following data to be used to calculate clarifier components (per clarifier):

	AVERAGE DRY WEATHER	PEAK WET WEATHER
Influent flow (w/o RAS), mgd	1.4	4.0
Return sludge flow, mgd	0.25	0.25
Influent total suspended solids, mg/L	80 – 400	80 - 400

D. Gravity Thickener Performance Requirements:
1. Tank dimensions: 40 FT – 0 IN DIA.
2. Side water depth: 10 FT – 0 IN.
3. Minimum freeboard at maximum flow of new clarifier = 3.5 FT.
4. AGMA 20 year continuous rated running torque applied at output of drive unit: 20,000 FT-LBS minimum.
5. Stall or motor cut-out torque: 2 times continuous torque.
6. AGMA yield torque applied at output of drive unit: 2 times continuous torque.
7. Minimum turntable ball race diameter: 30 IN.
8. Minimum internal spur gear pitch diameter: 26 IN.
9. Minimum drive motor horsepower: 3/4 HP.
10. Maximum drive motor speed: 1,800 rpm.
11. Drive output speed: Maximum 0.04 rpm (maximum 12 fpm tip speed).
12. Drive pinion: Single.
13. Minimum spur gear face width: 2.5 IN.
14. Stilling well:
    a. Size 8 FT DIA.
    b. Thickness: Minimum 3/16 IN.
15. Influent head loss at maximum flow: 3 IN.
16. Thickness of all submerged stainless steel members: 1/4 IN minimum.

E. The following data to be used to calculate gravity thickener components:

	Maximum Month
Influent flow, gpm	310
Influent total suspended solids, mg/L	3,835

2.4 COMPONENTS

A. Drive Unit:
1. Provide TEFC motor, premium efficiency, 230/460 volt, 3 phase, 60 Hertz, 1.15 SF..
2. Reducer designed for AGMA Class II service rating.

3. Load shall not exceed the motor nameplate ampere rating at any operating condition at or below the stall torque of the mechanism.
4. Provide motor with manufacturer's standard insulation, a 45 DegC ambient temperature rating and for continuous duty.
5. Main drive AGMA yield torque: 2 times continuous torque.

B. Overload Device:
1. Provide normally open contact which closes at 80 percent of the design running torque for alarm activation.
2. Provide a normally closed contact which opens at 100 percent of the design running torque for motor shutdown.
3. Provide a normally closed contact or slip clutch which activates at 120 percent of the design running torque.
4. Provide visual torque indicating device mounted on drive calibrated from 0 to 160 percent of the design running torque to indicate loading at all times during operation.

C. Shear Pins:
1. Provide shear pin device set for 125 percent of AGMA rated torque or third switch.
2. For shear pin, provide straight or necked shear pins.

2.5 FABRICATION

A. Center Pier (for clarifiers):
1. Fabricate center pier of cylindrical stainless steel with diameters called out in Article 2.3 A.4. by minimum 3/8 IN wall thickness.
2. Provide flanged base for anchor bolting to concrete base of clarifier as shown on Drawings.
   a. Provide water tight connection seal.
   b. Minimum of twelve (8) anchor bolts of at least 1 IN DIA.
3. Provide a flanged top and stiffeners for supporting the sludge collection mechanism, the drive mechanism, drive-mounting plate, access platform, and the access bridge.
4. Provide a drive mechanism mounting plate set plumb with the centerline of the center pier.
5. Provide center pier which serves as an influent pipe and has a minimum of 4 equally-spaced ports at the upper end to direct the flow into the flocculation well at a velocity less than 1 fps.
6. Provide easily accessible and removable plate near the bottom of the center pier for draining center pier.
   a. Opening shall be large enough to insert a submersible pump to dewater the clarifier influent pipe.
   b. Removable plate shall provide a clear square opening not less than 18 IN by 18 IN.
   c. The opening shall be reinforced as needed to handle the imposed loads on the center pier.

B. Flocculating Feedwell:
1. Fabricate from 3/16 IN minimum stainless steel plates.
2. The feedwell shall be located outside the influent pipe to diffuse the liquid into the tank without disturbance or formation of velocity currents.
3. Support the feedwell from drive cage above water level.
   a. Locate feedwell structural members on the outside of the feedwell to provide smooth interior.
4. Feedwell shall project 6 IN above water surface minimum.
5. Flocculation baffles for the clarifiers will be supported from the flocculation well (see Section 11150).
6. Provide baffled openings in well at liquid level to allow release of scum in a tangential direction.
   a. Minimum 6 openings.

C. Center Drive Cage:
1. All-welded stainless steel construction.

2. Transmit torque from drive unit to rotating components by the drive cage. DO NOT transmit any torque to the access bridge.
3. Design drive cage for clarifiers to encompass center column and transmit and/or carry all torques without overstressing members.
4. Design adjustable connection between drive unit and drive cage to provide for proper alignment and allowance for structural tolerances.
5. Center drive cage of gravity thickener shall be supported from the bridge.

D. Truss Arms:
1. All welded stainless steel construction.
2. Rigidly braced structural truss arms rigidly supported by the center drive cage.
3. Design truss arms to transmit all torques to the center cage without overstressing members.
4. Use of the rods/turn buckles not allowed.

E. Drive Mechanism:
1. Fabricate drive components in accordance with AGMA 6010-E and AGMA 6034-B and AGMA 2001-D, or AGMA 2001-C95 for 24 HR continuous duty and 20-year design life based on rated AGMA torque. Design bearing for an ABMA 9 life of 200,000 HRS.
2. Completely factory assembled.
3. Exposed gearing is not acceptable.
4. The design must allow for servicing without removing the bridge.
5. Wormgear drive:
   a. Provide drive mechanism consisting of a primary gear reduction unit, an intermediate reduction unit, plus a final reduction unit consisting of a pinion and internal gear enclosed in a turntable base.
   b. Enclose all gearing in a cast iron housing.
   c. Provide all bearings of anti-friction type and running in oil.
   d. Provide totally enclosed ball bearing motor of ample power for starting and continuously operating the mechanism without overloading.
      1) The motor shall conform to NEMA standards and be 230/460 V, 3 PH, 60 Hz.
      2) Motor shall be a minimum of 3/4 HP.
      3) Motor shall comply with NEMA MG 1, Design B and shall be totally enclosed with Class B insulation designed for continuous duty outdoor service.
   e. Primary reduction unit:
      1) Provide a primary reduction unit which drives the intermediate reduction unit through a chain and sprocket arrangement.
      2) Furnish drive chain of #80L self-lubricated roller chain.
      3) Provide an adjustable base mounted on the intermediate reduction unit for chain tension adjustments.
      4) Direct coupled cycloidal reducers are also acceptable.
   f. Intermediate reduction unit:
      1) Provide an intermediate reduction unit consisting of a cast iron housed worm gear speed reducer, with grease and oil lubricated, anti-friction type bearings and service factor of 1.25.
      2) Mount the unit on a machined face on the top of the final reduction unit and properly aligned to maintain accurate centers for the final reduction gearing.
      3) Worm assembly worm and shaft of a heat treated alloy and integral construction and the worm gear of cast manganese bronze, aluminum bronze or ductile iron.
      4) Direct coupled cycloidal reducers are also acceptable.
   g. Final reduction unit:
      1) Provide internal gear drive by a heat-treated pinion from the slow speed shaft of the primary gear reducer. Construct the main pinion of heat treated AISI series alloy steel, machined after heat treatment. Support pinion at both top and bottom by a taper roller bearing assembly. Use one-piece pinion shaft construction without an intermediate coupling.
      2) Provide ductile iron internal gear and pinion of AGMA quality 6 minimum.

3) Provide internal gear design to support center cage and collector.

h. Turntable base:

1) Provide turntable base with annular raceway to contain balls on which the internal gear rotates.
2) Furnish ball race without guide shoes and steady bearings.
3) Furnish ball bearings of alloy steel bearing vertically and horizontally on four removable liner strips pressed into annular raceways in turntable base and internal gear.
   a) Liner strips shall be minimum 3/8 IN thickness.
4) Protect internal gear, pinion and ball race by a seal and dust shield.
5) Internal gear, pinion and ball race is to run in oil bath.
6) Furnish turntable base bolted to the center column and designed to support the internal gear with rotating mechanism and access platform.
7) Provide a pipe attached to bottom of turntable base for condensate removal.
8) Furnish oil piping which terminates within the center of the base. Provide oil level sight glass and drain.
9) Fully contoured precision gear/bearing sets are also acceptable.

F. Platform and Walkway:

1. Walkway:
   a. Provide minimum clear walkway width of 3 FT at clarifiers.
   b. Fabricate walkway at clarifiers of 1-1/2 IN deep serrated aluminum grating.
   c. Provide minimum clear walkway width of 4 FT at gravity thickener.
      1) Fabricate walkway of 304L stainless steel checkered plate.
2. Operating platform:
   a. Provide platform for access to and around the drive mechanism.
   b. Provide minimum clear space at least 3 FT wide around the drive unit.
   c. Fabricate platform of 3/8 IN aluminum checkered plate.
3. Include lift-out sections where required for routine maintenance of equipment.
4. Guardrail:
   a. Fabricate handrail of triple rail, 1-1/2 IN DIA Schedule 40 aluminum, 42 IN height.
   b. Provide a 3/16 IN thick by 4 IN high aluminum kickplate around platform and walkway.
5. Support walkway and operating platform from the center column and the tank wall for the clarifiers and from the walls at the gravity thickener.
6. Design walkway and platform to withstand a live load of 50 LBS/SQ FT.
   a. Deflection shall not exceed L/360 when the dead load and live load are applied.
   b. Brace against lateral movement using wind load of 50 LBS/SF.

G. Scum Removal System:

1. Scum skimmers assembly:
   a. Include skimmers, wiper assembly, beaching assembly, and scum trough and discharge piping.
   b. Provide one (1) rotating scum skimmer arm per basin.
   c. Mount skimmers tangentially to influent well and support entire weight on sludge collector truss.
   d. Do not support the skimmer on the scum baffle.
   e. Design skimmer to collect and move scum the full distance between the flocculating center well and scum baffle.
   f. Provide wiper assembly with neoprene wiping edge attached to hinged steel blade, designed to sweep scum up beaching plate and into scum trough.
   g. Ramp crest of scum trough to be at same elevation as top of scum baffles.
   h. Support wiper assembly at its outer end while traveling across scum trough.
2. Scum box:
   a. Size: 3 FT long by 6 FT wide.
   b. Support from tank wall.

c. Connect to scum withdrawal pipe.
d. Assembly shall include:
   1) Scum trough.
   2) Vertical stainless steel sides.
   3) Sloping ramp.
   4) Supports and bracing.
e. Provide flexible connector for connection to scum withdrawal pipe.
f. Scum withdrawal piping as shown on Drawings.

3. Provide single full radius skimmer arm in gravity thickener to operate within the effluent weir and the stilling well.

2.6 SOURCE QUALITY CONTROL

A. Assemble the complete drive in the manufacturer's shop and test to assure the drive is running properly and to calibrate the drive control.
   1. Send a completed test report to the Engineer verifying the drive meets the quality assurance of manufacturer and engineer.

B. Provide evidence of compliance with requirements for the following:
   1. Referenced standards.
   2. Welder certifications.
   3. List of similar scope and size projects.
   4. Provide evidence of compliance with PART 2 requirements for the following:
   5. Structural members and connections are designed so that unit stresses do not exceed the specified percent of AISC allowable stresses.
   6. Compression and tension member slenderness ratios do not exceed the specified ratios.

C. Provide evidence in the form of field test that the design used by the manufacturer is capable of uniform sludge withdrawal from the entire tank bottom (based on floor area swept).

2.7 MAINTENANCE MATERIALS

A. Two sets shaft seals for drive unit.

B. One skimmer wiper for each skimmer arm.

C. Two sight glasses.

D. Six shear pins.

E. Two sets of manifold seals for the suction headers.

PART 3 - EXECUTION

3.1 INSTALLATION

A. Install clarifier equipment according to manufacturer's recommendations.

B. Install as required by the weirs and baffles manufacturer and in accordance with the contract documents.

C. Where weir plates or scum baffle plates are non-standard length or non-standard mounting hole configuration, such machined or cut edges shall be resin sealed with manufacturer's seal mix.

D. Weirs and baffles shall be carefully aligned and leveled to the elevations shown on the Drawings. In the completed installation, no variation greater than 1/8 in shall exist between any two notches of the weir plate in any one tank. In addition, the average deviation from one quadrant of the weir to any other shall not exceed 1/16 IN. Weir elevation shall be verified once the tank is filled. Caulking compound shall be used to completely prevent flow of liquid up between the concrete weir and the weir plate.

E. For identification and tagging, comply with Section 10400.

3.2 PAINTING

A. Manufacturer shall prime paint the equipment in accordance with Section 09905.

B. Contractor to prepare (including field blasting) and paint clarifier mechanism in accordance with Section 09905.

C. The drive mechanism shall be shipped with a factory applied finish paint system in accordance with Section 09905.

D. In the event of damage, make all repairs and replacements necessary to the approval of the Engineer at no additional cost to the Owner.

E. All aluminum in contact with dissimilar materials shall be coated with Koppers Hi-Guard, two coats, 2.0 - 3.0 dry mils per coat or 3M #21, 10 mil thick insulating tape.

F. Stainless steel components shall not be coated.

3.3 FIELD QUALITY CONTROL

A. Employ and pay for services of equipment manufacturer's field service representative(s) to:
   1. Inspect equipment covered by these Specifications.
   2. Supervise adjustments and installation checks.
   3. Provide test equipment, tools and instruments necessary to accomplish equipment testing.
   4. Conduct initial startup of equipment, perform operational checks and supervise acceptance testing.
   5. Provide through Contractor a written statement that manufacturer's equipment has been installed properly, started up and is ready for operation by Owner's personnel.
   6. Provide Personnel Training for the specified minimum number of 8 hours at jobsite per Section 01650 on operation and maintenance of furnished equipment.
   7. Provide the following:
      a. For equipment inspection: 4 HRS minimum, or as needed, for each clarifier and thickener.
      b. For equipment start-up and testing: 4 HRS minimum for each clarifier and thickener.

B. Torque Test:
   1. Load test the entire collector mechanism by anchoring collector arms individually, one at a time.
      a. In successive tests, demonstrate the sludge collection mechanism's (including drive unit, cage, gears and structures) capability to withstand not less than 130 percent of the specified rated running torque.
   2. Field torque test the clarifier and thickener mechanisms under the supervision of the equipment manufacturer's representative before the mechanisms are approved and placed into operation.
   3. The torque test shall consist of securing the rake arms by cables to anchor bolts installed by the Contractor in the tank floor at locations recommended by the manufacturer and the Engineer.
      a. Apply a torque load to the scraper arm by means of a ratchet lever and cylinder connected to the cable assembly.
   4. Measure the magnitude of the applied load by calculating the torque from the distance of the line of action of each cable to the centerline of the mechanism.
      a. Readings shall be taken at 100 percent and 120 percent of the AGMA rated torque.
      b. The test load shall be applied and noted on the torque overload device.
   5. The manufacturer's service representative shall certify that the alarm and motor cut-out torque of the drives as calibrated in the manufacturer's shop are in proper operation to shut down the units as specified.

C. Operation Test:
   1. Fill clarifier to its operating level with clean water and operate mechanism continuously for a period of not less than 48 HRS.

a. At no time during the operating tests shall the equipment exceed 100 percent the design running torque or exhibit indications of binding or uneven operation.
b. Record torque values as registered on the drive mechanism torque indicator and motor amperage (all three (3) phases) at 3 HR intervals.

2. After successful completion of the fully submerged operating test, operate the mechanism with no more than 1.5 FT of water in the tank for a period of not less than 6 HRS.
   a. Record data as described above.
3. If the mechanism exceeds rated torque or, in the opinion of the Owner, the mechanism exhibits indications of binding or improper adjustment, then:
   a. Contractor shall immediately halt the tests and remedy the problem.
   b. Repeat the tests after completion of necessary repairs or adjustments.
   c. Failure to successfully complete the test in three (3) attempts is sufficient cause for rejection.

END OF SECTION

SECTION 11125
SLUDGE COLLECTION: CIRCULAR SUCTION-TYPE

PART 1 - GENERAL

1.1 SUMMARY

A. Section Includes:
   1. Design, fabrication, and installation and testing requirements for:
      a. Secondary clarifiers circular suction type sludge collection.

1.2 QUALITY ASSURANCE

A. Referenced Standards:
   1. Aluminum Association (AA):
      a. ASD 1, Aluminum Standards and Data.
   2. American Bearing Manufacturers Association (ABMA):
      a. ABMA 9, Load Ratings and Fatigue Life for Ball Bearings.
   3. American Gear Manufacturers Association (AGMA):
      a. 2001-D, Fundamental Rating Factors and Calculation Methods for Involute Spur and Helical Gear Teeth.
      b. 6034-B, Practice for Enclosed Cylindrical Wormgear Speed Reducers and Gearmotors.
   4. American Institute of Steel Construction (AISC):
      a. 325, Manual of Steel Construction.
   5. ASTM International (ASTM):
      a. A36, Standard Specification for Carbon Structural Steel.
      b. A48, Standard Specification for Gray Iron Castings.
      c. A276, Standard Specification for Stainless Steel Bars and Shapes.
      d. A536, Standard Specification for Ductile Iron Castings.
      e. E18, Standard Test Methods for Rockwell Hardness and Rockwell Superficial Hardness of Metallic Materials.
   6. American Welding Society (AWS):
      a. D1.1, Structural Welding Code – Steel.
   7. National Electrical Manufacturers Association (NEMA):
      a. 250, Enclosures for Electrical Equipment (1000 Volts Maximum).
      b. MG 1, Motors and Generators.
   8. Occupational Safety and Health Administration (OSHA).
   9. Society of Automotive Engineers (SAE):
      a. AMS 6440M, Steel. Bars, Forgings, and Tubing 1.45Cr (0.98 1.10C) (SAE 52100) For Bearing Applications.

B. Qualifications:
   1. Comply with AWS D1.1 procedures and practices.
   2. Manufacturer experience:
      a. Minimum five (5) similar clarifier mechanism installations with diameters greater than or equal to 90 percent of the diameter of this specified clarifier.
      b. Supplied similar equipment for the past 10 years.
      c. The mechanism shall be a standard production product of the manufacturer.

C. Independent Design Evaluation of Drive:
   1. Clarifier manufacturer to submit the following information for the proposed drive unit to an independent AGMA member engineer for design evaluation:
      a. Complete drive assembly fabrication drawings.
      b. Drive component drawings and/or brochures for all drive components.
      c. Manufacturer and model of all drive components.
      d. Gear and pinion interval specifications, including all heat-treating procedures.

e. AGMA calculations for drive components.
f. Additional information needed to completely evaluate proposed drive assembly.

1.3 SYSTEM DESCRIPTION

A. Provide single source coordination responsibility through the manufacturer for the complete sludge collection system.

1.4 SUBMITTALS

A. Submit the following with the Proposal:
1. Proposal data sheets.
2. Clarifier mechanism drawings for column support, sludge withdrawal and scum collection.
3. Sufficient data to verify compliance with specifications and to illustrate construction or assembly of the product.

B. Shop Drawings:
1. See Specification Section 01340 for requirements for the mechanics and administration of the submittal process.
2. Product technical data including:
a. Acknowledgement that products submitted meet requirements of standards referenced.
b. Manufacturer, model and type.
c. Complete erection, installation, operation and maintenance information provided by the manufacturer.
d. Complete construction details, materials of construction, drawings of mechanisms, gears, gear reducers, bridge, electrical wiring diagrams, control wiring diagrams, scum box and scum baffle supports, and other pertinent information.
e. Catalog cutsheets for purchase subcomponents.
f. Submit evidence of compliance with Article 2.7 requirements, including:
1) Reference standards.
2) Independent evaluation of drive.
3) Structural design requirements.
g. Main drive speed.
h. Size, make, and type of electric motor and drive system.
i. AGMA rated alarm, stall, and ultimate torque capabilities.
j. Details of any revision necessary to adapt the piping, structural, electrical and instrumentation design to the equipment proposed.
k. Manufacturer, model and certification of compliance to ABMA 9 bearing life.
l. Certification report from AGMA engineer confirming that equipment design meets referenced AGMA standards.
m. Statement signed by a California registered professional Structural Engineer that all members including items 1.4 B.2.n.1) and 2) have been designed to support the loadings as specified.
n. For-information-only calculations as follows:
1) Center column and bridge support calculations.
2) Scum box support calculations.
3) Calculations showing withdrawal rates and head losses in the suction header.
4) Calculations showing equal withdrawal rates through the openings and head losses of the sludge withdrawal ring, if required by manufacturer.
o. Calculations for 1.4 B.2.n.3) and 4) and details must bear the stamp of a California registered professional Structural Engineer.

C. Operation and Maintenance Manuals:
1. See Specification Section 01342 for requirements for:
a. The mechanics and administration of the submittal process.
b. The content of Operation and Maintenance Manuals.
2. Certified as-built drawings (general arrangement and general arrangement details).
3. Erection drawings.

4. Complete bill of materials for the equipment, including the weights of all structural steel components.
5. Installation and maintenance instructions for the specific equipment including:
   a. Erection sequence.
   b. Maintenance and trouble-shooting check points.
   c. Complete lubrication procedures with recommended grades of lubricants.
6. Cut sheets for all equipment items purchased from sub-vendors.
7. Clarifier manufacturer’s recommended spare parts, specifically denoting:
   a. Wear items.
   b. Long-delivery items.
   c. All items convenient for stock as optional replacement items.

D. Informational Submittals:
   1. Manufacturer's certification regarding installation and start-up.
   2. Submit copy of field-torque test results to Engineer.
   3. Submit copy of report verifying completion of start-up and related field services.

1.5 DELIVERY, STORAGE, AND HANDLING

A. See Section 01600.

B. Factory Assembly:
   1. Assemble each mechanism in factory to ensure proper fit of parts.
   2. Mark parts with erection marks.
   3. Disassemble mechanisms including motors and drives into largest sections allowed by carrier regulations for shipment of all four clarifiers to the site for storage.

1.6 PROJECT CONDITIONS

A. Equipment suitable for installation in mixed liquor from an activated sludge process.

B. Wastewater temperature: 60 to 85 DegF.

C. Ambient temperature: 40 to 90 DegF.

PART 2 - PRODUCTS

2.1 ACCEPTABLE MANUFACTURERS

A. Subject to compliance with the Contract Documents, the following manufacturers are acceptable:
   1. Ovivo.
   2. Westech.
   3. Clearstream.
   4. Evoqua.
   5. Or approved equal.

B. All equipment included in Section 11120 and Section 11125 shall be supplied by same manufacturer.

2.2 MATERIALS

A. General:
   1. Structural members and connections:
      a. Unit stresses not to exceed 130 percent of AISC allowable stresses when subjected to cutout torque and/or field test torque, whichever is higher.
   2. Compression members:
      a. Slenderness ratio not to exceed 120 for any axis parallel to bending action.
   3. Tension members:
      a. Slenderness ratio not to exceed 240 for any axis parallel to bending action.

4. Stainless steel:
    a. Minimum yield strength of 25,000 psi and minimum tensile strength of 75,000 psi.

B. Bridge: Type 316 Stainless Steel.

C. Center Pier: Type 316 Stainless Steel.

D. Plate: Type 316 Stainless Steel, ASTM A666.

E. Structural Shapes: Type 316 Stainless Steel, ASTM A276.

F. Tube: Type 316 Stainless Steel, ASTM A269.

G. Main Spur Gear:
1. Ductile iron: ASTM A536, 100-70-83 or 80-60-03.
2. Cast iron: ASTM A48, Class 60 or 50A.

H. Main Bearings: SAE AMS 6440M, Rockwell C64, ASTM E18.

I. Worm Shaft (if used):
1. Ductile iron: ASTM A536, 80-55-06.
2. Cast alloy bronze, AISI 4140/42H.

J. Pinion and Pinion Shaft:
1. Ductile iron: ASTM A536, 80-55-06.
2. Alloy steel AISI 4150.

K. Gear Housing:
1. Gray iron, ASTM A48.

L. Shear Pins: 2017-T4, AA ASD 1, aluminum screw machine stock.

M. Shear Pin Holes: Hardened steel, Rockwell "C" 62-64, ASTM E18.

N. Turntable Base:
1. Gray iron, ASTM A48.

O. Liner Strips: Steel, Rockwell "C" 38-42, ASTM E18.

P. Plow Squeegees: 316 stainless steel, ASTM A666.

Q. Drive Dust Shield: Steel, ASTM A36.

R. Drive Seal: Felt or neoprene.

S. Lip Seals: Neoprene.

T. Submerged Fastening Hardware including Anchor Bolts: 316 stainless steel, ASTM F593.

U. Center Cage, Truss, Manifold: Type 316 Stainless Steel, ASTM A276.

V. Scum Skimmer Blade: 316 stainless steel, 16 GA, ASTM A666.

W. Scum Skimmer Wiper: Neoprene.

X. Wear Strips: Polyurethane.

Y. Scum Drop Box: 316 stainless steel, ASTM A666.

Z. Bolts, Nuts and Anchor Bolts: Stainless steel, Type 316, ASTM F593.

AA. Scum Box, Skimmer, and Scum Baffle Supports: Type 316 stainless steel.

BB. Sludge Collection Manifold: Type 316 stainless steel.

CC. Suction Header and Supports: Type 316 stainless steel.

2.3 EQUIPMENT

A. Clarifier Performance Requirements:
   1. Clarifier service category and tag number:
   2. Tank dimensions: 65 FT - 0 IN DIA.
   3. Side water depth: 18 FT - 0 IN.
   4. Minimum freeboard at maximum flow = 1.5 FT.
   5. Influent column inside diameter: 3 FT.
      a. Outlets: 4 at minimum 16 IN wide by minimum 18 IN water depth and minimum 28 IN overall depth.
   6. AGMA 20 year continuous rated running torque applied at output of drive unit: 16,000 FT-LBS minimum.
   7. Stall or motor cut-out torque: 2 times continuous torque.
   8. AGMA yield torque applied at output of drive unit: 2 times continuous torque.
   9. Minimum turntable ball race diameter: 30 IN.
   10. Minimum internal spur gear pitch diameter: 26 IN.
   11. Minimum drive motor horsepower: 3/4 HP, 230/460 volt, 3 phase, 60 Hertz, TEFC, premium efficiency, 1.15 SF.
   12. Maximum drive motor speed: 1,800 rpm.
   13. Drive output speed: Maximum 0.04 rpm (maximum 12 fpm tip speed).
   14. Drive pinion: Single.
   15. Minimum spur gear face width: 2.5 IN.
   16. Flocculating feed well:
      a. Size: 22 FT DIA.
      b. Depth below water surface: to be coordinated with flocculation baffles fabricator - minimum of 6 FT (see Section 11150).
      c. Thickness: Minimum 3/16 IN.
   17. Influent head loss at maximum flow: 3 IN.
   18. Thickness of all submerged stainless steel members: 1/4 IN minimum.
   19. Mechanism rotation: Clockwise.

B. Structural Design:
   1. Maximum ratio of unbraced length to least radius of gyration (slenderness ratio):
      a. Compression members: 120.
      b. Tension members: 240 (for angle about the Z-Z axis).
   2. Maximum unit stress: 1.333 times AISC allowable stresses at all structural members when subject to twice the drive torque.

C. Process Parameters:
   1. The following data to be used to calculate clarifier components (per clarifier):

	AVERAGE DRY WEATHER	PEAK WET WEATHER
Influent flow (w/o RAS), mgd	1.2	6.0
RAS flow, mgd	0.6	4.0
Influent + RAS flow, mgd	1.8	12.0
MLSS, mg/L	1500 - 3500	1500 – 3500

2.4 COMPONENTS

A. Overload Monitoring and Protection System:
   1. Furnish an electrical-mechanical overload sensing system for each clarifier drive mechanism, including:
      1) Factory calibrated torque switches, rated 5 amps at 120 Vac minimum.
      b. Field adjustable over the full torque range of the unit.
      c. Alarm switch set at 100 percent of AGMA rated drive torque capacity in case of an impending overload.

d. Second alarm switch set at 120 percent of AGMA rated drive torque capacity to shut down drive motor.
e. Amperage and current sensing devices shall not be acceptable for the overload sensing system.

2. Mechanism loading indicator:
   a. Separate device, suitable for outdoor mounting.
   b. Mechanism loading indicated on a 0-130 percent graduated scale at all times during operation.
   c. Oriented so that torque may be read from access bridge side.

B. Shear Pin (if used):
1. Shear pin device: Set for 140 percent of AGMA rated torque.
2. Provide straight, non-tapered shear pins with bushings.
3. Shear Pin Monitoring System:
   a. Provide shear pin monitoring system to detect shear pin failure.
   b. Shear pin failure sensor shall be mounted on clarifier drive to sense shear pin failure and shall be weatherproof with required cables to connect to monitoring panel depending on panel location.

2.5 FABRICATION

A. See Section 11005.

B. General:
1. Welds on submerged or partially submerged components shall be continuous.
2. Dull sharp corners of cut or sheared edges by at least two (2) passes of a power grinder.

C. Center Pier:
1. Fabricate center pier of cylindrical stainless steel with a minimum 36 IN DIA by minimum 3/8 IN wall thickness.
2. Provide flanged base for anchor bolting to concrete base of clarifier as shown on Drawings.
   a. Provide water tight connection seal.
   b. Minimum of twelve (8) anchor bolts of at least 1 IN DIA.
3. Provide a flanged top and stiffeners for supporting the sludge collection mechanism, the drive mechanism, drive-mounting plate, access platform, and the access bridge.
4. Provide a drive mechanism mounting plate set plumb with the centerline of the center pier.
5. Provide center pier which serves as an influent pipe and has a minimum of 4 equally-spaced ports at the upper end to direct the flow into the flocculation well at a velocity less than 1 fps.
6. Provide easily accessible and removable plate near the bottom of the center pier for draining center pier.
   a. Opening shall be large enough to insert a submersible pump to dewater the clarifier influent pipe.
   b. Removable plate shall provide a clear square opening not less than 18 IN by 18 IN.
   c. The opening shall be reinforced as needed to handle the imposed loads on the center pier.

D. Flocculating Feedwell:
1. Fabricate from 3/16 IN minimum stainless steel plates.
2. The feedwell shall be located outside the influent pipe to diffuse the liquid into the tank without disturbance or formation of velocity currents.
3. Support the feedwell from drive cage above water level.
   a. Locate feedwell structural members on the outside of the feedwell to provide smooth interior.
4. Feedwell shall project 6 IN above water surface minimum.
5. Flocculation baffles will be supported from the flocculation well (see section 11150)

6. Provide baffled openings in well at liquid level to allow release of scum in a tangential direction.
    a. Minimum 6 openings.

E. Center Drive Cage:
1. All-welded stainless steel box truss construction: 4 FT by 4 FT minimum.
2. Drive cage shall transmit and/or carry all torques (including stall torque) without over stressing members.
    a. Do not transmit any torque to the access bridge.
3. Design drive cage to encompass center column.
    a. Design cage to withstand 200 percent of design torque.
4. Design adjustable connection between drive unit and drive cage to provide for proper alignment and allowance for structural tolerance.
5. Design to support and rotate suction header under maximum load with 1.5 safety factor.

F. Suction Header:
1. Provide rectangular-shaped, full tapered (two (2) directions) section varying in size from a maximum near the tank center to a minimum at the outer end to maintain a minimum velocity of 0.5 feet per second.
2. Provide one (1) header per clarifier, extending from the center manifold to the tank periphery.
3. Provide a flanged end for bolting to the center outlet manifold.
4. Orient header to direct the sludge into the influence of the orifices.
5. Attach a neoprene squeegee with a stainless steel backing plate to the underside of the header.
    a. Provide slotted holes for a minimum 1 IN vertical adjustment of the squeegee.
6. Near the center manifold, provide the header with a 1/4 IN steel plate with neoprene blade to direct sludge from center area to the first orifice or provide first orifice minimum of 6 IN from center manifold.
7. Provide inlet orifices at regular intervals along header.
    a. Do not exceed 30 IN spacing along the header.
    b. Vary the orifice sizes from minimum of 2.75 IN to assure hydraulic balance in the tank and uniform sludge withdrawal from the entire tank bottom at all flows specified.
    c. Maximum headloss through header shall be 1.5 FT.
8. Sludge withdrawal by means of individual riser pipes is not acceptable.
9. Fabricate from 3/16 IN minimum stainless steel plates.

G. Suction Header Support Arms:
1. Provide connections between the truss and header of 1/4 IN 316 stainless steel plate.
2. Fabricate truss arm capable of supporting the header and a surface scum skimming blade.

H. Suction Header Manifold:
1. Provide center manifold constructed of 1/4 IN minimum thickness stainless steel and fitted with two (2) sealing rings.
2. Provide manifold bottom plate securely anchored to the concrete floor and grouted in place after proper alignment.
3. Provide manifold seals:
    a. Secure in place using a minimum of two (2) stainless steel bands.
    b. Each stainless steel band shall have a minimum of two (2) screw clamps to allow for proper tightening of bands.

I. Scum Removal System:
1. Scum skimmers assembly:
    a. Include skimmers, wiper assembly, beaching assembly, and scum trough and discharge piping.
    b. Provide one (1) rotating scum skimmer arm per basin.
    c. Mount skimmers tangentially to influent well and support entire weight on sludge collector truss.

d. Do not support the skimmer on the scum baffle.
e. Design skimmer to collect and move scum the full distance between the flocculating center well and scum baffle.
f. Provide wiper assembly with neoprene wiping edge attached to hinged steel blade, designed to sweep scum up beaching plate and into scum trough.
g. Ramp crest of scum trough to be at same elevation as top of scum baffles.
h. Support wiper assembly at its outer end while traveling across scum trough.

2. Scum box:
   a. Size: 3 FT long by 6 FT wide.
   b. Support from tank wall.
   c. Connect to scum withdrawal pipe.
   d. Assembly shall include:
      1) Scum trough.
      2) Vertical stainless steel sides.
      3) Sloping ramp.
      4) Supports and bracing.
   e. Provide flexible connector for connection to scum withdrawal pipe.
   f. Scum withdrawal piping as shown on Drawings.

J. Drive Mechanism:
1. Fabricate drive components in accordance with AGMA 6010-E and AGMA 6034-B and AGMA 2001-D, or AGMA 2001-C95 for 24 HR continuous duty and 20-year design life based on rated AGMA torque. Design bearing for an ABMA 9 life of 200,000 HRS.
2. Enclose all gearing in a cast iron ASTM A48, Class 30A or Class 40A housing.
3. Exposed gearing is not acceptable.
4. The design must allow for servicing without removing the bridge.
5. Wormgear drive:
   a. Provide drive mechanism consisting of a primary gear reduction unit, an intermediate reduction unit, plus a final reduction unit consisting of a pinion and internal gear enclosed in a turntable base.
   b. Enclose all gearing in a cast iron housing.
   c. Provide all bearings of anti-friction type and running in oil.
   d. Provide totally enclosed ball bearing motor of ample power for starting and continuously operating the mechanism without overloading.
      1) The motor shall conform to NEMA standards and be 230/460 V, 3 PH, 60 Hz.
      2) Motor shall be a minimum of 3/4 HP.
      3) Motor shall comply with NEMA MG 1, Design B and shall be totally enclosed with Class B insulation designed for continuous duty outdoor service.
   e. Primary reduction unit:
      1) Provide a primary reduction unit which drives the intermediate reduction unit through a chain and sprocket arrangement.
      2) Furnish drive chain of #80L self-lubricated roller chain.
      3) Provide an adjustable base mounted on the intermediate reduction unit for chain tension adjustments.
      4) Direct coupled cycloidal reducers are also acceptable.
   f. Intermediate reduction unit:
      1) Provide an intermediate reduction unit consisting of a cast iron housed worm gear speed reducer, with grease and oil lubricated, anti-friction type bearings and service factor of 1.25.
      2) Mount the unit on a machined face on the top of the final reduction unit and properly aligned to maintain accurate centers for the final reduction gearing.
      3) Worm assembly worm and shaft of a heat treated alloy and integral construction and the worm gear of cast manganese bronze, aluminum bronze or ductile iron.
      4) Direct coupled cycloidal reducers are also acceptable.

g. Final reduction unit:
    1) Provide internal gear drive by a heat-treated pinion from the slow speed shaft of the primary gear reducer. Construct the main pinion of heat treated AISI series alloy steel, machined after heat treatment. Support pinion at both top and bottom by a taper roller bearing assembly. Use one-piece pinion shaft construction without an intermediate coupling.
    2) Provide ductile iron internal gear and pinion of AGMA quality 6 minimum.
    3) Provide internal gear design to support center cage and collector.
h. Turntable base:
    1) Provide turntable base with annular raceway to contain balls on which the internal gear rotates.
    2) Furnish ball race without guide shoes and steady bearings.
    3) Furnish ball bearings of alloy steel bearing vertically and horizontally on four removable liner strips pressed into annular raceways in turntable base and internal gear.
        a) Liner strips shall be minimum 3/8 IN thickness.
    4) Protect internal gear, pinion and ball race by a seal and dust shield.
    5) Internal gear, pinion and ball race is to run in oil bath.
    6) Furnish turntable base bolted to the center column and designed to support the internal gear with rotating mechanism and access platform.
    7) Provide a pipe attached to bottom of turntable base for condensate removal.
    8) Furnish oil piping which terminates within the center of the base. Provide oil level sight glass and drain.
    9) Fully contoured precision gear/bearing sets are also acceptable.

K. Access Platforms:
1. Minimum 8 FT by 8 FT.
    a. 3 FT minimum clearance around drive unit assembly for maintenance and service, and access from walkway.
2. Fabricate for uniform live load of 100 LBS per SQ FT.
3. Construct of 1-1/2 IN deep serrated aluminum grating attached to minimum 1/4 IN structural stainless steel frame, with any necessary stiffeners and supports.
4. Include lift-out sections where required for routine maintenance of equipment.
5. Provide walkway, access platform and handrail in full compliance of federal, state, and local safety standards.

L. Walkways:
1. Provide stainless steel beam-type or pont truss type access bridge setting on operating platform to support walkway and tipping scum trough.
    a. Provide 3 FT wide walkways covered of 1-1/2 IN deep serrated aluminum grating.
2. Provide at locations and orientation shown on Drawings.
3. Walkway and platform fabrication:
    a. Fabricate walkway and platform with uniform live load of 150 LBS per lineal foot with a maximum deflection of 1/360 of the span.
    b. Walkway and platform shall be braced against lateral movement using wind load of 30 LBS/SQ FT.
4. Provide handrail and toe plate on each side of walkway and around access platform.
    a. Fabricate handrail of triple rail, 1-1/2 IN DIA Schedule 40 aluminum, 42 IN height.
    b. Fabricate toe plate of 3/16 IN thick by 4 IN high aluminum.
    c. Extend walkway to the center of the clarifier.
5. Support stainless steel beams on steel or ultra high molecular weight (UHMW) slide plates at the tank wall.
6. Operating platform:
    a. Provide platform for access to and around the drive mechanism.
    b. Provide minimum clear space at least 3 FT wide around the drive unit.
    c. Fabricate platform of 3/8 IN aluminum checkered plate.

M. Anchorage:
   1. Provide ASTM A276 316 stainless steel anchor bolts complete with nuts and washers for equipment installation.
   2. Bolts shall be 1 IN DIA minimum.

N. Fasteners:
   1. All fasteners shall be Type 316 stainless steel.
   2. Bolts shall be 1/2 IN DIA minimum.

O. Sludge Collection Manifold:
   1. Constructed to rotate around the inlet column, and attached to truss.
   2. Neoprene seals with 316 stainless steel clamps.
   3. Size per manufacturer.

P. Shop or Factory Finishing:
   1. Surface preparation and shop painting is required for all non-316 stainless ferrous metals, equipment and accessories per the following:
      a. Prime coat:
         1) P1 = 1 coat, 3.5 mils, Series 90-97 Tneme-Zinc or equal (Zinc-Rich Urethane).
      b. Finish coat(s):
         1) F1 = 1 coat, 6 mils, Series L69 Epoxoline or equal (Polyamidoamine Epoxy).
         2) F2 = 1 coat, 2.5 mils, Series 1080 Endura-Shield W.B. or equal (Waterborne Acrylic Polyurethane).
   2. Apply a heavy application of a rust-resistant coating to gears, bearing surfaces, and other unpainted surfaces.
      a. Maintain coating during storage and until the equipment is placed into operation.
   3. All aluminum in contact with dissimilar materials shall be coated with Koppers Hi-guard, two (2) coats, 2.0-3.0 dry mils per coat.

2.6 SOURCE QUALITY CONTROL

A. Provide evidence of compliance with PART 1 requirements for the following:
   1. Referenced standards.
   2. Independent design evaluation of drive.

B. Provide evidence of compliance with PART 2 requirements, signed by a Registered Professional Structural Engineer, for the following:
   1. Structural members and connections are designed so that unit stresses do not exceed 130 percent of AISC allowable stresses.
   2. Compression and tension member slenderness ratios do not exceed 120 and 240, respectively.
   3. Statement that all members have been designed to support the loadings as specified.
   4. Center column and bridge support calculations.

2.7 SPARE PARTS

A. For each drive furnished, provide:
   1. One (1) set of all bearings and bearing seal rings for drive unit.
   2. Two (2) sets of all gaskets.
   3. Two (2) sets of spur gear felt seals and replaceable bearing races.
   4. Additional sprockets and chain links for tip speeds of 5, 10 and 15 fpm (if used).
   5. Two sets neoprene lip seals.
   6. Two (2) sets scum box seals for pipe trough connection.
   7. One (1) set of all bearings for skimmer system.

PART 3 - EXECUTION

3.1 INSTALLATION

A. Install clarifier equipment according to manufacturer's recommendations.

1. Manufacturer's service technician shall observe and direct equipment installation.
2. Manufacturer's service technician shall certify that mechanism has been installed in accordance with manufacturer's recommendations.

B. Grout:
1. Utilize clarifier mechanism to install a 2 IN finished grout floor in the tank floor.
   a. Use temporary screeds attached to the collector arms and the mechanism.
   b. Guide with mechanism under power from drive unit.
   c. See Section 03308 for additional grout installation requirements (similar to concrete).

3.2 FIELD QUALITY CONTROL

A. Employ and pay for services of equipment manufacturer's field service representative(s) to:
1. Inspect equipment covered by these Specifications.
2. Supervise adjustments and installation checks.
3. Provide test equipment, tools, and instruments necessary to accomplish equipment testing.
4. Conduct initial startup of equipment, perform operational checks, and supervise acceptance testing.
5. Provide through Contractor a written statement that manufacturer's equipment has been installed properly, started up and is ready for operation by Owner's personnel.
6. Instruct Owner's personnel as specified in Section 01650 at jobsite on operation and maintenance of furnished equipment.
7. Provide the following:
   a. For equipment inspections: 8 HRS minimum, or as needed, for each clarifier.
   b. For equipment startup and testing: 24 HRS minimum for each clarifier.

B. Torque Test:
1. Load test the entire collector mechanism by anchoring collector arms individually, one (1) at a time.
   a. In successive tests, demonstrate the sludge collection mechanism's (including drive unit, cage, gears and structures) capability to withstand not less than 130 percent of the specified rated running torque.
2. Field torque test the clarifier mechanism under the supervision of the equipment manufacturer's representative before the mechanisms are approved and placed into operation.
3. The torque test shall consist of securing the rake arms by cables to anchor bolts installed by the contractor in the tank floor at locations recommended by the manufacturer and the Engineer.
   a. Apply a torque load to the scraper arm by means of a ratchet lever and cylinder connected to the cable assembly.
4. Measure the magnitude of the applied load by calculating the torque from the distance of the line of action of each cable to the center line of the mechanism.
   a. Readings shall be taken at 100 percent and 120 percent of the AGMA rated torque.
   b. The test load shall be applied and noted on the torque overload device.
5. The manufacturer's service representative shall certify that the alarm and motor cut-out torque of the drives as calibrated in the manufacturer's shop are in proper operation to shut down the units as specified.

C. Operation Test:
1. Fill clarifier with water to its operating level and operate mechanism continuously at its maximum speed for a period of not less than 48 HRS.
   a. At no time during the operating tests shall the equipment exceed the rated torque or exhibit indications of binding or uneven operation.
   b. Record torque values as registered on the drive mechanism torque indicator and motor amperage (all three (3) phases) at 3 HRS intervals.
2. After successful completion of the fully submerged operating test, operate the mechanism at full speed with no more than 1.5 FT of water at the sidewall in the tank for a period of not less than 6 HRS.

a. Record data as described above.

3. If the mechanism exceeds rated torque or the mechanism exhibits indications of binding or improper adjustment:
   a. Contractor shall immediately halt the tests and remedy the problem.
   b. Repeat the tests after completion of necessary repairs or adjustments.
   c. Failure to successfully complete the test in three (3) attempts is sufficient cause for rejection.
   d. Failure to complete the testing program as outlined in the preceding paragraphs is sufficient cause for the Owner to require that the equipment be removed from the Project.

D. Mechanism Speed Setting:
   1. After completion of the specified field tests, fit the drive mechanism with a sprocket set which shall provide the rake arms with a tip speed of 15 fpm.

END OF SECTION

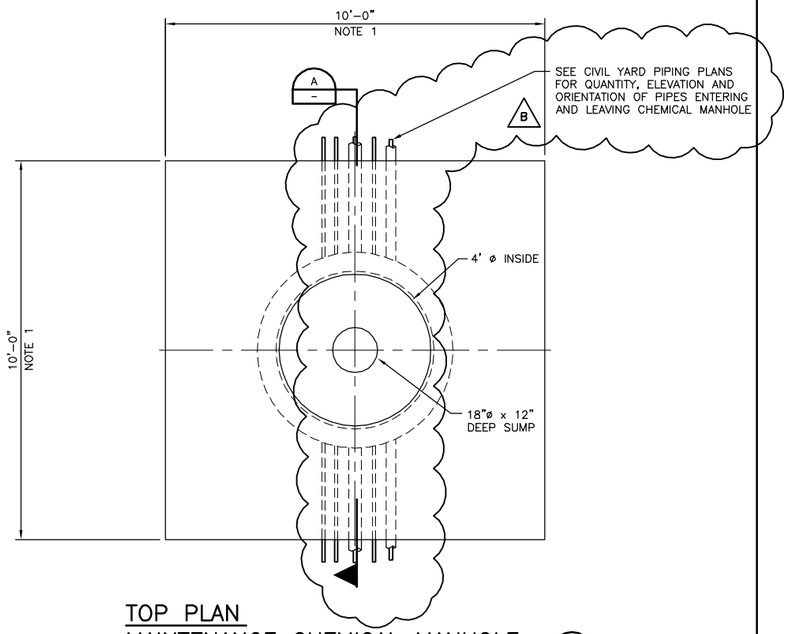

TOP PLAN
MAINTENANCE CHEMICAL MANHOLE
1/2" = 1'-0"
1

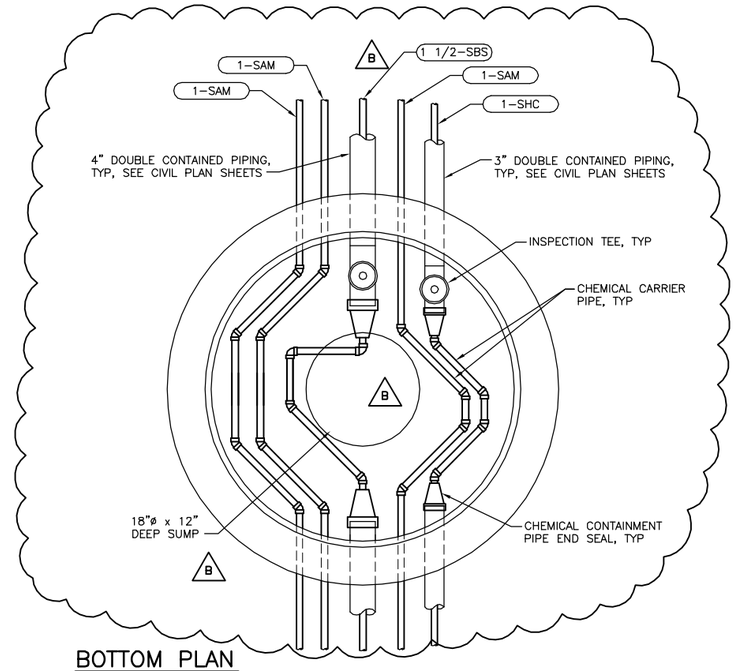

BOTTOM PLAN
CHEMICAL MAINTENANCE MANHOLE DETAIL
NTS
2

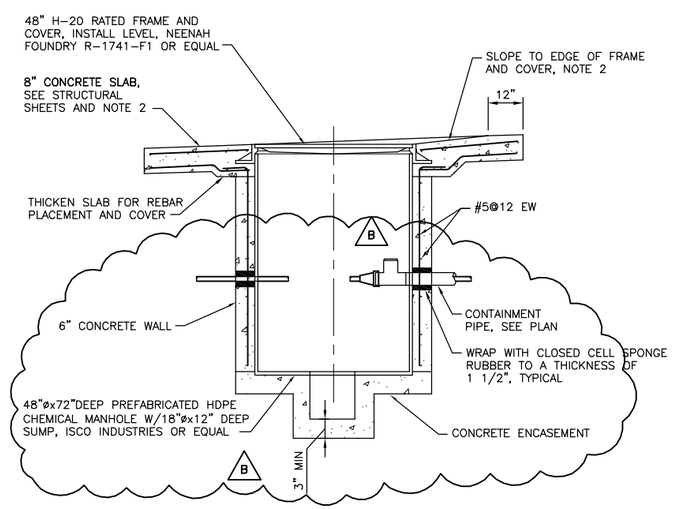

SECTION
1/2" = 1'-0"
A

NOTES:

1. PROVIDE CONCRETE SLAB AS SHOWN IN PAVED AREAS. PROVIDE 1'-6" WIDE CONCRETE SLAB AROUND THE CHEMICAL MANHOLE IN DIRT AREAS.
2. SLOPE TO MATCH SURROUNDING GRADE IN PAVED AREAS. TOP OF CHEMICAL MANHOLE LID SHALL BE 2" ABOVE FINISH GRADE IN DIRT AREAS.
3. MANHOLE 1 AND 2 ARE SIMILAR, EXCEPT FOR NUMBER OF PIPES AND ORIENTATION.

B

HDR
HDR Engineering, Inc.

ISSUE	DATE	DESCRIPTION
B	12-03-15	ADDENDUM #4
A	JUNE 2015	ISSUED FOR BID

PROJECT MANAGER	C. OLSON
DESIGNED	M. PERINPANAYAGAM
DESIGNED	
CHECKED	C. OLSON
DRAWN	P. VAN MEURS
DATE	JUNE 30, 2015
PROJECT NUMBER	215786

REGISTERED PROFESSIONAL ENGINEER
CRAIG A. OLSON
NO. 39819
EXP. 12/31/17
CIVIL
STATE OF CALIFORNIA
12-03-15

CITY OF PINOLE CALIFORNIA 1903

PINOLE/HERCULES
WATER POLLUTION
CONTROL PLANT UPGRADE
CLIENT PN

CIVIL

CIVIL DETAILS 4

0 1" 2"

FILENAME	215786-00C004_RECOVER
SCALE	NTS

SHEET
00C004

FILE: 215786-00C004_recover.dwg
DATE: Dec 03, 2015-3:19:35pm, ranider

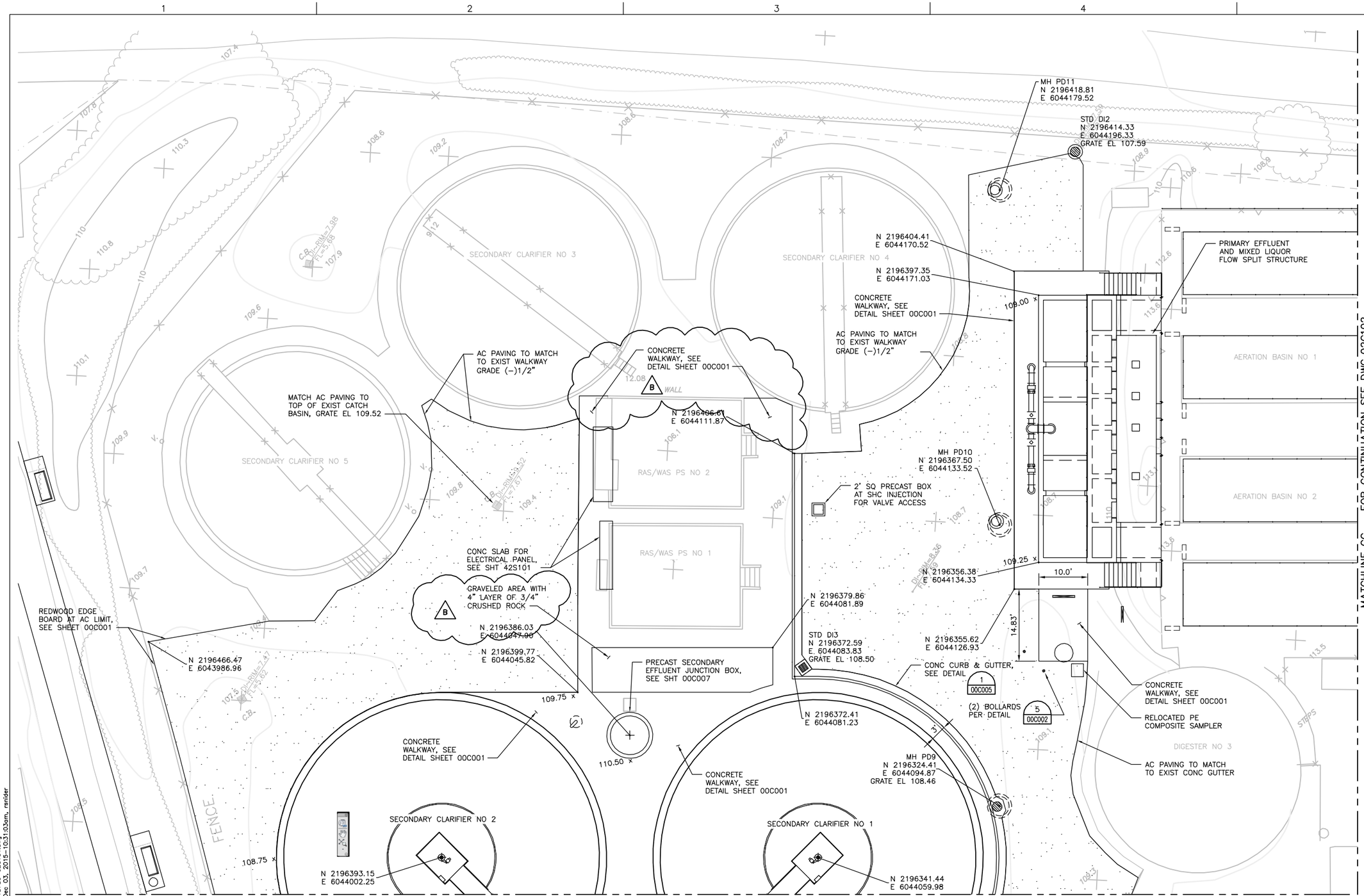

NOTES:

1. SPOT ELEVATIONS OF EXISTING GRADING AND PAVING ARE PROVIDED FOR REFERENCE AND ARE TO BE FOLLOWED FOR NEW GRADING AND PAVING WHERE NO OTHER DESIGN INPUT IS GIVEN.
2. SLOPE GRADE UNIFORMLY TO STORM DRAIN DROP INLETS WHEREVER SHOWN.

AREA 1	AREA 2
AREA 3	AREA 4
AREA 5	AREA 6

FILE: 215786-02C101.dwg
DATE: Dec 03, 2015-10:31:03am, ranider

HDR
HDR Engineering, Inc.

ISSUE	DATE	DESCRIPTION
B	12-03-15	ADDENDUM #4
A	JUNE 2015	ISSUED FOR BID

PROJECT MANAGER	C. OLSON
DESIGNED	M. PERINPANAYAGAM
DESIGNED	
CHECKED	C. OLSON
DRAWN	P. VAN MEURS
DATE	JUNE 30, 2015
PROJECT NUMBER	215786

REGISTERED PROFESSIONAL ENGINEER CRAIG A. OLSON NO. 39819 EXP. 12/31/17 CIVIL STATE OF CALIFORNIA 12-03-15

CITY OF PINOLE CALIFORNIA 1903

PINOLE/HERCULES
WATER POLLUTION
CONTROL PLANT UPGRADE
CLIENT PN

CIVIL

GRADING AND PAVING PLAN
AREA 1

FILENAME	215786-02C101
SCALE	1" = 10'

SHEET **02C101**

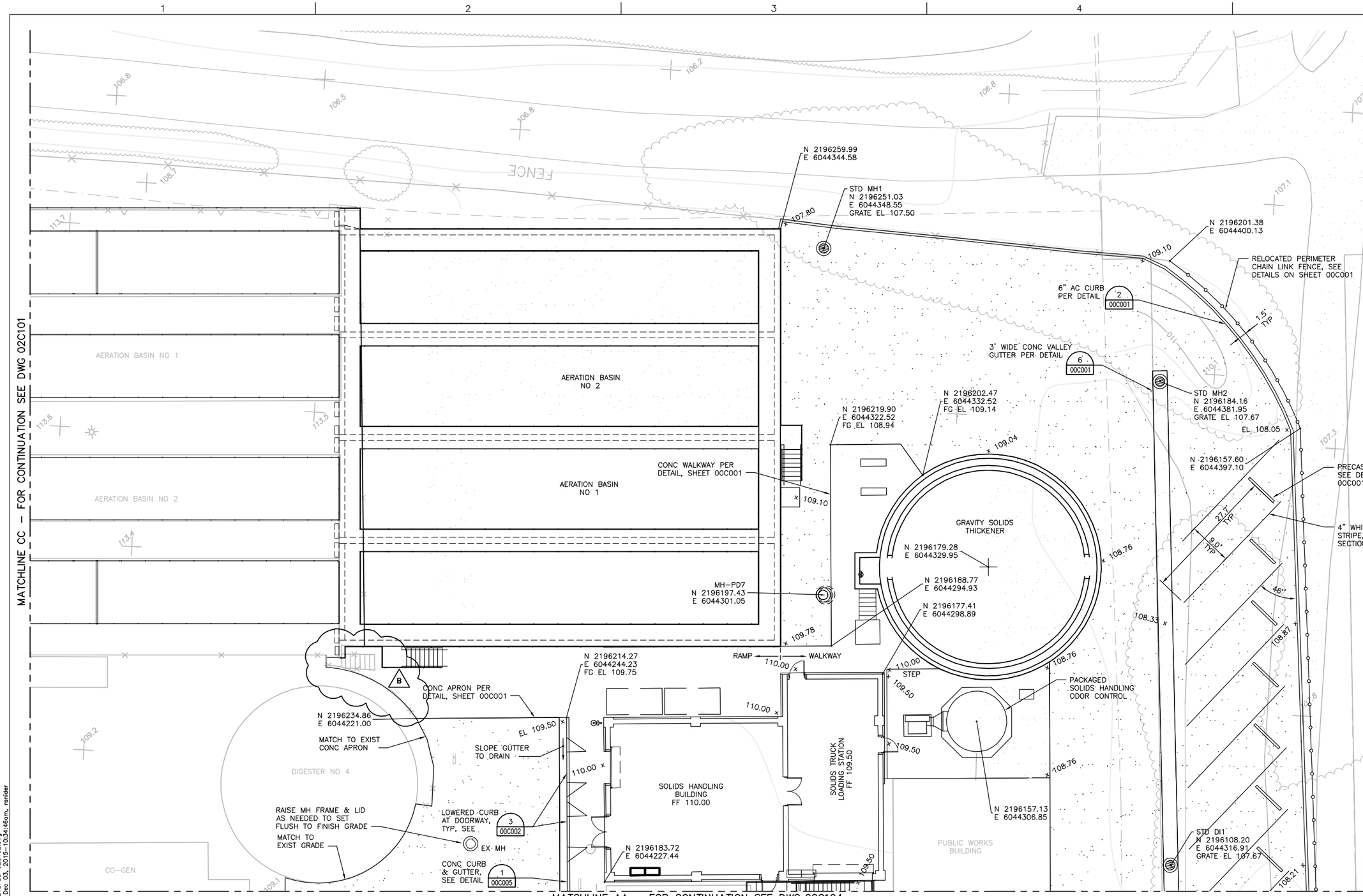

NOTES:

1. SPOT ELEVATIONS OF EXISTING GRADING AND PAVING ARE PROVIDED FOR REFERENCE AND ARE TO BE FOLLOWED FOR NEW GRADING AND PAVING WHERE NO OTHER DESIGN INPUT IS GIVEN.
2. SLOPE GRADE UNIFORMLY TO STORM DRAIN DROP INLETS WHEREVER SHOWN.

AREA 1	AREA 2
AREA 3	AREA 4
AREA 5	AREA 6

FILE: 215786–02C102.dwg
DATE: Dec 03, 2015–10:34:46am, renider

HDR
HDR Engineering, Inc.

ISSUE	DATE	DESCRIPTION
B	12–03–15	ADDENDUM #4
A	JUNE 2015	ISSUED FOR BID

PROJECT MANAGER	C. OLSON
DESIGNED	M. PERINPANAYAGAM
DESIGNED	
CHECKED	C. OLSON
DRAWN	P. VAN MEURS
DATE	JUNE 30, 2015
PROJECT NUMBER	215786

REGISTERED PROFESSIONAL ENGINEER
CRAIG A. OLSON
NO. 39819
EXP. 12/31/17
CIVIL
STATE OF CALIFORNIA
12-03-15

CITY OF PINOLE CALIFORNIA 1903

PINOLE/HERCULES
WATER POLLUTION
CONTROL PLANT UPGRADE
CLIENT PN

CIVIL

GRADING AND PAVING PLAN
AREA 2

0 1" 2"

FILENAME	215786–02C102
SCALE	1" = 10'

SHEET
02C102

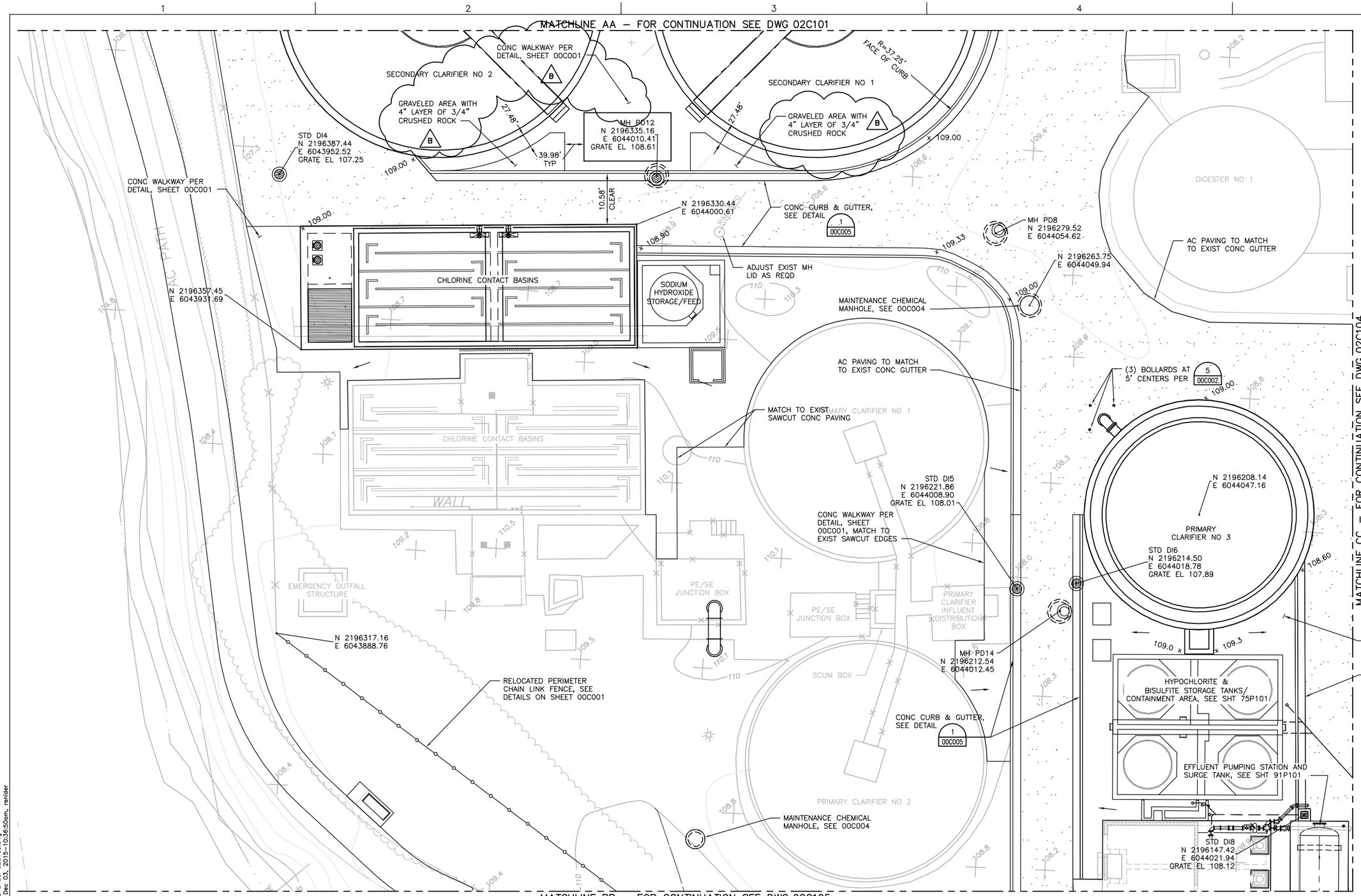

NOTES:

1. SPOT ELEVATIONS OF EXISTING GRADING AND PAVING ARE PROVIDED FOR REFERENCE AND ARE TO BE FOLLOWED FOR NEW GRADING AND PAVING WHERE NO OTHER DESIGN INPUT IS GIVEN.
2. SLOPE GRADE UNIFORMLY TO STORM DRAIN DROP INLETS WHEREVER SHOWN.

AREA 1	AREA 2
AREA 3	AREA 4
AREA 5	AREA 6

FILE: 215786-02C103.dwg
DATE: Dec 03, 2015-10:36:50am, ranider

HDR
HDR Engineering, Inc.

ISSUE	DATE	DESCRIPTION
B	12-03-15	ADDENDUM #4
A	JUNE 2015	ISSUED FOR BID

PROJECT MANAGER	C. OLSON
DESIGNED	M. PERINPANAYAGAM
DESIGNED	
CHECKED	C. OLSON
DRAWN	P. VAN MEURS
DATE	JUNE 30, 2015
PROJECT NUMBER	215786

REGISTERED PROFESSIONAL ENGINEER CRAIG A. OLSON NO. 39819 EXP. 12/31/17 CIVIL STATE OF CALIFORNIA 12-03-15

CITY OF PINOLE CALIFORNIA 1903

PINOLE/HERCULES WATER POLLUTION CONTROL PLANT UPGRADE CLIENT PN

CIVIL

GRADING AND PAVING PLAN AREA 3

0 1" 2"

FILENAME	215786-02C103
SCALE	1" = 10'

SHEET **02C103**

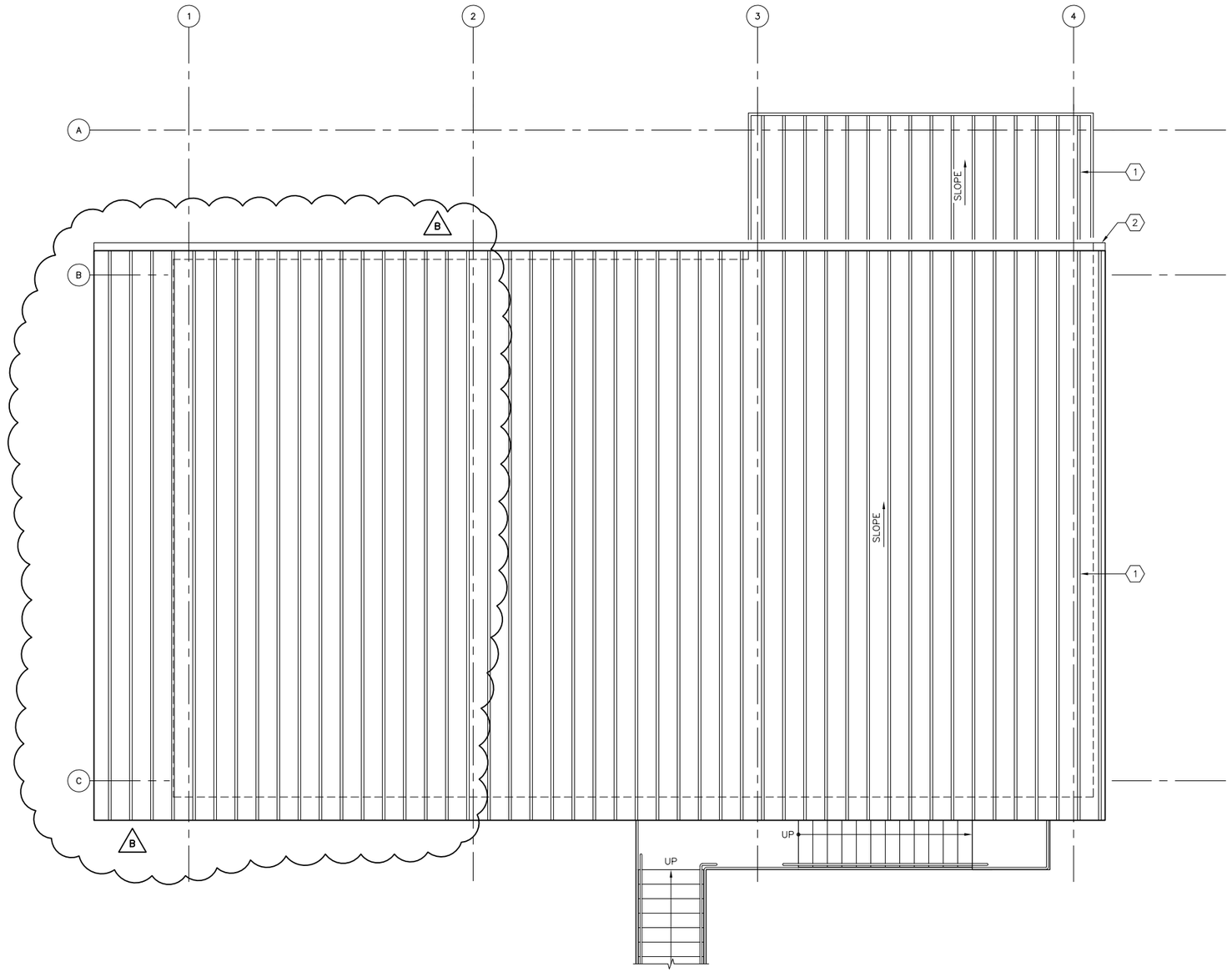

ROOF PLAN

1/4" = 1'-0"

KEY NOTES:

1. METAL STANDING SEAM CANOPY COVER.
2. GUTTER.

ISSUE	DATE	DESCRIPTION
B	12-03-15	ADDENDUM #4
A	JUNE 2015	ISSUED FOR BID

PROJECT MANAGER	C. OLSON
DESIGNED	C. OLSON
DESIGNED	M. EVERETT
CHECKED	
DRAWN	M. MENDOZA
DATE	JUNE 30, 2015
PROJECT NUMBER	215786

REGISTERED PROFESSIONAL ENGINEER CRAIG A. OLSON NO. 39819 EXP. 12/31/17 CIVIL STATE OF CALIFORNIA 12-03-15

PINOLE/HERCULES
WATER POLLUTION
CONTROL PLANT UPGRADE
CLIENT PN

ARCHITECTURAL

SOLIDS HANDLING BUILDING
ROOF PLAN

FILENAME	215786-61A103
SCALE	1/4" = 1'-0"

SHEET **61A103**

FILE: 215786-61A103.dwg
DATE: Dec 03, 2015-3:46:14pm, rsnider

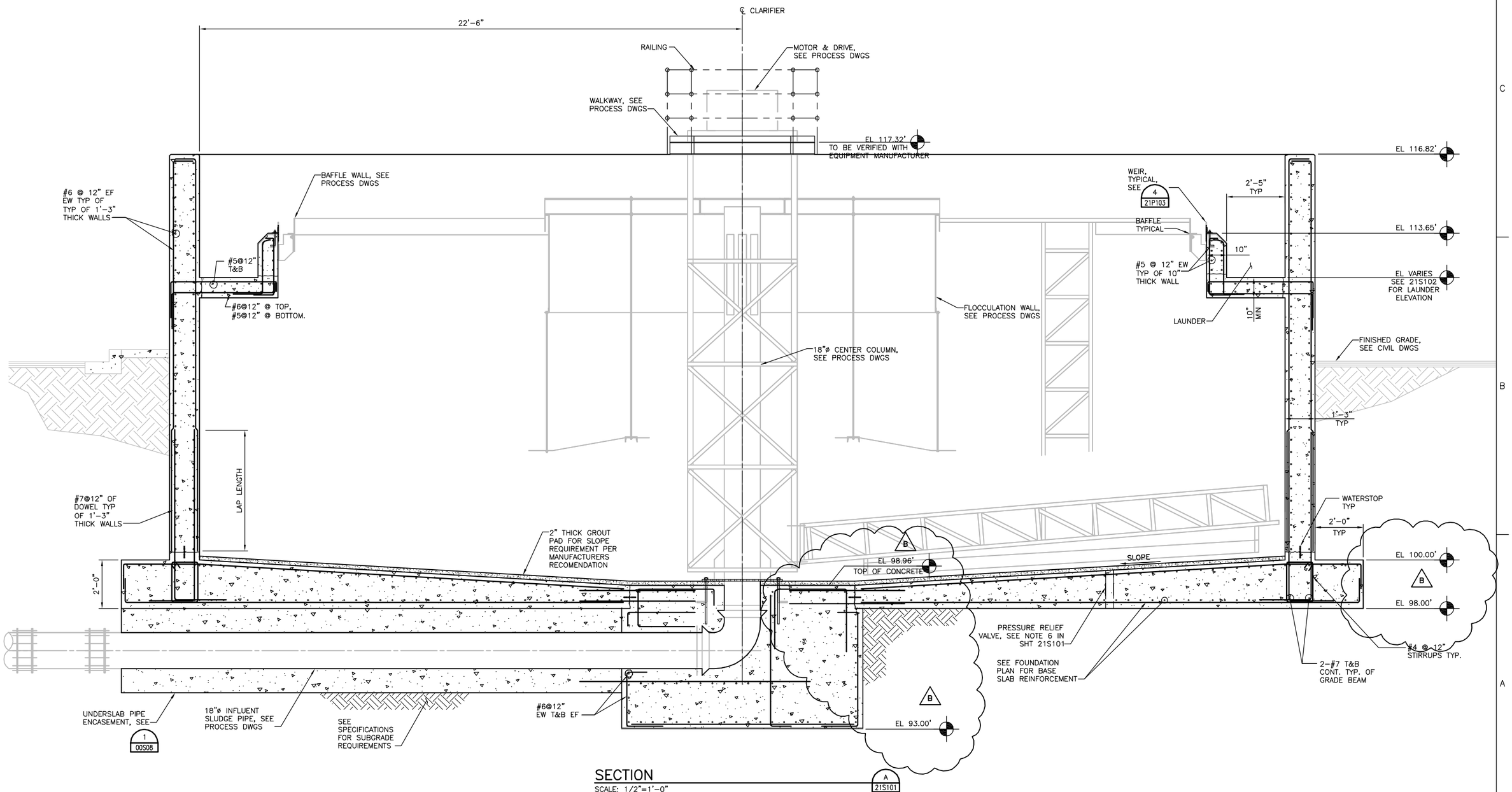

SECTION

SCALE: 1/2"=1'-0"

A 21S101

FILE: 215786-21S103.dwg
DATE: Dec 03, 2015-10:50:16am, rsnider

HDR

HDR Engineering, Inc.

ISSUE	DATE	DESCRIPTION
B	12-03-15	ADDENDUM #4
A	JUNE-2015	ISSUED FOR BID

PROJECT MANAGER	C. OLSON
DESIGNED	Z. LI
DESIGNED	
CHECKED	O. TAVANGAR
DRAWN	D.ELDREDGE
DATE	JUNE 30, 2015
PROJECT NUMBER	215786

REGISTERED PROFESSIONAL ENGINEER
ZHEN LI
NO. 74809
EXP. 12/31/17
CIVIL
STATE OF CALIFORNIA

CITY OF PINOLE CALIFORNIA 1903

PINOLE/HERCULES
WATER POLLUTION
CONTROL PLANT UPGRADE
CLIENT PN

STRUCTURAL

PRIMARY CLARIFIER NO 3
SECTION

0 1" 2"

FILENAME	215786-21S103
SCALE	AS NOTED

SHEET
21S103

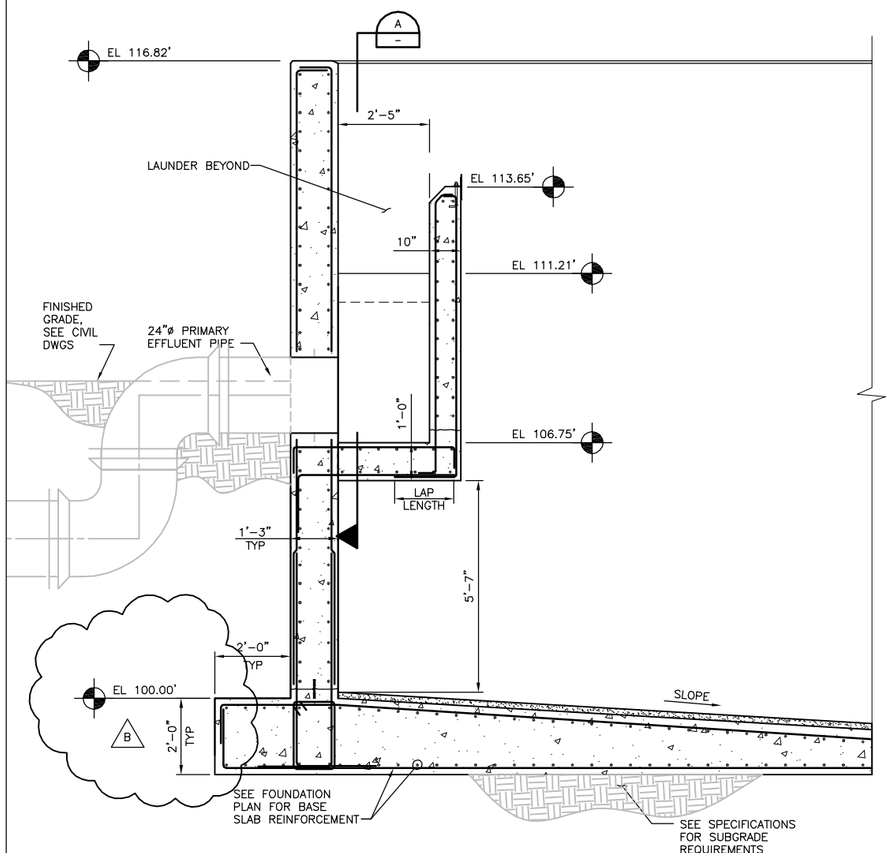

DETAIL
SCALE: 1/2"=1'-0"
1 / 21S101

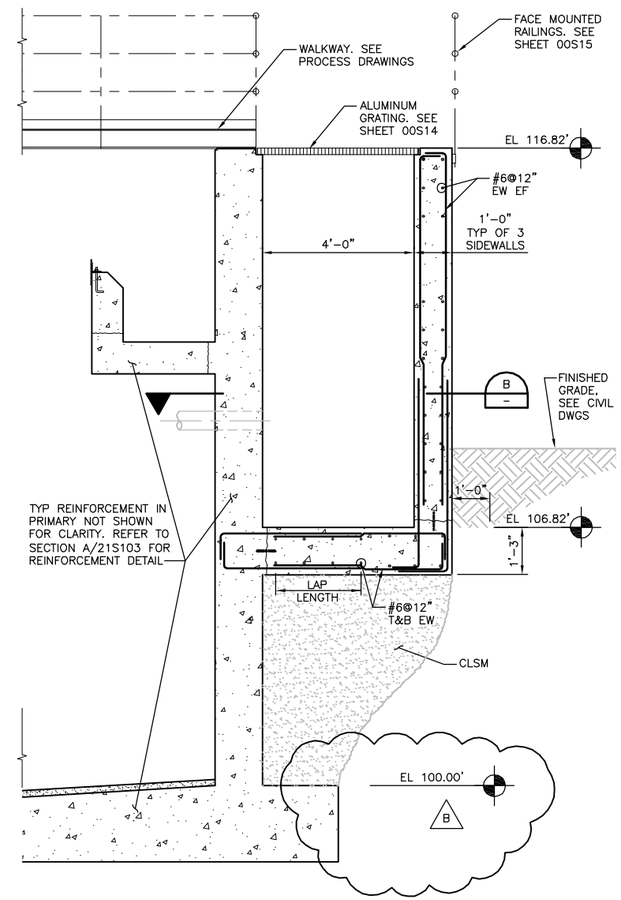

SECTION
SCALE: 1/2"=1'-0"
2 / 21S102

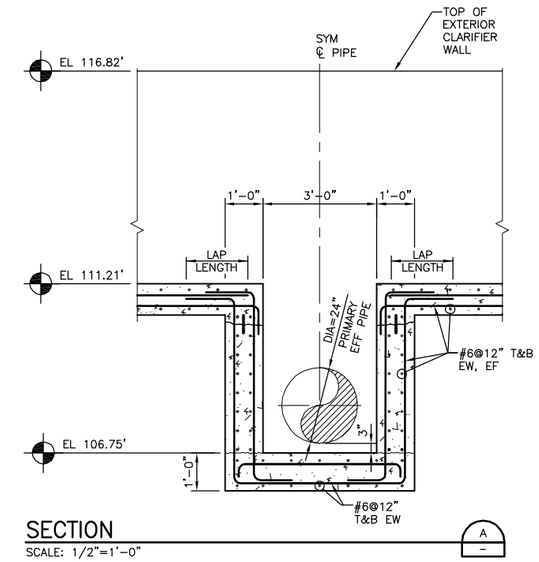

SECTION
SCALE: 1/2"=1'-0"

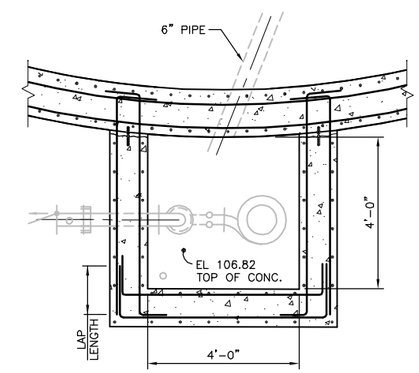

SECTION
SCALE: 1/2"=1'-0"
B / –

FILE: 215786-21S105.dwg
DATE: Dec. 03, 2015-10:51:38am, rander

HDR
HDR Engineering, Inc.

ISSUE	DATE	DESCRIPTION
B	12-03-15	ADDENDUM #4
A	JUNE-2015	ISSUED FOR BID

PROJECT MANAGER	C. OLSON
DESIGNED	Z. LI
DESIGNED	
CHECKED	O. TAVANGAR
DRAWN	D.ELDREDGE
DATE	JUNE 30, 2015
PROJECT NUMBER	215786

REGISTERED PROFESSIONAL ENGINEER
ZHEN LI
NO. 74809
EXP. 12/31/17
CIVIL
STATE OF CALIFORNIA

CITY OF PINOLE CALIFORNIA 1903

PINOLE/HERCULES
WATER POLLUTION
CONTROL PLANT UPGRADE
CLIENT PN

STRUCTURAL

PRIMARY CLARIFIER NO 3
DETAILS

0 1" 2"

FILENAME	215786-21S105
SCALE	AS NOTED

SHEET
21S105

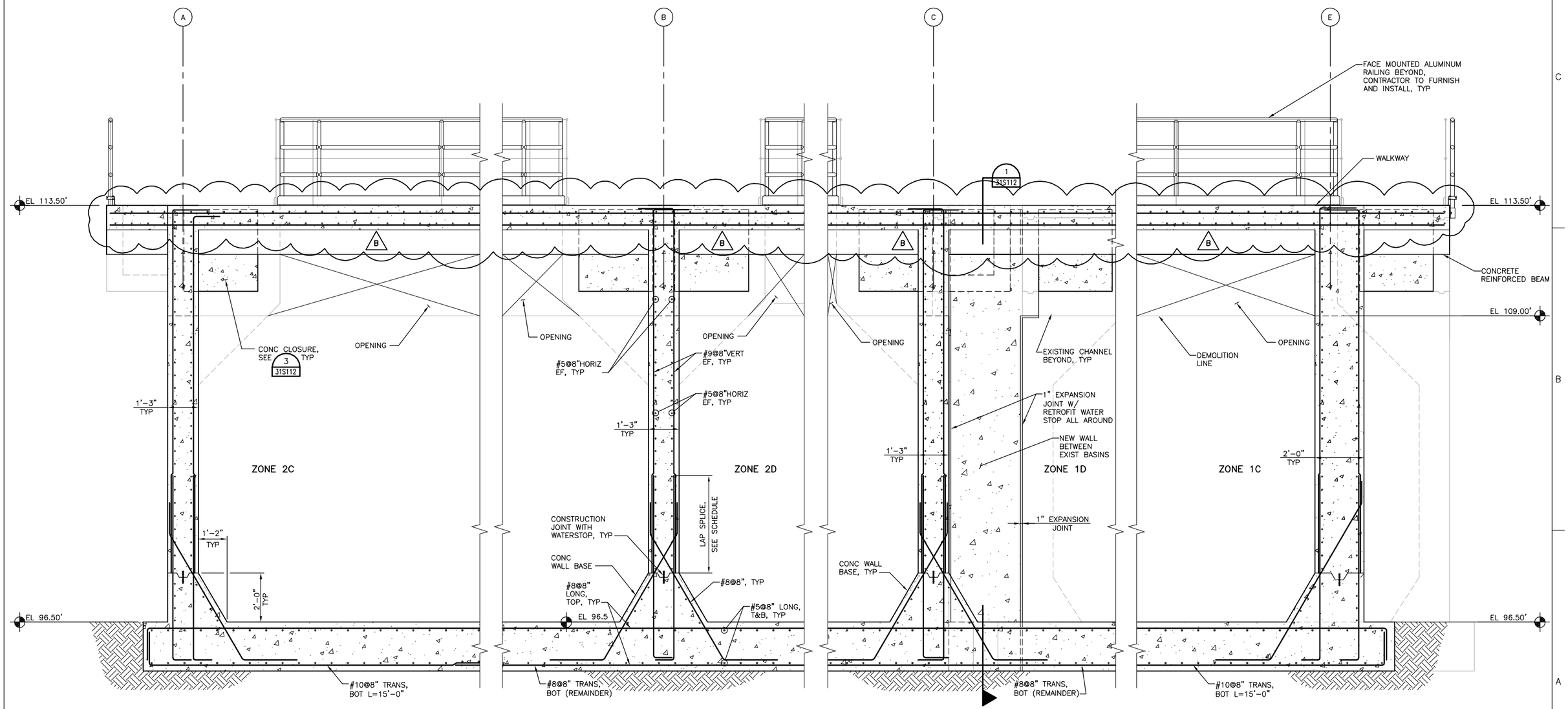

NOTE:
FOR INFO NOT SHOWN, SEE N/31S109 SIM

NOTE:
FOR WALL REINF BEYOND NEW TO EXIST TRANSITION SEE SHEET 31S108, TYP

NOTE:
FOR INFO NOT SHOWN, SEE N/31S109

NOTE:
FOR INFO NOT SHOWN, SEE N/31S109 SIM

SECTION M 31S105
1/2" = 1'-0"

SECTION N 31S105
1/2" = 1'-0"

SECTION P 31S105
1/2" = 1'-0"

SECTION Q 31S105
1/2" = 1'-0"

FILE: 215786-31S109.dwg
DATE: Dec 03, 2015-3:50:42pm, rsnider

HDR
HDR Engineering, Inc.

ISSUE	DATE	DESCRIPTION
B	12-03-15	ADDENDUM #4
A	JUNE-2015	ISSUED FOR BID

PROJECT MANAGER	C. OLSON
DESIGNED	M MOSTAFA
DESIGNED	
CHECKED	O. TAVANGAR
DRAWN	D. ELDREDGE
DATE	JUNE 30, 2015
PROJECT NUMBER	215786

REGISTERED PROFESSIONAL ENGINEER MOHAMMADREZA MOSTAFA NO. 78649 EXP. 09/30/17 CIVIL STATE OF CALIFORNIA

CITY OF PINOLE CALIFORNIA 1903

PINOLE/HERCULES WATER POLLUTION CONTROL PLANT UPGRADE CLIENT PN

STRUCTURAL

AERATION BASINS EXPANSION SECTIONS AND DETAILS

0 1" 2"

FILENAME	215786-31S109
SCALE	AS NOTED

SHEET
31S109

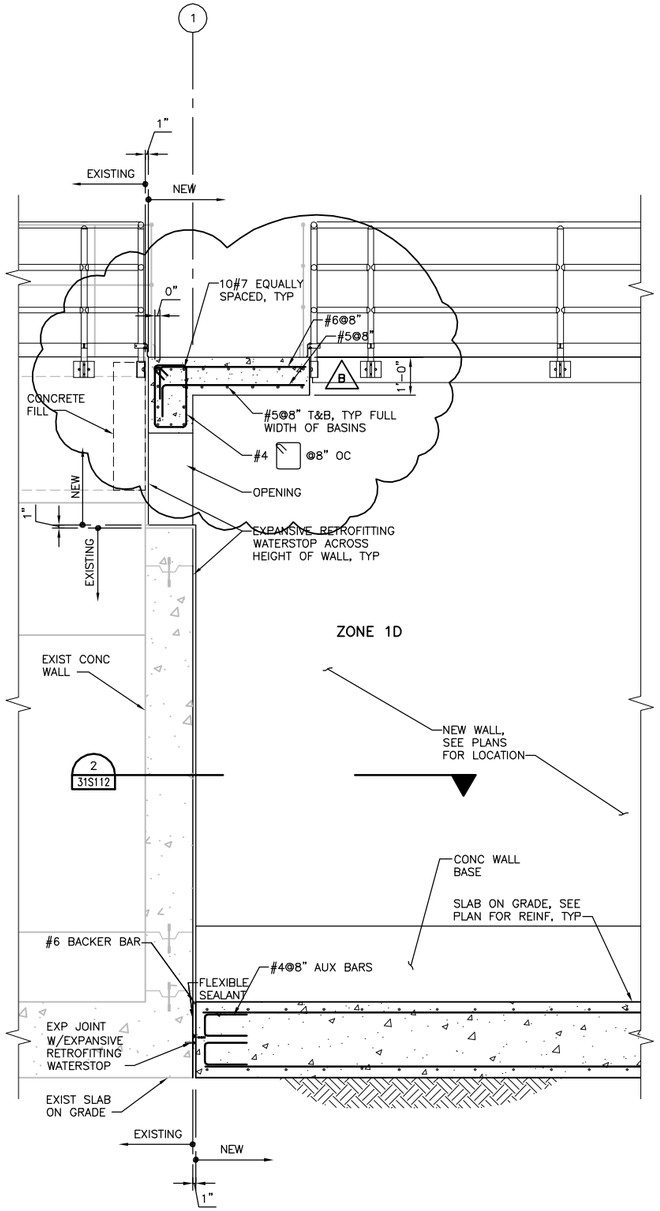

SECTION R 31S104
1/2" = 1'-0"

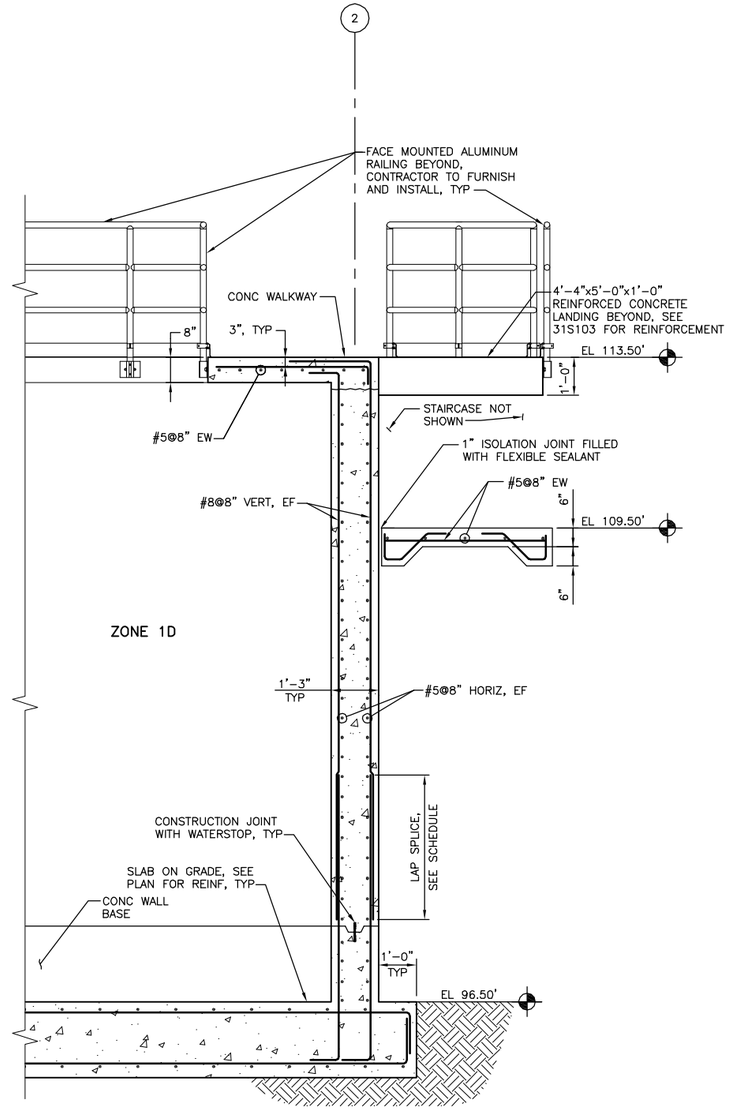

SECTION S 31S104
1/2" = 1'-0"

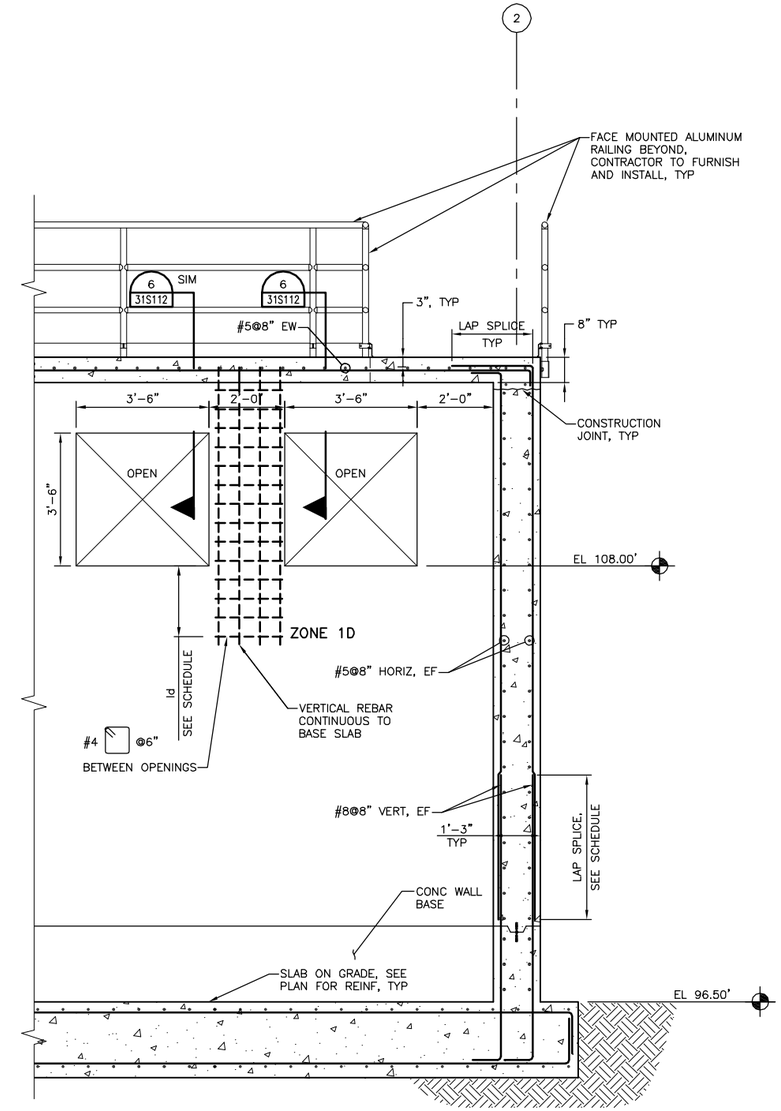

SECTION T 31S104
1/2" = 1'-0"

FILE: 215786-31S110.dwg
DATE: Dec 03, 2015-11:44:07am, ranider

HDR
HDR Engineering, Inc.

ISSUE	DATE	DESCRIPTION
B	12-03-15	ADDENDUM #4
A	JUNE-2015	ISSUED FOR BID

PROJECT MANAGER	C. OLSON
DESIGNED	M MOSTAFA
DESIGNED	
CHECKED	O. TAVANGAR
DRAWN	D. ELDREDGE
DATE	JUNE 30, 2015
PROJECT NUMBER	215786

REGISTERED PROFESSIONAL ENGINEER MOHAMMADREZA MOSTAFA NO. 78649 EXP. 09/30/17 CIVIL STATE OF CALIFORNIA

CITY OF PINOLE CALIFORNIA 1903

PINOLE/HERCULES
WATER POLLUTION
CONTROL PLANT UPGRADE
CLIENT PN

STRUCTURAL

AERATION BASINS EXPANSION SECTIONS AND DETAILS

0 1" 2"

FILENAME	215786-31S110
SCALE	AS NOTED

SHEET **31S110**

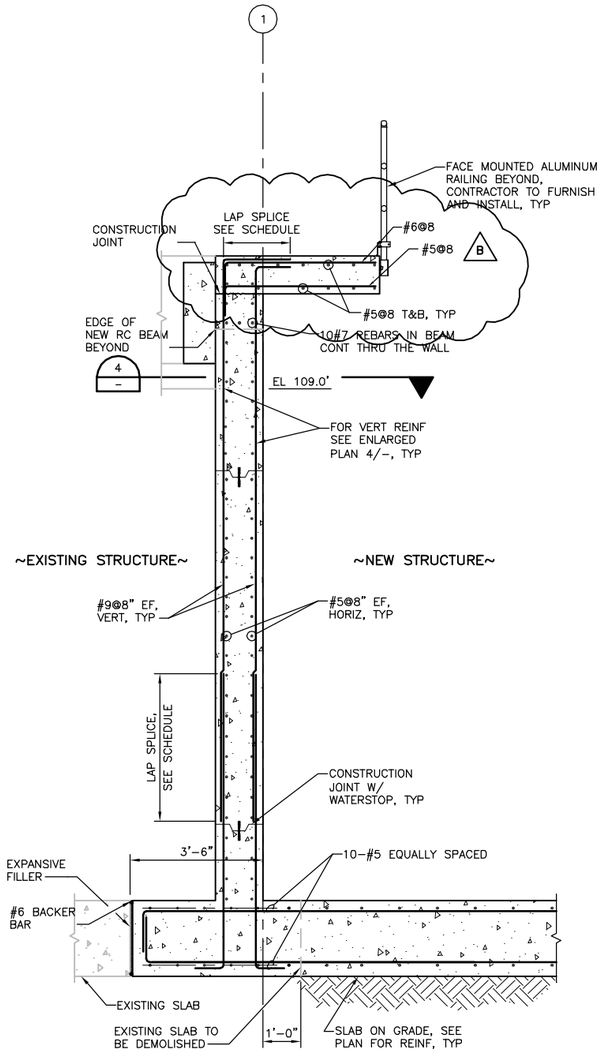

WALL SECTION AT CHANNEL INFILL

SCALE: 1/2"=1'-0"

1 VAR

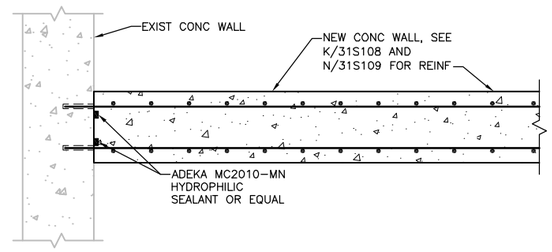

DETAIL – PLAN VIEW

SCALE: 3/4"=1'-0"

2 31S110

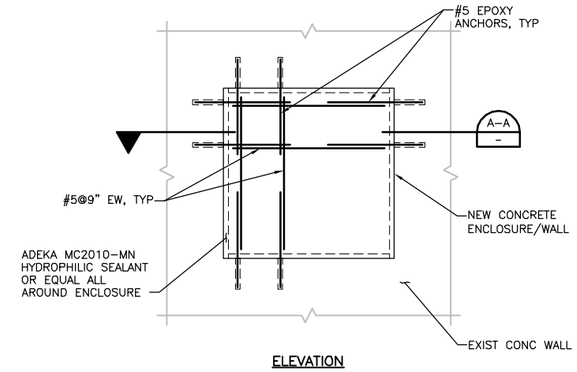

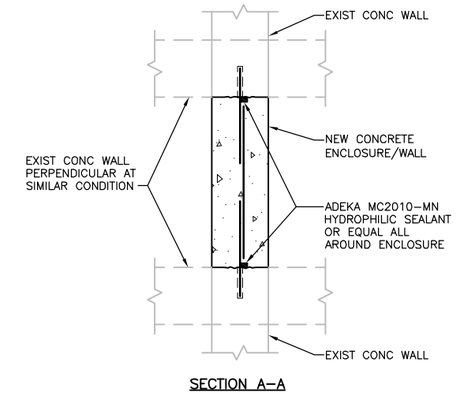

CLOSURE DETAIL

SCALE: 3/4"=1'-0"

3 VAR

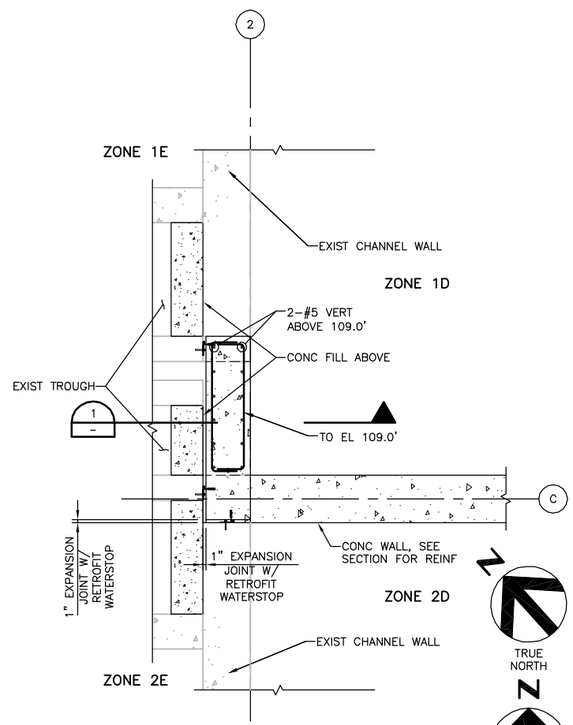

ENLARGED PLAN AT CHANNEL INFILL

SCALE: 1/2"=1'-0"

4 –

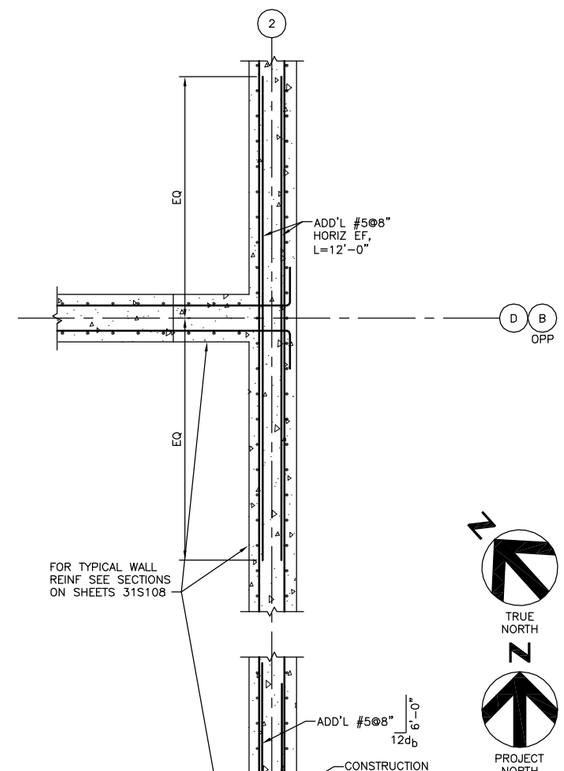

ENLARGED PLAN AT CHANNEL INFILL

SCALE: 1/2"=1'-0"

5 31S102

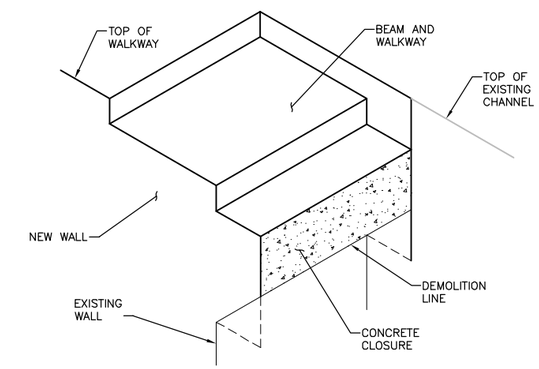

ISOMETRIC VIEW (FROM GROUND ELEVATION)

SCALE: N.T.S.

7 31S103

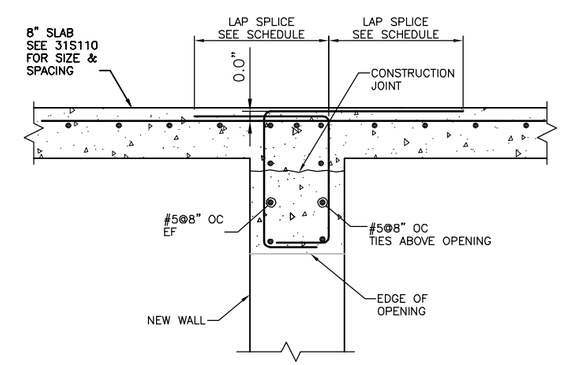

DETAIL ABOVE OPENING

SCALE: 1"=1'-0"

6 31S110

FILE: 215786-31S112.dwg
DATE: Dec 03, 2015-11:53:45am, ranider

HDR
HDR Engineering, Inc.

ISSUE	DATE	DESCRIPTION
B	12-03-15	ADDENDUM #4
A	JUNE-2015	ISSUED FOR BID

PROJECT MANAGER	C. OLSON
DESIGNED	M MOSTAFA
DESIGNED	
CHECKED	C. OLSON
DRAWN	D. ELDREDGE
DATE	JUNE 30, 2015
PROJECT NUMBER	215786

REGISTERED PROFESSIONAL ENGINEER MOHAMMADREZA MOSTAFA NO. 78649 EXP. 09/30/17 CIVIL STATE OF CALIFORNIA

CITY OF PINOLE CALIFORNIA 1903

PINOLE/HERCULES WATER POLLUTION CONTROL PLANT UPGRADE CLIENT PN

STRUCTURAL

AERATION BASINS EXPANSION ENLARGED PLANS, SECTIONS AND DETAILS

0 1" 2"

FILENAME	215786-31S112
SCALE	AS NOTED

SHEET **31S112**

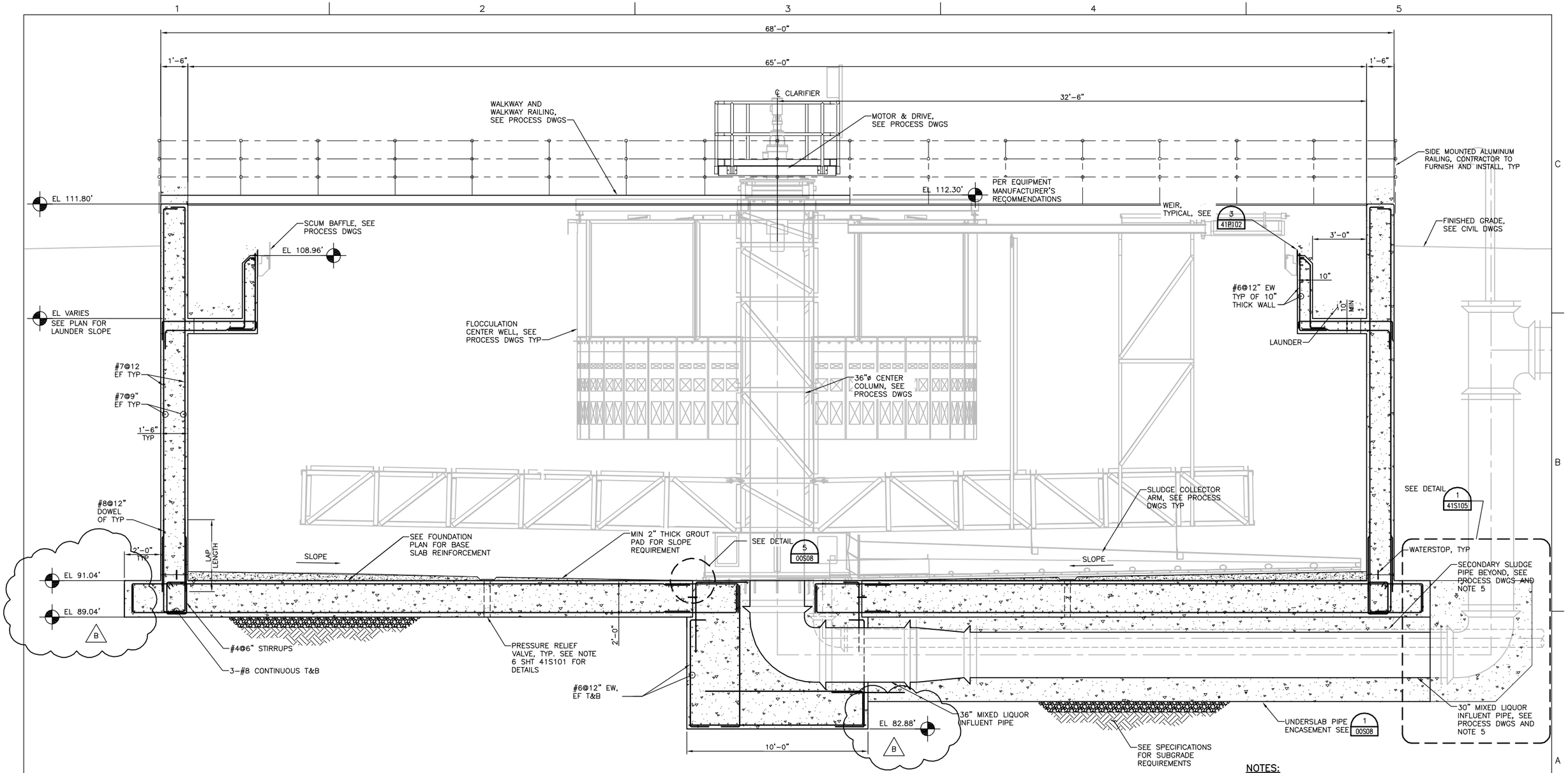

SECTION

SCALE: 3/8"=1'-0"

A
41S101
41S102

NOTES:

1. FOR GENERAL NOTES, SEE SHEET 00S01 AND 00S02.
2. FOR SPECIAL INSPECTION REQUIREMENTS, SEE 00S03 AND 00S04.
3. FOR TYPICAL CONCRETE DETAILS, SEE SHEETS 00S05 THRU 00S08.
4. FOR TYPICAL REINFORCING DETAILS, SEE 00S09.
5. COORDINATE PIPING AND EQUIPMENT LOCATIONS, ORIENTATION, ELEVATIONS, AND CONCRETE PENETRATIONS WITH PROCESS/MECHANICAL DRAWINGS.
6. FOR TYPICAL RAILING DETAILS, SEE SHEET 00S19 THRU 00S20.

FILE: 215786-41S103.dwg
DATE: Dec 03, 2015-10:52:55am, ranider

HDR
HDR Engineering, Inc.

ISSUE	DATE	DESCRIPTION
B	12-03-15	ADDENDUM #4
A	JUNE-2015	ISSUED FOR BID

PROJECT MANAGER	C. OLSON
DESIGNED	Z. LI
DESIGNED	
CHECKED	O. TAVANGAR
DRAWN	D. ELDREDGE
DATE	JUNE 30, 2015
PROJECT NUMBER	215786

REGISTERED PROFESSIONAL ENGINEER
ZHEN LI
NO. 74809
EXP. 12/31/17
CIVIL
STATE OF CALIFORNIA

CITY OF PINOLE CALIFORNIA 1903

PINOLE/HERCULES WATER POLLUTION CONTROL PLANT UPGRADE CLIENT PN

STRUCTURAL

SECONDARY CLARIFIERS NO 1 AND NO 2 SECTION

0 1" 2"

FILENAME	215786-41S103
SCALE	AS NOTED

SHEET **41S103**

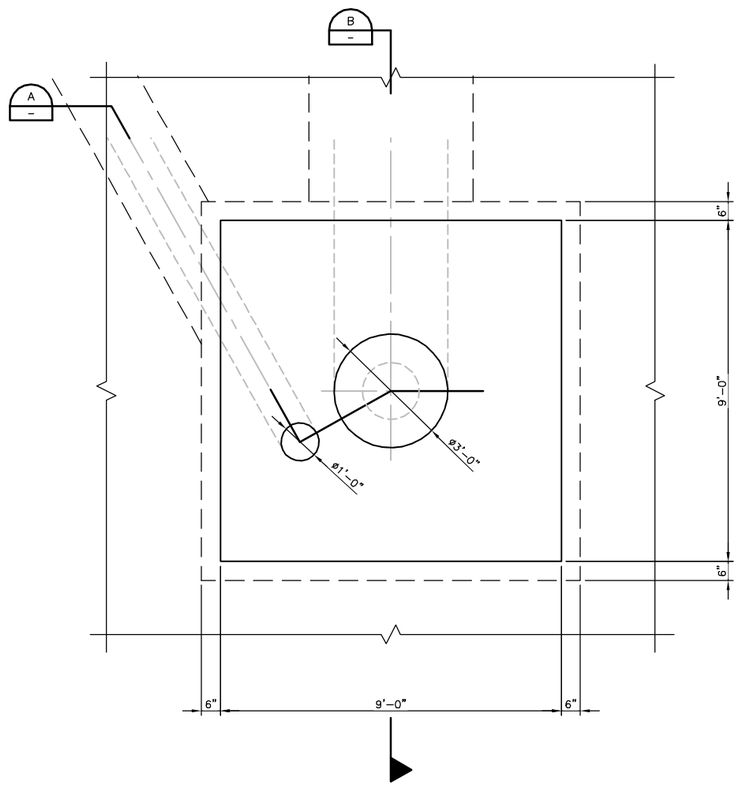

ENLARGED PLAN
1/2" = 1'-0"
1 / 41S101

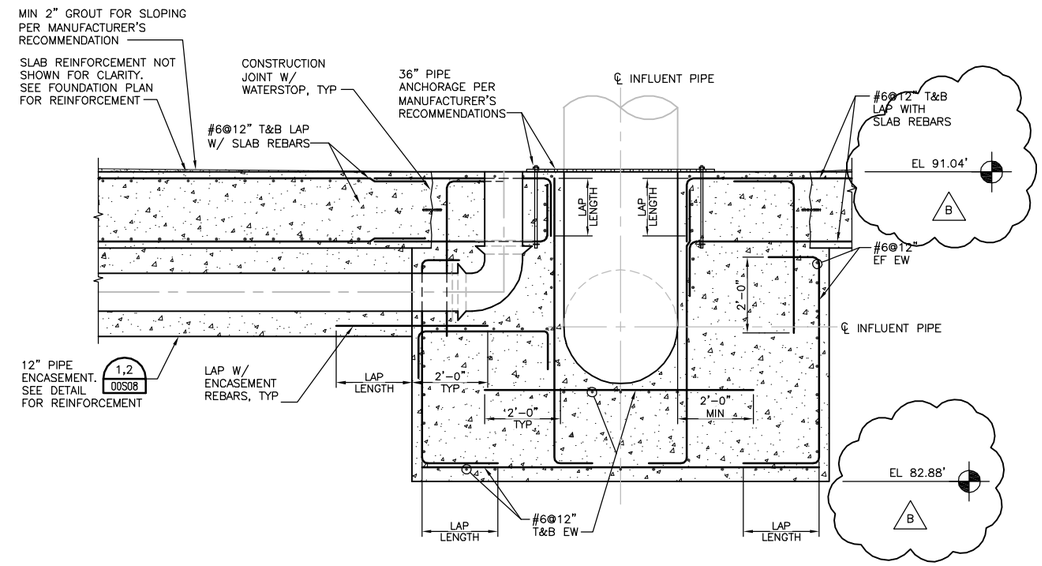

SECTION
1/2" = 1'-0"
A

NOTE: SEE SECTION A FOR ADDITIONAL INFORMATION NOT SHOWN HERE.

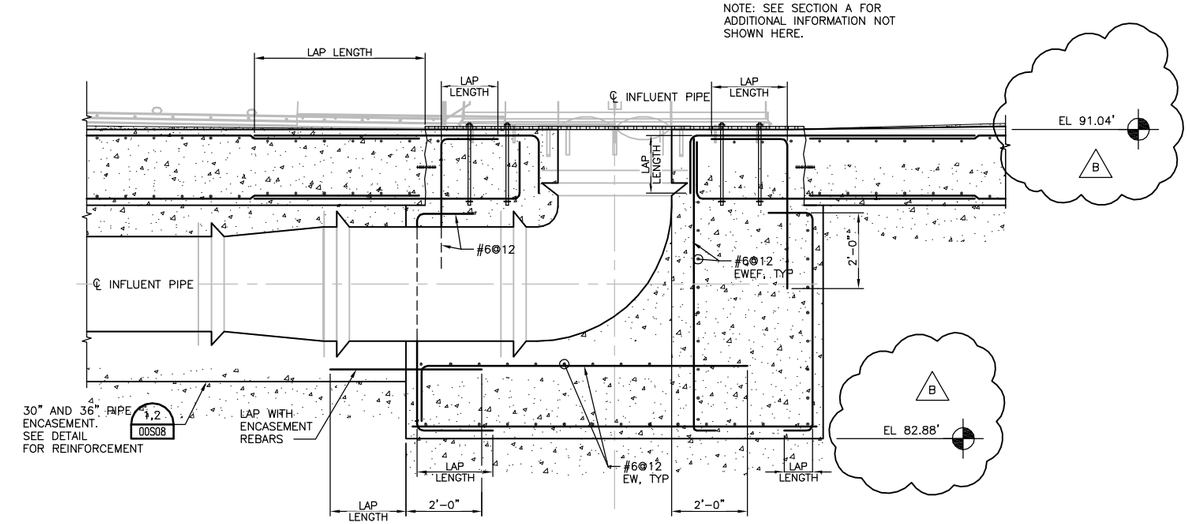

SECTION
1/2" = 1'-0"
B

FILE: 215786-41S104.dwg
DATE: Dec 03, 2015-10:53:27am, rsnider

HDR
HDR Engineering, Inc.

ISSUE	DATE	DESCRIPTION
B	12-03-15	ADDENDUM #4
A	JUNE-2015	ISSUED FOR BID

PROJECT MANAGER	C. OLSON
DESIGNED	Z. LI
DESIGNED	
CHECKED	C. OLSON
DRAWN	D. ELDREDGE
DATE	JUNE 30, 2015
PROJECT NUMBER	215786

REGISTERED PROFESSIONAL ENGINEER
ZHEN LI
NO. 74809
EXP. 12/31/17
CIVIL
STATE OF CALIFORNIA

CITY OF PINOLE CALIFORNIA 1903

PINOLE/HERCULES
WATER POLLUTION
CONTROL PLANT UPGRADE
CLIENT PN

STRUCTURAL

SECONDARY CLARIFIERS NO 1 AND NO 2
ENLARGED PLAN AND SECTIONS

0 1" 2"

FILENAME	215786-41S104
SCALE	AS NOTED

SHEET
41S104

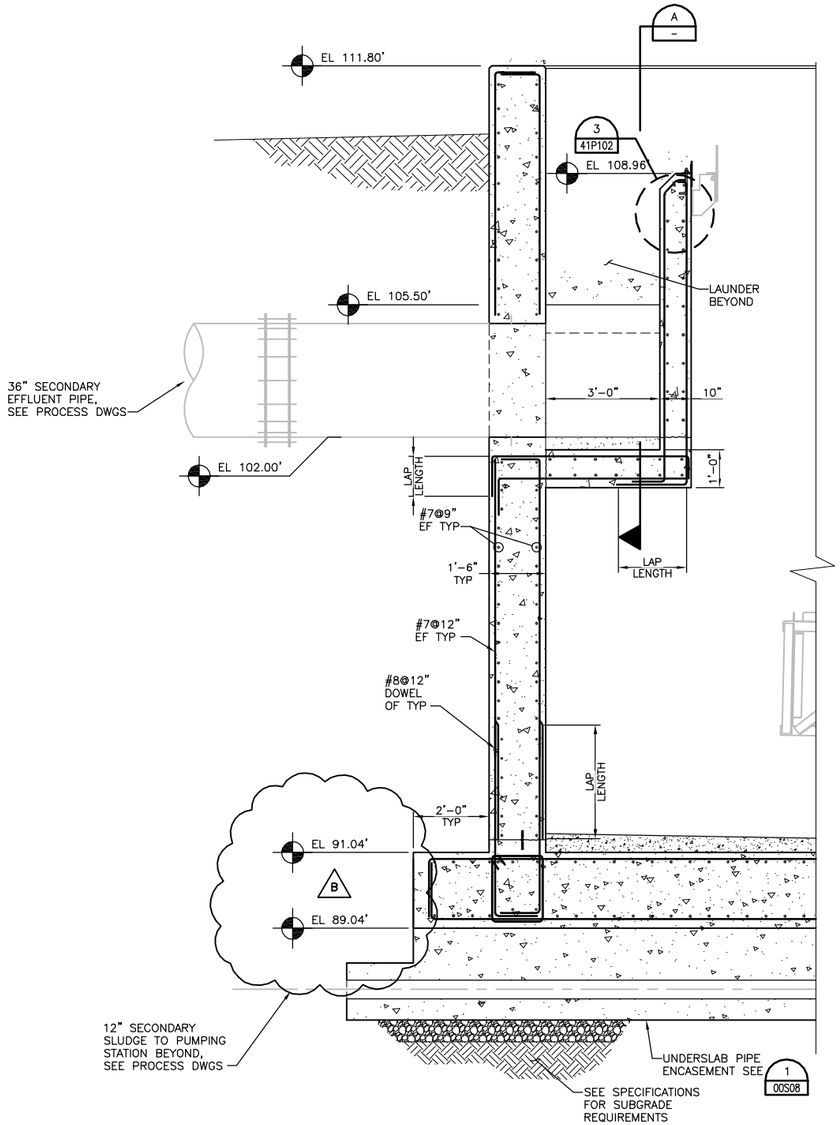

SECTION
SCALE: 1/2" = 1'-0"
B
41S101
41S102

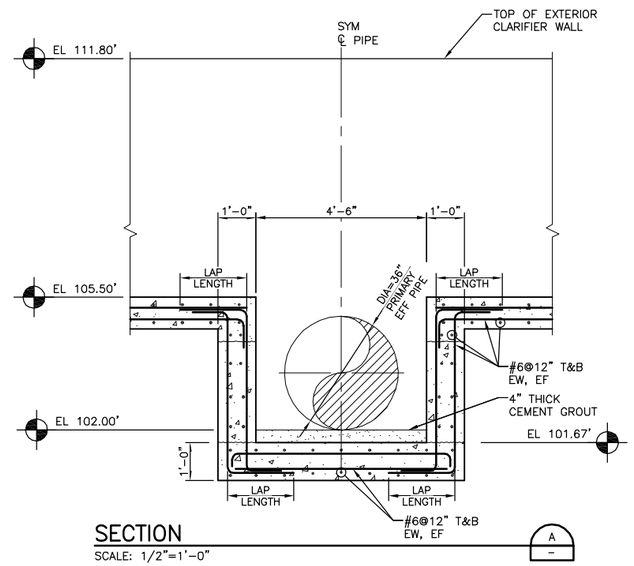

SECTION
SCALE: 1/2"=1'-0"

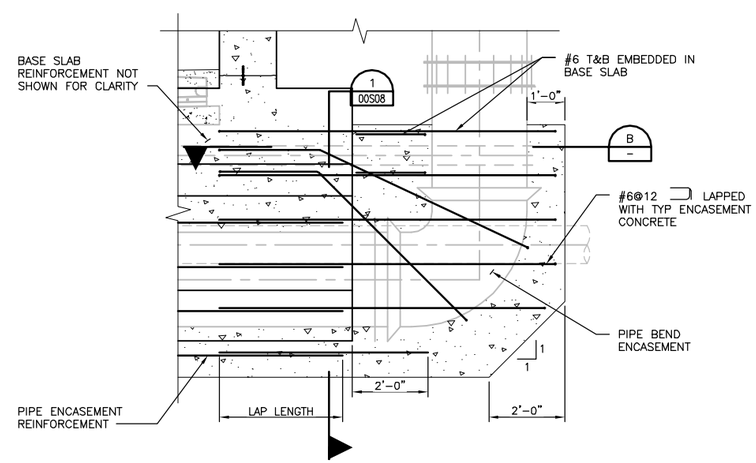

PIPE BEND ENCASEMENT
SCALE: 1/2"=1'-0"
1
41S103

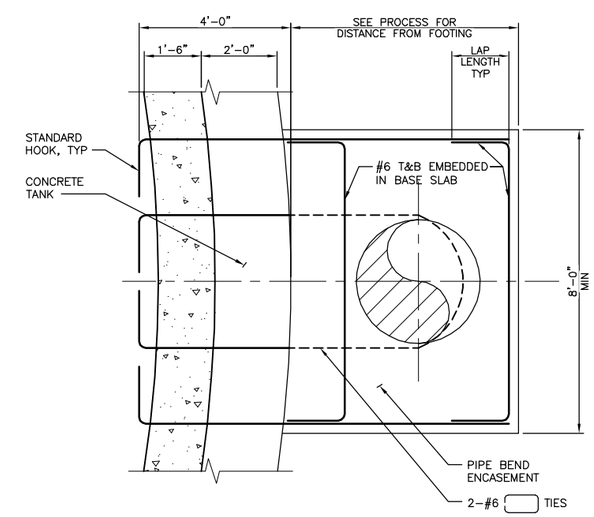

SECTION
SCALE: 1/2"=1'-0"
B

FILE: 215786-41S105.dwg
DATE: Dec 03, 2015-10:54:44am, rsnider

HDR
HDR Engineering, Inc.

ISSUE	DATE	DESCRIPTION
B	12-03-15	ADDENDUM #4
A	JUNE 2015	ISSUED FOR BID

PROJECT MANAGER	C. OLSON
DESIGNED	Z. LI
DESIGNED	
CHECKED	O. TAVANGAR
DRAWN	D. ELDREDGE
DATE	JUNE 30, 2015
PROJECT NUMBER	215786

REGISTERED PROFESSIONAL ENGINEER
ZHEN LI
NO. 74809
EXP. 12/31/17
CIVIL
STATE OF CALIFORNIA

CITY OF PINOLE CALIFORNIA 1903

PINOLE/HERCULES
WATER POLLUTION
CONTROL PLANT UPGRADE
CLIENT PN

STRUCTURAL

SECONDARY CLARIFIERS NO 1 AND NO 2
SECTIONS

0 1" 2"

FILENAME	215786-41S105
SCALE	AS NOTED

SHEET
41S105

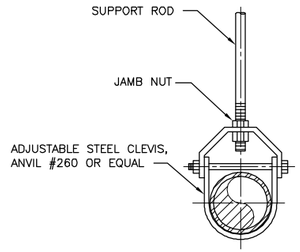

1/2" THROUGH 24" PIPE

PIPE HANGER (1)

NTS

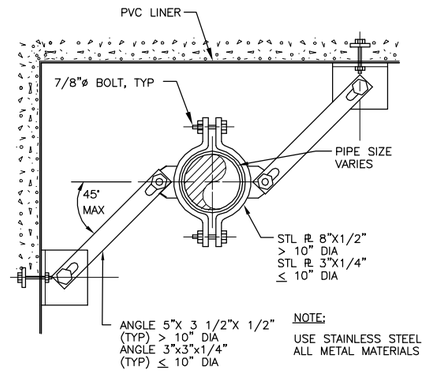

NOTE:

USE STAINLESS STEEL FOR ALL METAL MATERIALS

VERTICAL PIPE HANGER (2)

NTS

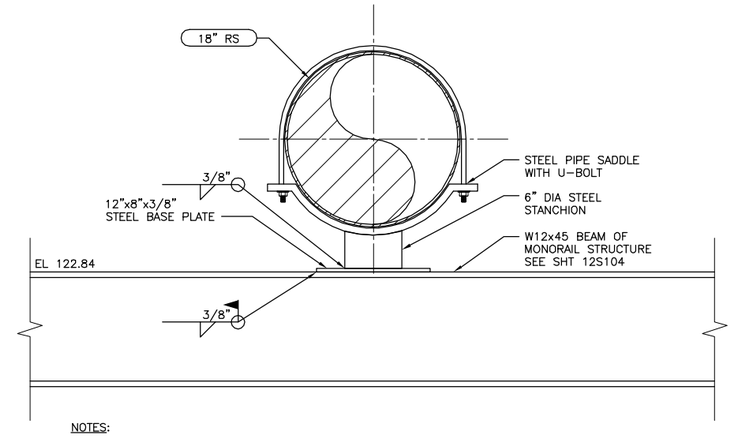

NOTES:

1. CONTRACTOR TO FABRICATE SADDLE STANCHION AND BASE PLATE TO FIT WITHIN CLEAR DIMENSION BETWEEN PIPE AND W12x45 BEAM.
2. SADDLE SUPPORT WITH U-BOLT TO BE SIMILAR TO ANVIL FIGURE 259.

18" RS PIPE SUPPORT FROM MONORAIL STRUCTURE

1 1/2" = 1'-0"

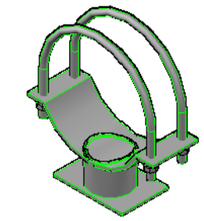

PERSPECTIVE VIEW

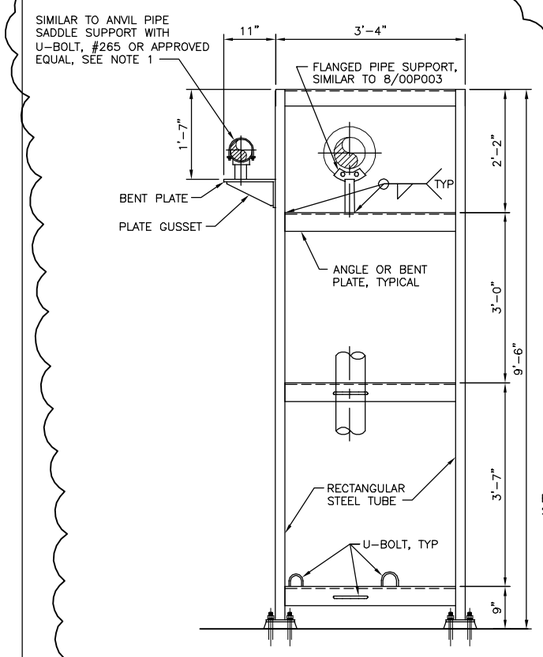

B

PIPE SUPPORT @ GRIT VORTEX WASHER

3/4" = 1'-0"

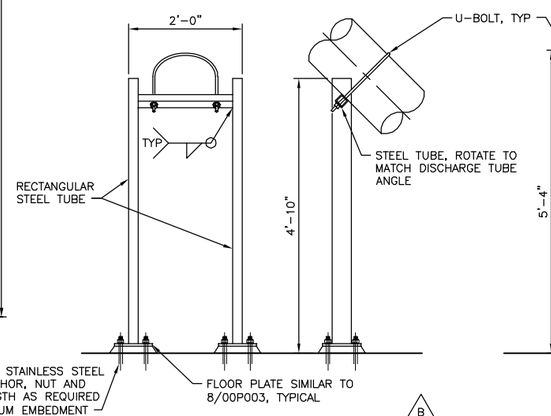

B

PIPE SUPPORT @ WASHER/COMPACTOR DISCHARGE

3/4" = 1'-0"

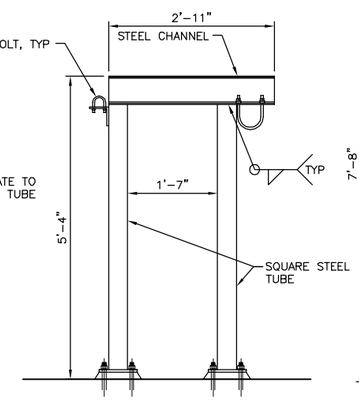

B

PIPE SUPPORT @ SCREW CONVEYOR

3/4" = 1'-0"

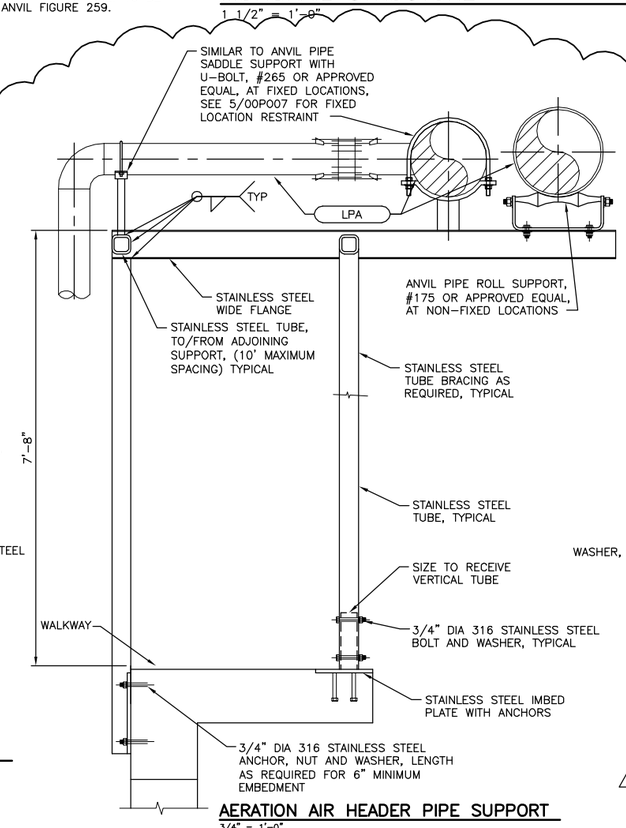

AERATION AIR HEADER PIPE SUPPORT

3/4" = 1'-0"

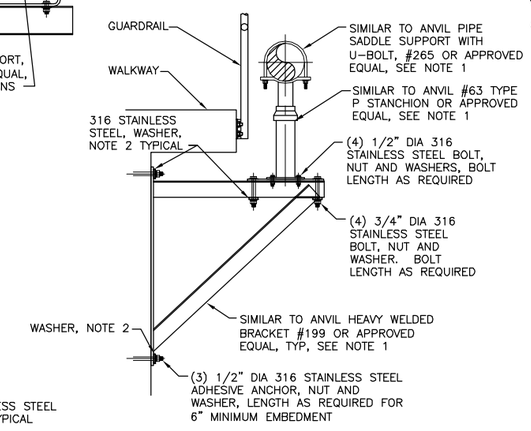

AERATION AIR LATERAL PIPE SUPPORT

3/4" = 1'-0"

B

NOTES:

1. ALL SUPPORTS, BRACKETS AND ANCHOR BOLTS TO BE 316 STAINLESS STEEL.
2. 1/4"x1 1/2" SQUARE PLATE WASHER, CENTER DRILL FOR ANCHOR BOLT, 316 STAINLESS STEEL.

FILE: 215786-00P004.dwg
DATE: Dec 03, 2015-3:30:59pm, rsnider

HDR
HDR Engineering, Inc.

ISSUE	DATE	DESCRIPTION
B	12-03-15	ADDENDUM #4
A	JUNE 2015	ISSUED FOR BID

PROJECT MANAGER	C. OLSON
DESIGNED	T. KONTONICKAS
DESIGNED	
CHECKED	C. OLSON
DRAWN	B. DOWN
DATE	JUNE 30, 2015
PROJECT NUMBER	215786

REGISTERED PROFESSIONAL ENGINEER THEODORE H. KONTONICKAS NO. 29378 EXP. 06/30/17 MECHANICAL STATE OF CALIFORNIA 12-03-15

CITY OF PINOLE CALIFORNIA 1903

PINOLE/HERCULES WATER POLLUTION CONTROL PLANT UPGRADE CLIENT PN

PROCESS

STANDARD DETAILS 4

0 1" 2"

FILENAME	215786-00P004
SCALE	AS NOTED

SHEET **00P004**

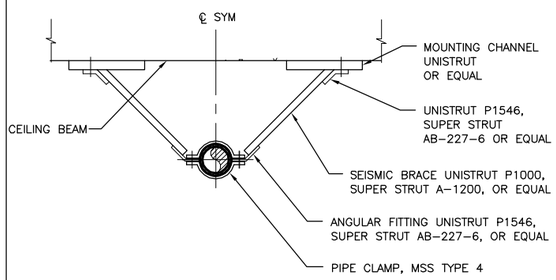

TYPE A SEISMIC LATERAL BRACING (1 / –)

NTS

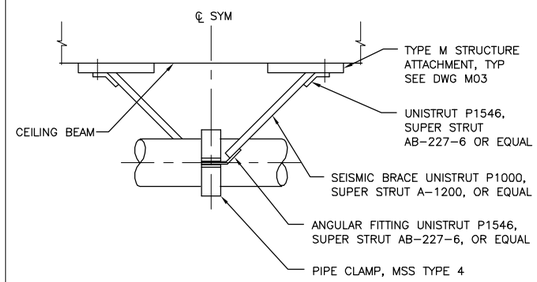

TYPE A SEISMIC LONGITUDINAL BRACING (2 / –)

NTS

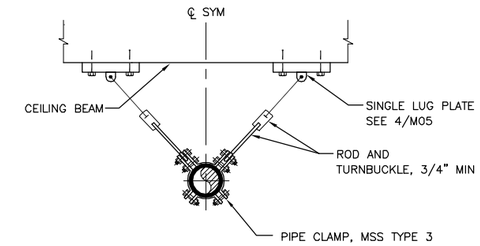

TYPE B SEISMIC LATERAL BRACING (3 / –)

NTS

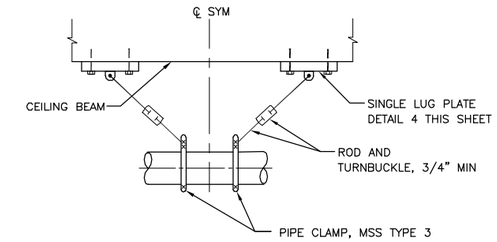

TYPE B SEISMIC LATERAL BRACING (4 / –)

NTS

TABLE C – PIPE SPAN FOR SEISMIC BRACING		
NORMAL PIPE SIZES (INCHES)	MAXIMUM PIPE SPAN (FEET)	ROD SIZE (INCHES)
2	15	3/8
2-1/2	15	3/8
3	15	3/8
4	15	3/8
6	20	1/2
8	20	5/8
10	30	4/5
12	30	1
14	30	1
16	35	1
18	35	1

TABLE D – HANGER TEMPERATURE AND MATERIALS FOR SEISMIC BRACING											
X INDICATES PIPE HANGERS SUITABLE FOR SEISMIC BRACING AT CONDITIONS LISTED BELOW	SEE DWG M02 FOR PIPE HANGER TYPE										
	1	2	3	4	5	6	7	8	9	10	11
SERVICE TEMPERATURE											
33\F-59\F OR – INSULATED			X						X		X
120\F-450\F – UNINSULATED	X	X	X			X	X		X	X	X
60\F-119\F	X	X	X			X	X		X	X	X
PIPING MATERIALS											
STEEL	X	X	X			X	X		X		X
COPPER		X				X	X				
PLASTIC	X	X				X	X				X
CAST IRON	X	X				X	X			X	X

SEISMIC BRACING NOTES:

1. ALL PIPES SHALL BE BRACED TO RESIST LATERAL AND LONGITUDINAL SEISMIC LOADS IN ACCORDANCE WITH SPECIFICATION SECTION 15097.
2. SEE TABLE 'C' FOR MAXIMUM SPACING. AND PIPE SIZES.
3. SEE TABLE 'D' FOR ACCEPTABLE PIPE HANGERS.
4. PROVIDE 1/16" THICK NEOPRENE ISOLATION BETWEEN COPPER PIPING AND HANGERS.
5. MATERIAL: ALL COMPONENTS OF SEISMIC BRACING SHALL BE FABRICATED OF TYPE 316 STAINLESS STEEL.

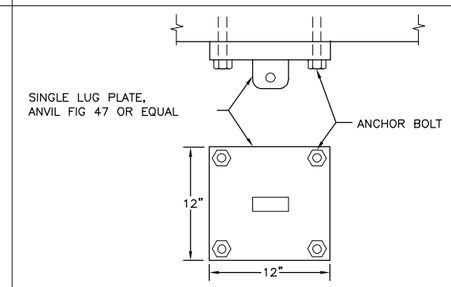

MAXIMUM ALLOWABLE LOAD:			
PLATE THICKNESS	ROD SIZE	BOLT SIZE	LOAD
3/4"	1"	3/4"	4960 LBS
1"	1 1/4"	7/8"	8000 LBS
1"	1 1/2"	1"	11630 LBS

ATTACH ROD TO TYPE 316 STAINLESS STEEL PLATE WITH FORGED TYPE 316 STAINLESS STEEL CLEVIS, ANVIL FIG 299 OR EQUAL

DETAIL (4 / –)

NTS

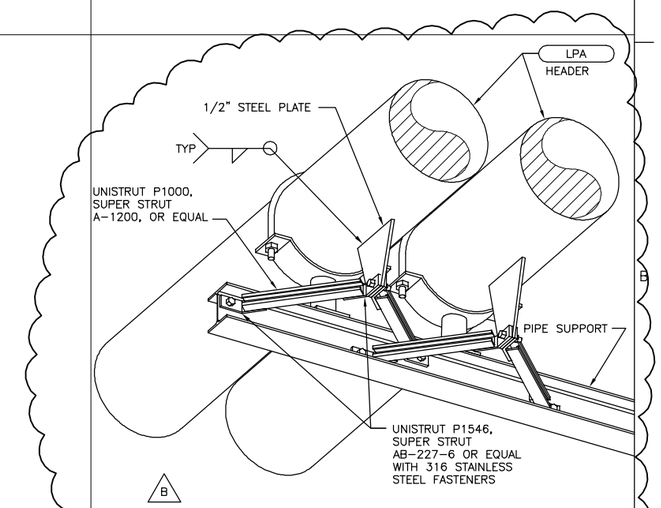

FIXED LOCATION PIPE RESTRAINT (5 / –)

NTS

FILE: 215786-00P007.dwg
DATE: Dec 03, 2015-9:29:20am, rsnider

HDR Engineering, Inc.

ISSUE	DATE	DESCRIPTION
B	12-03-15	ADDENDUM #4
A	JUNE 2015	ISSUED FOR BID

PROJECT MANAGER	C. OLSON
DESIGNED	T. KONTONICKAS
DESIGNED	
CHECKED	C. OLSON
DRAWN	R. SNIDER
DATE	JUNE 30, 2015
PROJECT NUMBER	215786

REGISTERED PROFESSIONAL ENGINEER THEODORE H. KONTONICKAS NO. 29378 EXP. 06/30/17 MECHANICAL STATE OF CALIFORNIA 12-03-15

CITY OF PINOLE CALIFORNIA 1903

PINOLE/HERCULES WATER POLLUTION CONTROL PLANT UPGRADE CLIENT PN

PROCESS

STANDARD DETAILS 7

0 1" 2"

FILENAME	
SCALE	NOTED

SHEET **00P007**

NOTE:

1. SEE SERIES 13 STRUCTURAL SHEETS FOR CELLULAR CONCRETE FILL IN CHANNELS.
2. COORDINATE 3W CONNECTIONS WITH EQUIPMENT MFR AND INSTRUMENTATION DRAWINGS.
3. CONTRACTOR SHALL DESIGN CANOPY, STRUCTURAL SUPPORTS, AND FOOTINGS PER SPECIFICATION SECTION 13121 AND STRUCTURAL DESIGN CRITERIA PER SHEET 00S00.

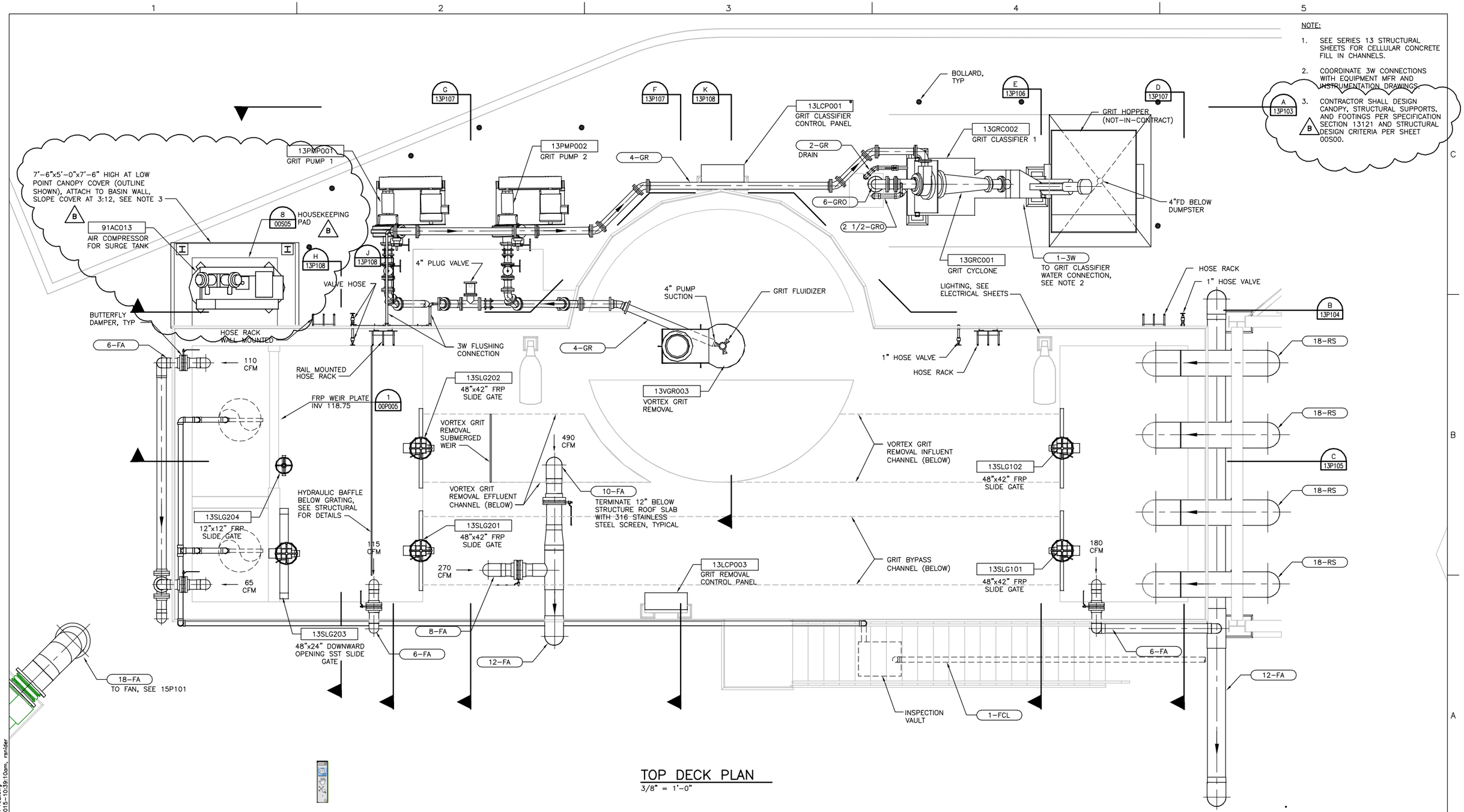

TOP DECK PLAN

3/8" = 1'-0"

FILE: 215786-13P102.dwg
DATE: Dec 03, 2015-10:39:10am, rander

HDR Engineering, Inc.

ISSUE	DATE	DESCRIPTION
B	12-03-15	ADDENDUM #4
A	JUNE 2015	ISSUED FOR BID

PROJECT MANAGER	C. OLSON
DESIGNED	R. NATOLI
DESIGNED	M. RAMANATHAN
CHECKED	C. OLSON
DRAWN	B. DOWN
DATE	JUNE 30, 2015
PROJECT NUMBER	215786

REGISTERED PROFESSIONAL ENGINEER ROBERT G. NATOLI NO. 78271 EXP. 09/30/17 CIVIL STATE OF CALIFORNIA 12-03-15

CITY OF PINOLE CALIFORNIA 1903

PINOLE/HERCULES WATER POLLUTION CONTROL PLANT UPGRADE CLIENT PN

PROCESS

GRIT BASIN TOP DECK PLAN

0 1" 2"

FILENAME	215786-13P102
SCALE	AS NOTED

SHEET 13P102

NOTES:

1. CENTER COLUMN, SUPPORT CAGE, SLUDGE COLLECTOR AND SUPPORT, SLUDGE MANIFOLD, SCUM SKIMMER AND SUPPORT, SCUM BEACH AND SUPPORT, WALKWAY, PLATFORM, HANDRAILING, DRIVE MECHANISM, AND CONTROL PANEL PER CLARIFIER MECHANISM FABRICATOR (SEE SPECIFICATION SECTION 11125).
2. SEE SPECIFICATION SECTION 11151 FOR FRP SLUDGE PROTECTION SYSTEM, AND ITS SUPPORT SYSTEM, WEIRS AND SCUM PLATES (ALL SUPPLIED BY FRP FABRICATORS).

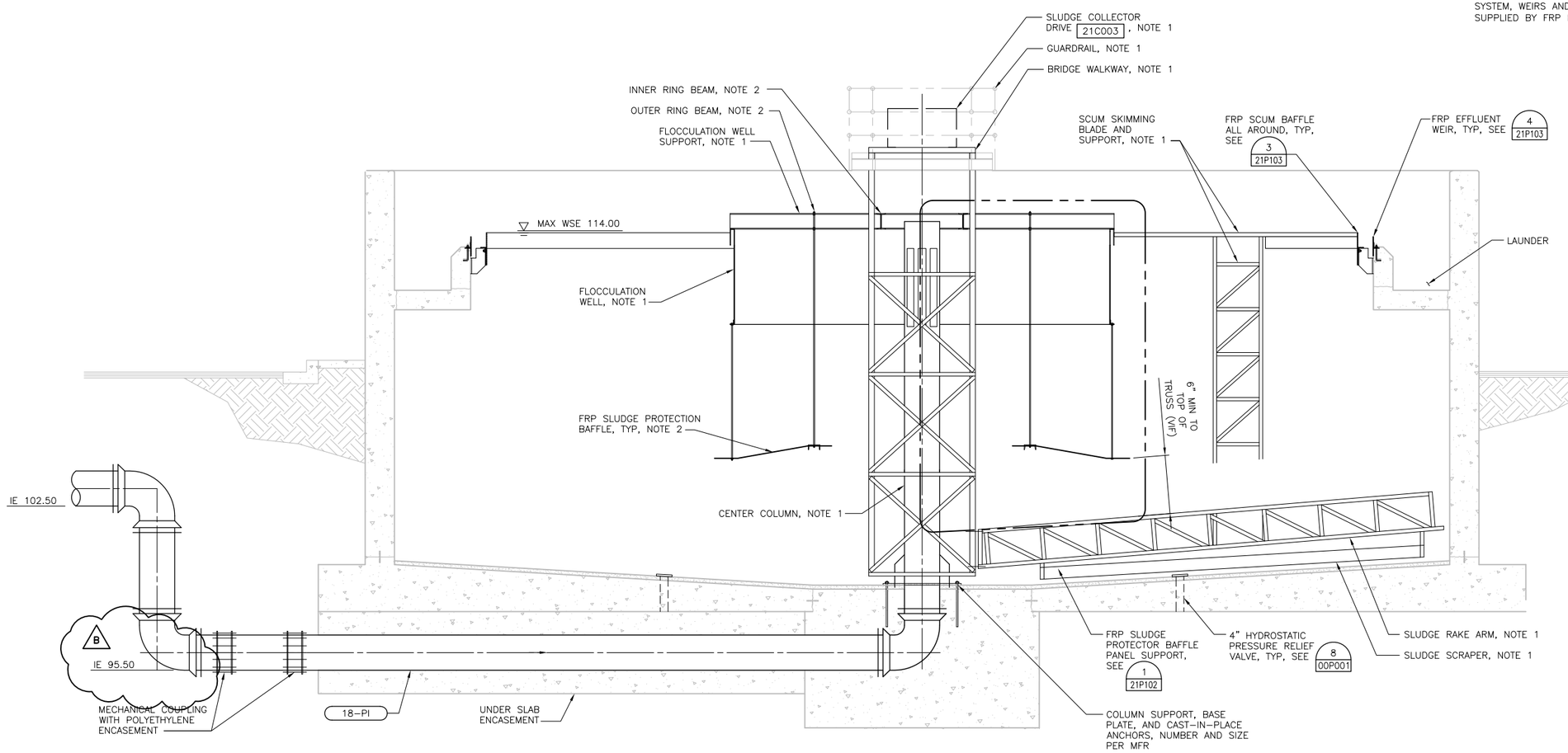

SECTION A 21P131

3/8" = 1'-0"

FILE: 215786-21P132.dwg
DATE: Dec 03, 2015-3:42:47pm, rsnider

HDR
HDR Engineering, Inc.

ISSUE	DATE	DESCRIPTION
B	12-03-15	ADDENDUM #4
A	JUNE 2015	ISSUED FOR BID

PROJECT MANAGER	C. OLSON
DESIGNED	T. KONTONICKAS
DESIGNED	H. GERGES
CHECKED	C. OLSON
DRAWN	M. FOYLE
DATE	JUNE 30, 2015
PROJECT NUMBER	215786

REGISTERED PROFESSIONAL ENGINEER THEODORE H. KONTONICKAS NO. 29378 EXP. 06/30/17 MECHANICAL STATE OF CALIFORNIA 12-03-15

CITY OF PINOLE CALIFORNIA 1903

PINOLE/HERCULES WATER POLLUTION CONTROL PLANT UPGRADE CLIENT PN

PROCESS

PRIMARY CLARIFIER NO 3 SECTION 1

0 1" 2"

FILENAME	215786-21P132
SCALE	AS NOTED

SHEET **21P132**

NOTES:

1. CENTER COLUMN, SUPPORT CAGE, SLUDGE COLLECTOR AND SUPPORT, SLUDGE MANIFOLD, SCUM SKIMMER AND SUPPORT, SCUM BEACH AND SUPPORT, WALKWAY, PLATFORM, HANDRAILING, DRIVE MECHANISM, AND CONTROL PANEL PER CLARIFIER MECHANISM FABRICATOR (SEE SPECIFICATION SECTION 11125).
2. SEE SPECIFICATION SECTION 11151 FOR FRP SLUDGE PROTECTION SYSTEM, AND ITS SUPPORT SYSTEM, WEIRS AND SCUM PLATES (ALL SUPPLIED BY FRP FABRICATORS).

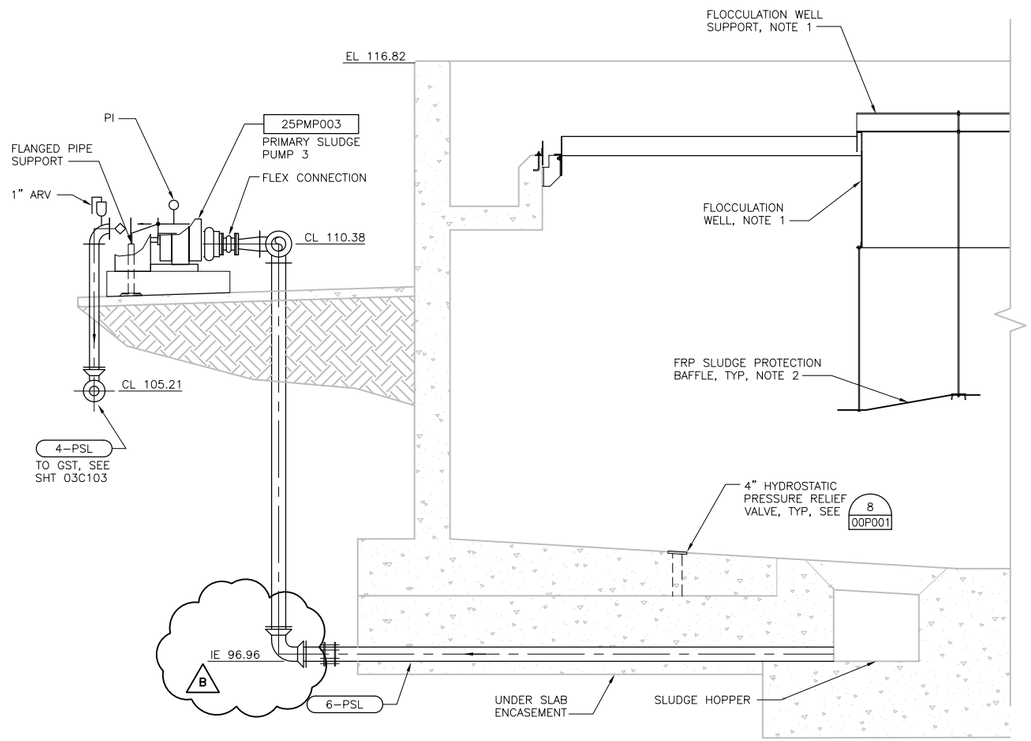

SECTION C 21P131
3/8" = 1'-0"

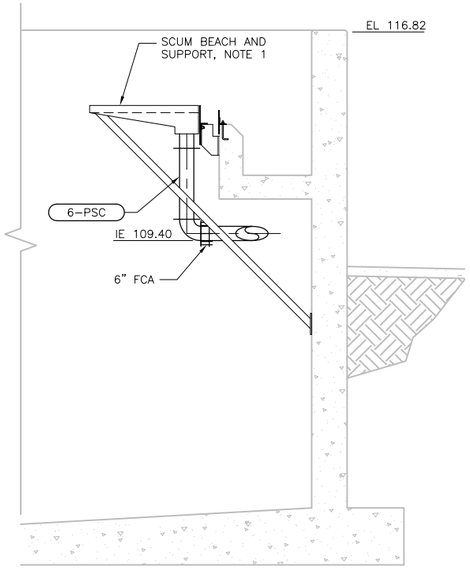

SECTION D 21P131
3/8" = 1'-0"

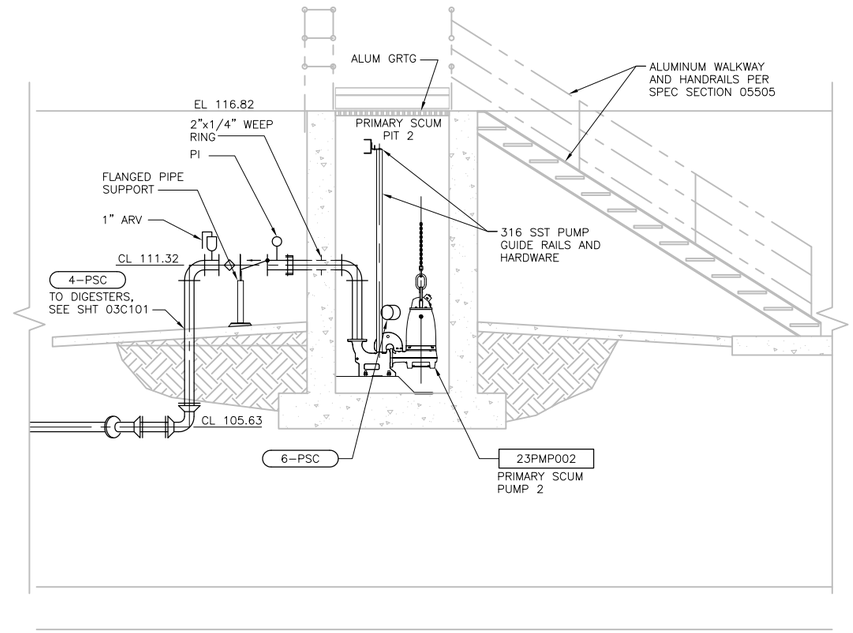

SECTION E 21P131
3/8" = 1'-0"

FILE: 215786-21P134.dwg
DATE: Dec 03, 2015-9:31:48am, rsnider

HDR
HDR Engineering, Inc.

ISSUE	DATE	DESCRIPTION
B	12-03-15	ADDENDUM #4
A	JUNE 2015	ISSUED FOR BID

PROJECT MANAGER	C. OLSON
DESIGNED	T. KONTONICKAS
DESIGNED	H. GERGES
CHECKED	C. OLSON
DRAWN	M. FOYLE
DATE	JUNE 30, 2015
PROJECT NUMBER	215786

REGISTERED PROFESSIONAL ENGINEER THEODORE H. KONTONICKAS NO. 29378 EXP. 06/30/17 MECHANICAL STATE OF CALIFORNIA 12-03-15

CITY OF PINOLE CALIFORNIA 1903

PINOLE/HERCULES WATER POLLUTION CONTROL PLANT UPGRADE CLIENT PN

PROCESS

PRIMARY CLARIFIER NO 3 SECTIONS 3

0 1" 2"

FILENAME	215786-21P134
SCALE	AS NOTED

SHEET **21P134**

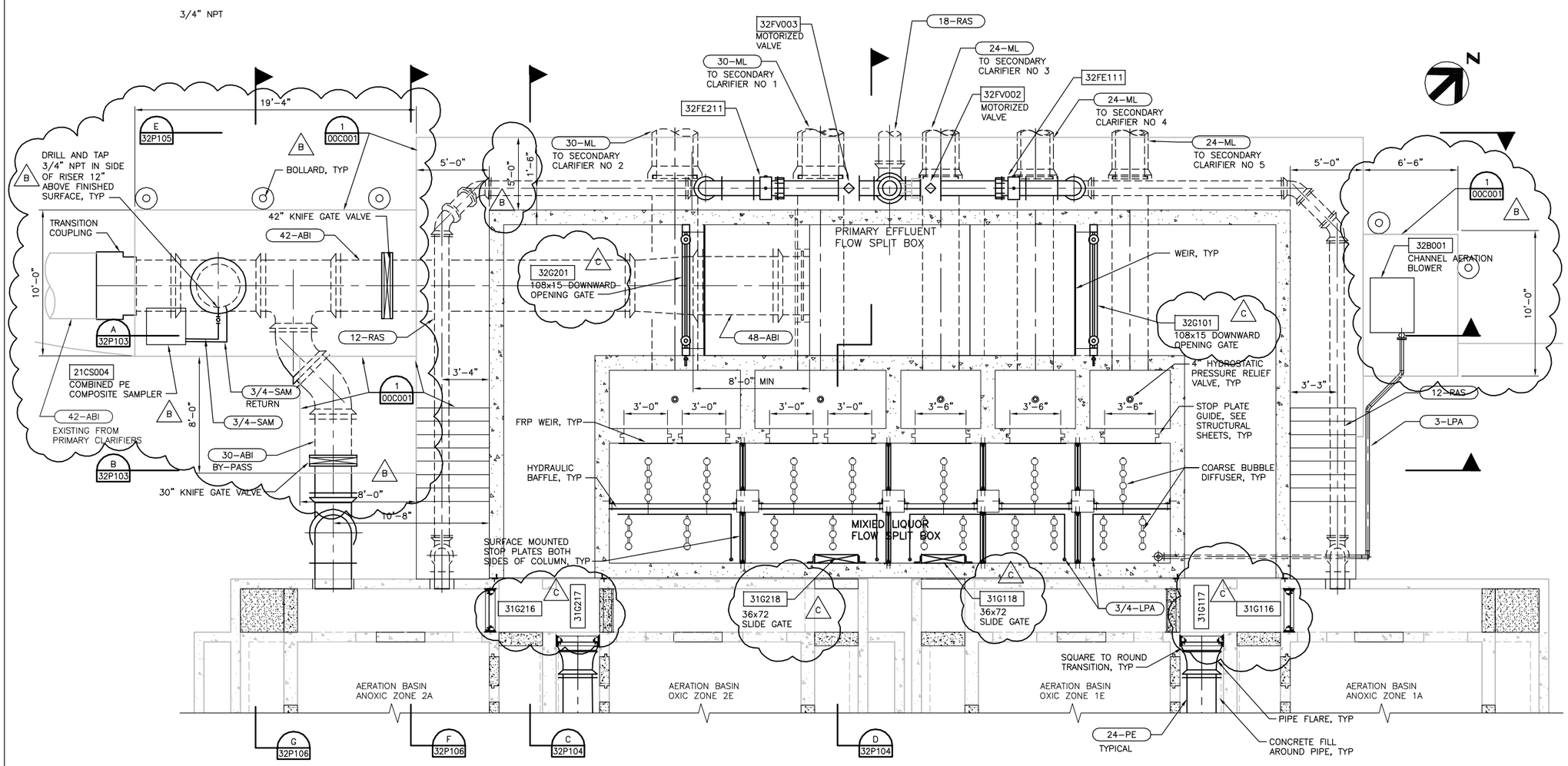

SECTIONAL PLAN AT EL 112.0

1/4" = 1'-0"

FILE: 215786-32P101.dwg
DATE: Dec 03, 2015-9:33:02am, rsnider

HDR
HDR Engineering, Inc.

ISSUE	DATE	DESCRIPTION
C	12-03-15	ADDENDUM #4
B	11-20-15	ADDEMDUM #2
A	JUNE 2015	ISSUED FOR BID

PROJECT MANAGER	C. OLSON
DESIGNED	T. KONTONICKAS
DESIGNED	
CHECKED	C. OLSON
DRAWN	B.DOWN
DATE	JUNE 30, 2015
PROJECT NUMBER	215786

REGISTERED PROFESSIONAL ENGINEER CRAIG A. OLSON NO. 39819 EXP. 12/31/15 CIVIL STATE OF CALIFORNIA

CITY OF PINOLE CALIFORNIA 1903

PINOLE/HERCULES
WATER POLLUTION
CONTROL PLANT UPGRADE
CLIENT PN

PROCESS
PRIMARY EFFLUENT AND MIXED LIQUOR FLOW SPLIT BOX
SECTIONAL PLAN AT EL 112.0

0 1" 2"

FILENAME	215786-32P101
SCALE	AS NOTED

SHEET **32P101**

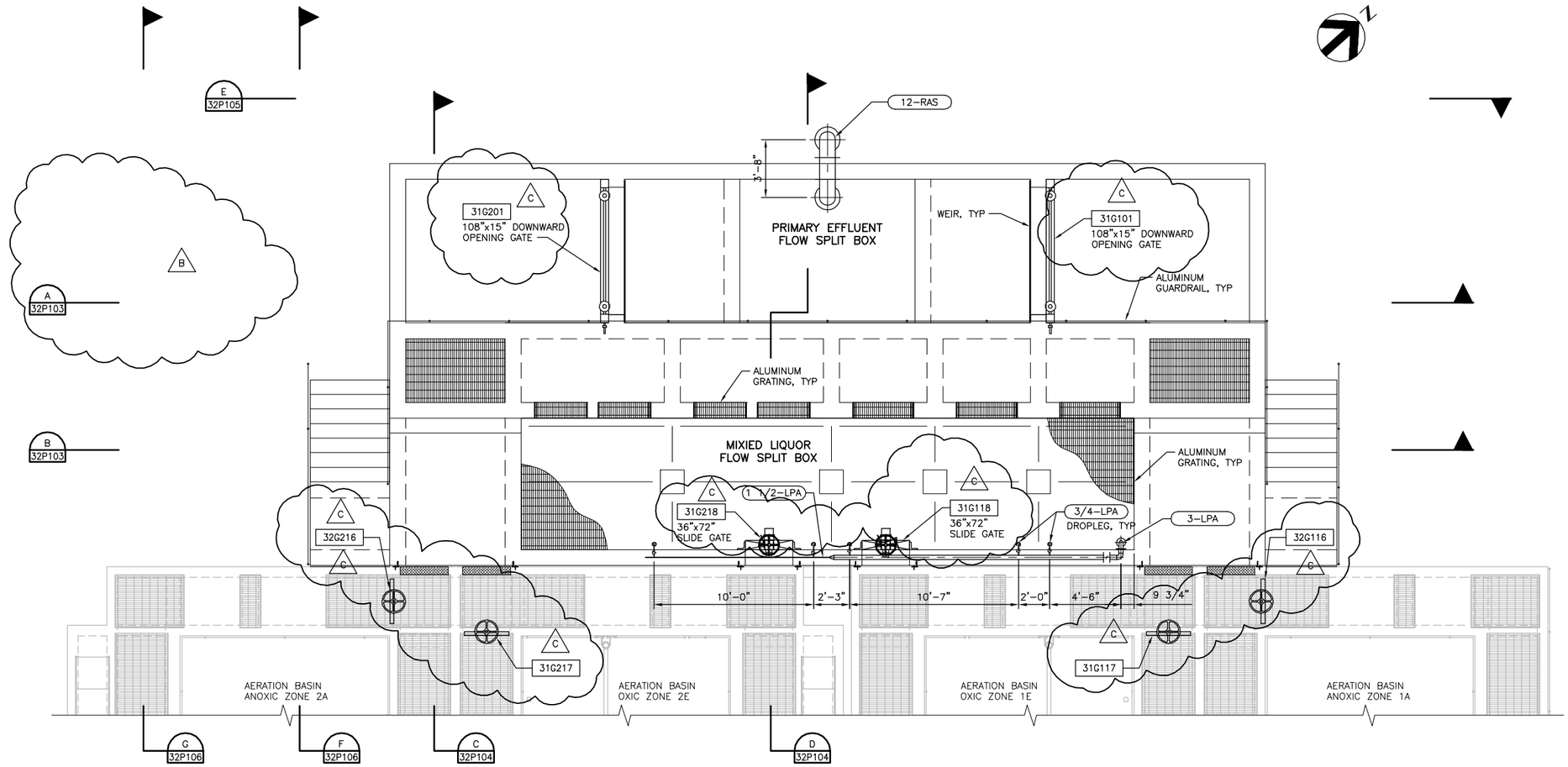

DECK PLAN

1/4" = 1'-0"

FILE: 215786-32P102.dwg
DATE: Dec 03, 2015-9:35:25am, ranider

HDR

HDR Engineering, Inc.

ISSUE	DATE	DESCRIPTION
C	12-03-15	ADDENDUM #4
B	11-20-15	ADDENDUM #2
A	JUNE 2015	ISSUED FOR BID

PROJECT MANAGER	C. OLSON
DESIGNED	T. KONTONICKAS
DESIGNED	----
CHECKED	C. OLSON
DRAWN	B. DOWN
DATE	JUNE 30, 2015
PROJECT NUMBER	215786

REGISTERED PROFESSIONAL ENGINEER CRAIG A. OLSON NO. 39819 EXP. 12/31/15 CIVIL STATE OF CALIFORNIA

CITY OF PINOLE CALIFORNIA 1903

PINOLE/HERCULES
WATER POLLUTION
CONTROL PLANT UPGRADE
CLIENT PN

PROCESS
PRIMARY EFFLUENT AND MIXED LIQUOR
FLOW SPLIT BOX
DECK PLAN

0 1" 2"

FILENAME	215786-32P102
SCALE	AS NOTED

SHEET **32P102**

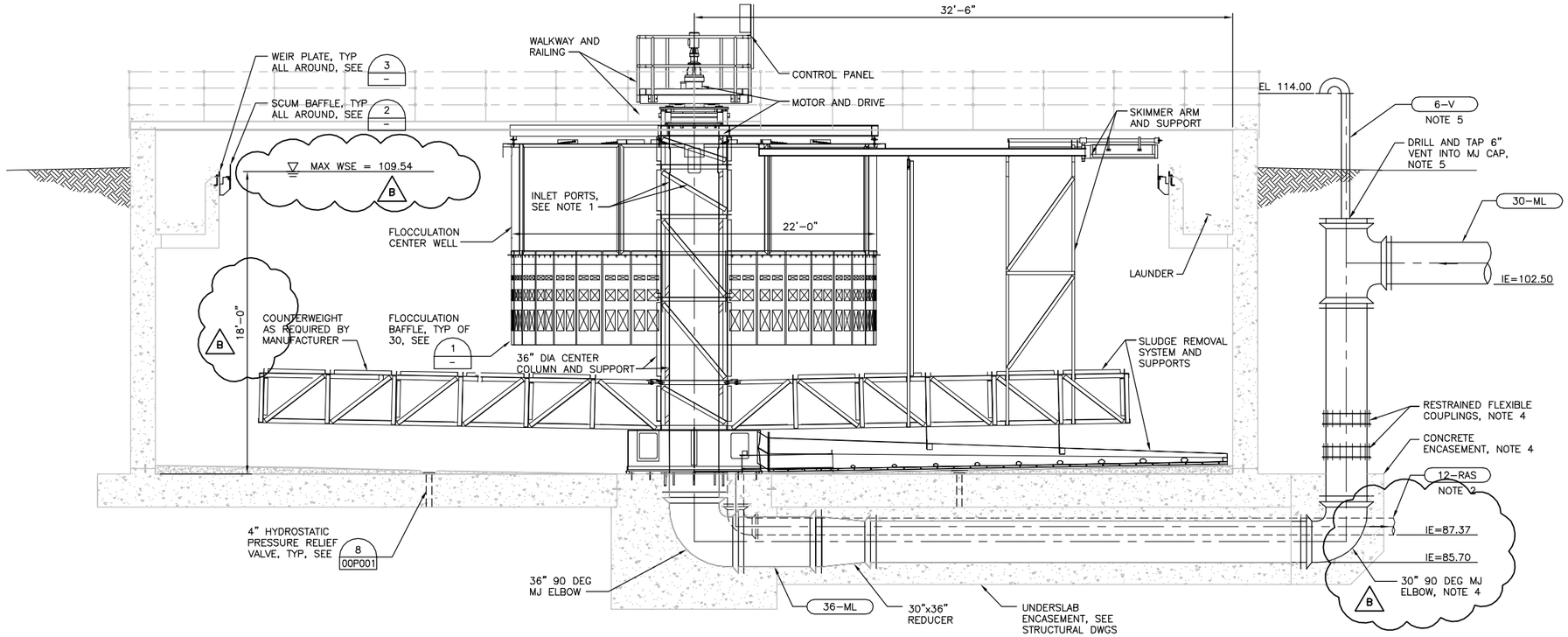

SECTION A 41P101

1/4" = 1'-0"

NOTES:

1. CENTER COLUMN, SUPPORT CAGE, SLUDGE COLLECTOR AND SUPPORT, SLUDGE MANIFOLD, SCUM SKIMMER AND SUPPORT, SCUM BEACH AND SUPPORT, WALKWAY, PLATFORM, HANDRAILING, DRIVE MECHANISM, AND CONTROL PANEL PER CLARIFIER MECHANISM FABRICATOR (SEE SPEC SECTION 11125).
2. PIPING ROTATED FROM TRUE POSITION, SEE PLAN FOR ORIENTATION.
3. SEE SPEC SECTION 11150 FOR FLOCCULATION BAFFLES, WEIR PLATES AND SCUM BAFFLES.
4. INFLUENT PIPING ARRANGEMENT IS SHOWN FOR CLARIFIER NO. 2. FOR CLARIFIER NO. 1, ENCASEMENT ENDS AT FOOTING AND FLEXIBLE COUPLINGS ARE IN THE HORIZONTAL ARRANGEMENT PER PLAN ON SHEET 41P101.
5. PROVIDE 6" VENT ON TEE AT CLARIFIER NO. 2 ONLY.

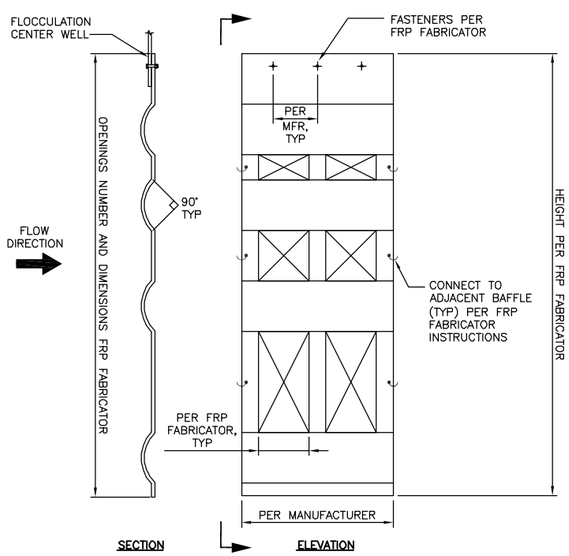

FLOCCULATION BAFFLE DETAIL 1 -

1" = 1'-0" SEE NOTE 3

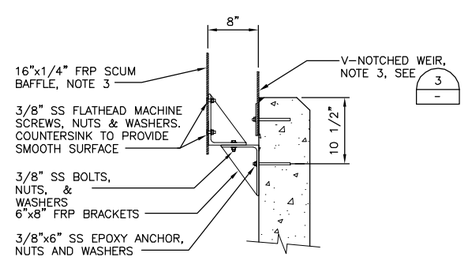

SCUM BAFFLE DETAIL 2 -

1" = 1'-0"

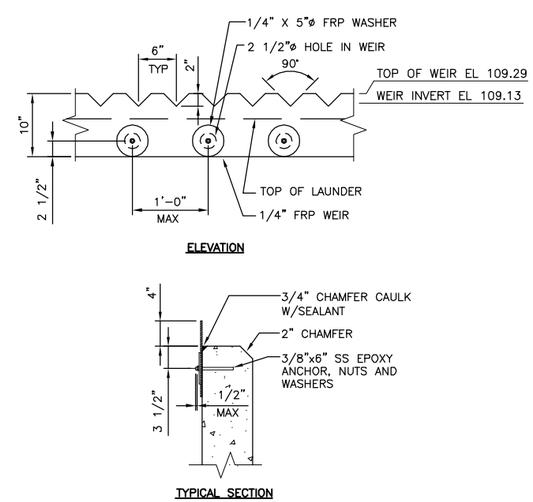

V-NOTCH WEIR DETAIL 3 -

1" = 1'-0" SEE NOTE 3

FILE: 215786-41P102.dwg
DATE: Dec 03, 2015-9:36:40am, ranider

HDR
HDR Engineering, Inc.

ISSUE	DATE	DESCRIPTION
B	12-03-15	ADDENDUM #4
A	JUNE 2015	ISSUED FOR BID

PROJECT MANAGER	C. OLSON
DESIGNED	T. KONTONICKAS
DESIGNED	
CHECKED	C. OLSON
DRAWN	M. FOYLE
DATE	JUNE 30, 2015
PROJECT NUMBER	215786

REGISTERED PROFESSIONAL ENGINEER THEODORE H. KONTONICKAS NO. 29378 EXP. 06/30/17 MECHANICAL STATE OF CALIFORNIA 12-03-15

CITY OF PINOLE CALIFORNIA 1903

PINOLE/HERCULES WATER POLLUTION CONTROL PLANT UPGRADE CLIENT PN

PROCESS

SECONDARY CLARIFIERS NO 1 AND NO 2 SECTION AND DETAILS

0 1" 2"

FILENAME	215786-41P102
SCALE	AS NOTED

SHEET **41P102**

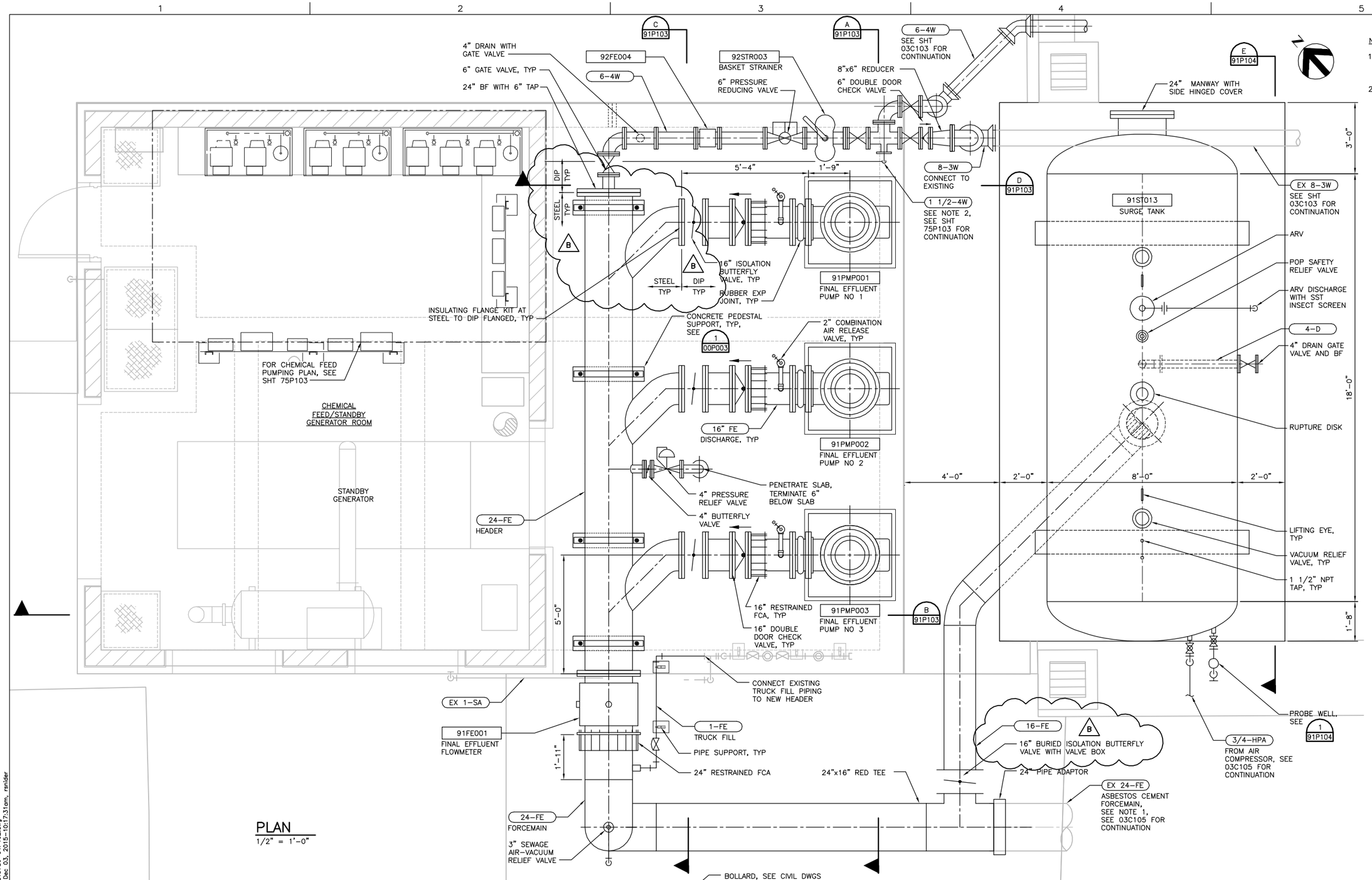

NOTES:

1. CONTRACTOR TO FIELD VERIFY DEPTH AND LOCATION OF EXISTING 24-FE FORCEMAIN.
2. PROVIDE 2" THREADED OPENING IN BLIND FLANGE OF 6"x6"x6"x3" REDUCING CROSS FOR 2" NPT CONNECTION.

PLAN
1/2" = 1'-0"

FILE: 215786-91P102.dwg
DATE: Dec 03, 2015-10:17:31am, ranider

HDR
HDR Engineering, Inc.

ISSUE	DATE	DESCRIPTION
B	12-03-15	ADDENDUM #4
A	JUNE 2015	ISSUED FOR BID

PROJECT MANAGER	C. OLSON
DESIGNED	M.BECK
DESIGNED	
CHECKED	D. HUNT
DRAWN	M. FOYLE
DATE	JUNE 30, 2015
PROJECT NUMBER	215786

REGISTERED PROFESSIONAL ENGINEER MASON W. BECK NO. 73193 EXP. 12/31/16 CIVIL STATE OF CALIFORNIA 06-30-15

CITY OF PINOLE CALIFORNIA 1903

PINOLE/HERCULES WATER POLLUTION CONTROL PLANT UPGRADE CLIENT PN

PROCESS

EXISTING EFFLUENT PUMPING STATION UPPER LEVEL MODIFICATIONS PLAN

0 1" 2"

FILENAME	215786-91P102
SCALE	AS NOTED

SHEET **91P102**

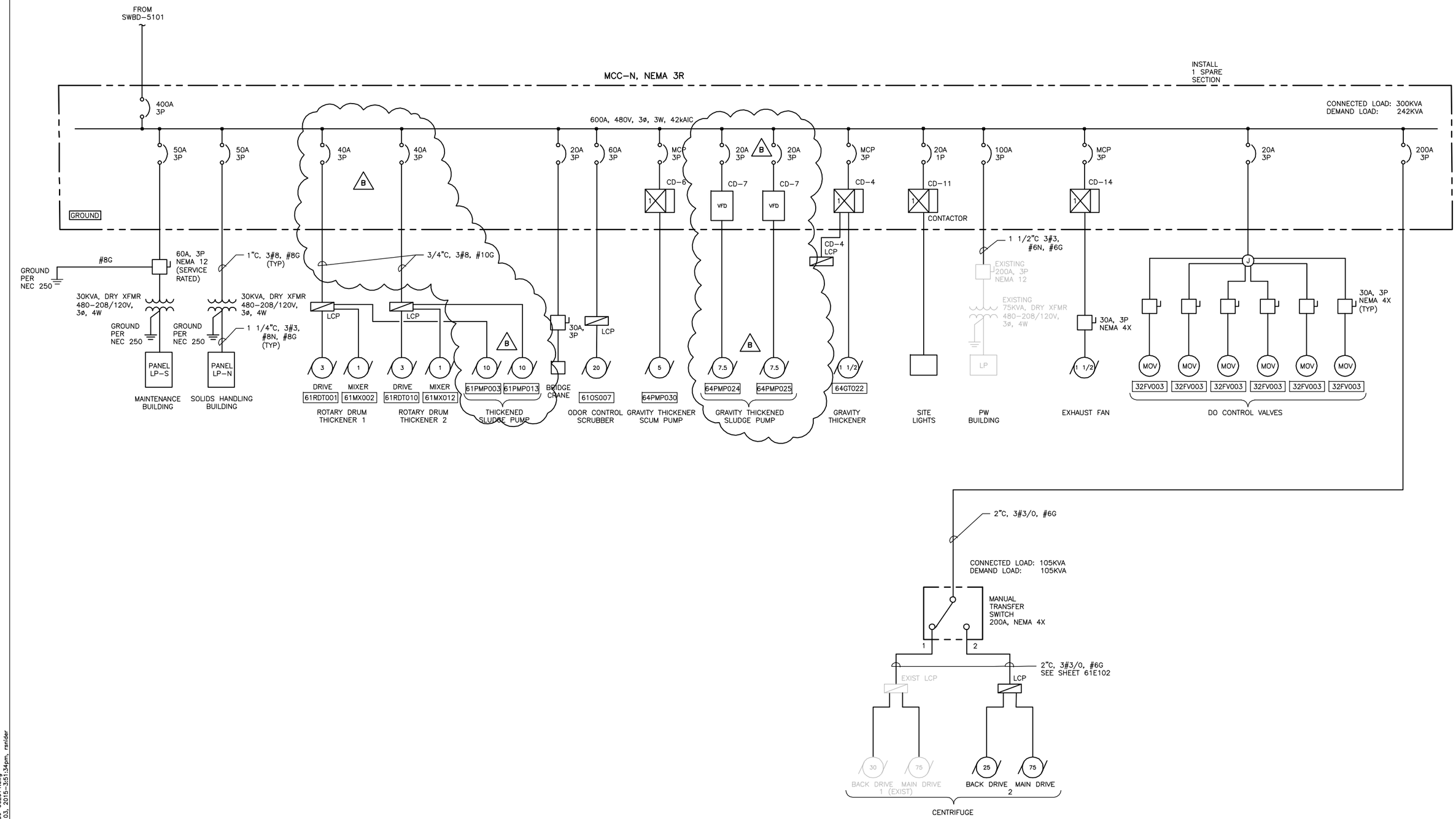

FILE: 215786-00E014.dwg
DATE: Dec 03, 2015-3:51:34pm, rsnider

HDR
HDR Engineering, Inc.

ISSUE	DATE	DESCRIPTION
B	12-03-15	ADDENDUM #4
A	JUNE 2015	ISSUED FOR BID

PROJECT MANAGER	C. OLSON
DESIGNED	W.F. ETTLICH
DESIGNED	
CHECKED	L.D. SMITHEY
DRAWN	E.G. SESPENE
DATE	JUNE 30, 2015
PROJECT NUMBER	215786

REGISTERED PROFESSIONAL ENGINEER WILLIAM F. ETTLICH NO. 07625 EXP. 09/30/16 ELECTRICAL STATE OF CALIFORNIA 12-03-15

CITY OF PINOLE CALIFORNIA 1903

PINOLE/HERCULES
WATER POLLUTION
CONTROL PLANT UPGRADE
CLIENT PN

ELECTRICAL

SINGLE LINE DIAGRAM

0 1" 2"

FILENAME	215786-00E014
SCALE	NONE

SHEET **00E014**

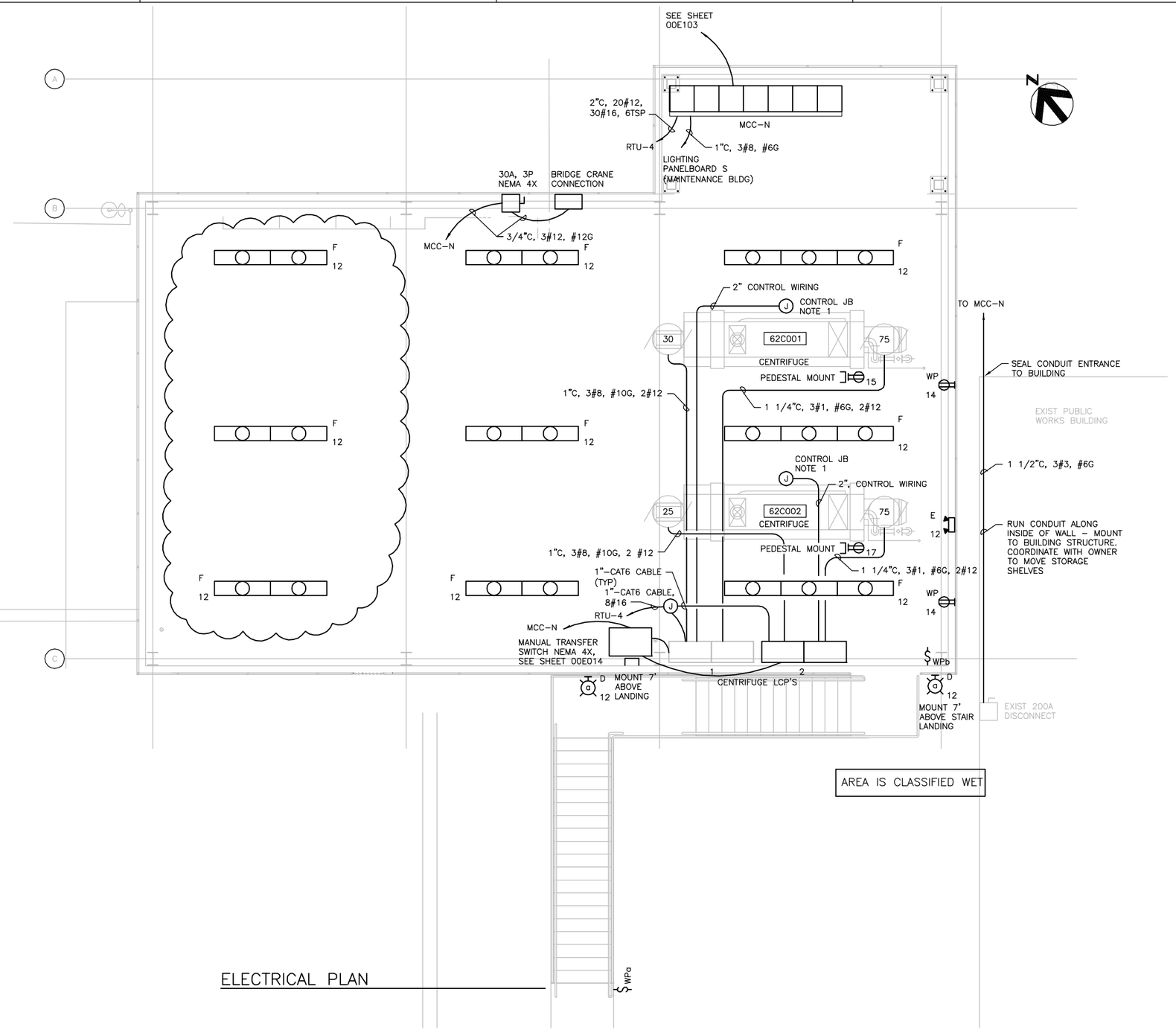

NOTES:

1. WIRE CENTRIFUGE CONTROLS TO JUNCTION BOX AND RUN CONTROL CONDUCTORS IN CONDUIT TO RESPECTIVE LCP.
2. MOUNT LIGHT FIXTURES IN DEWATERING AREA UNDER CEILING ABOVE BRIDGE CRANE.

ELECTRICAL PLAN

FILE: 215786-61E103.dwg
DATE: Dec 03, 2015-9:17:31am, ranider

HDR Engineering, Inc.

ISSUE	DATE	DESCRIPTION
B	12-03-15	ADDENDUM #4
A	JUNE 2015	ISSUED FOR BID

PROJECT MANAGER	C. OLSON
DESIGNED	W.F. ETTLICH
DESIGNED	
CHECKED	L.D. SMITHEY
DRAWN	E.G. SESPENE
DATE	JUNE 30, 2015
PROJECT NUMBER	215786

REGISTERED PROFESSIONAL ENGINEER WILLIAM F. ETTLICH NO. 07625 EXP. 09/30/16 ELECTRICAL STATE OF CALIFORNIA 12-03-15

CITY OF PINOLE CALIFORNIA 1903

PINOLE/HERCULES WATER POLLUTION CONTROL PLANT UPGRADE CLIENT PN

ELECTRICAL

SOLIDS HANDLING BUILDING SECOND FLOOR ELECTRICAL PLAN

0 1" 2"

FILENAME	215786-61E103
SCALE	1/4"=1'-0"

SHEET **61E103**