# CITY OF PINOLE
# PUBLIC WORKS

PINOLE CONTRA COSTA COUNTY CALIFORNIA

## PLANS FOR
# PINOLE/HERCULES
# WATER POLLUTION CONTROL PLANT UPGRADES

## SEPTEMBER 30, 2015
## ISSUED FOR BID

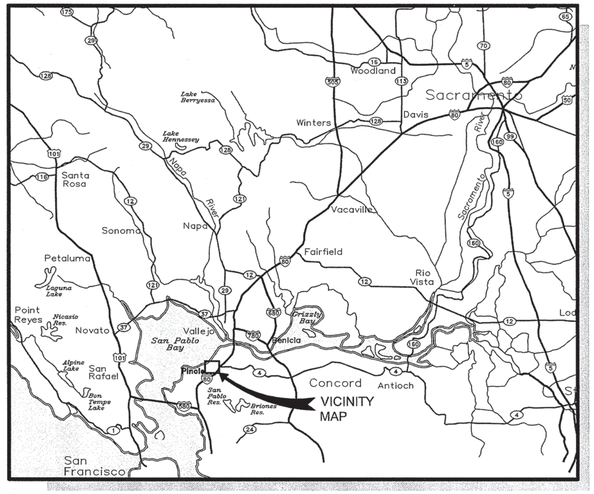


**LOCATION MAP**

APPROVED FOR BIDDING: _____ 9/1/2015

DEAN ALLISON
CITY OF PINOLE DIRECTOR OF PUBLIC WORKS — DATE

PREPARED BY: _____ 9/30/15

CRAIG OLSON, P.E.
HDR PROJECT MANAGER — DATE

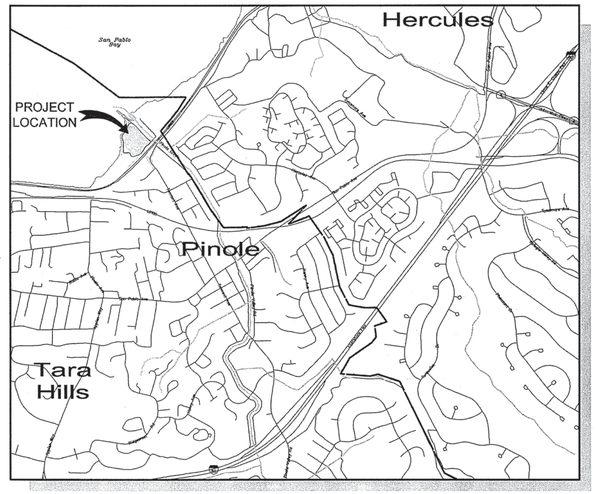


**VICINITY MAP**

HDR Engineering, Inc.

| ISSUE | DATE | DESCRIPTION |
|---|---|---|
| A | JUNE 2015 | ISSUED FOR BID |

| | |
|---|---|
| PROJECT MANAGER | C. OLSON |
| | |
| DESIGNED | R. NATOLI |
| DESIGNED | |
| CHECKED | C. OLSON |
| DRAWN | B. DOWN |
| DATE | JUNE 30, 2015 |
| | |
| PROJECT NUMBER | 215786 |

REGISTERED PROFESSIONAL ENGINEER — CRAIG A. OLSON — NO. 39819 EXP. 12/31/15 — CIVIL — STATE OF CALIFORNIA — 06/30/15

CITY OF PINOLE CALIFORNIA 1903

PINOLE/HERCULES
WATER POLLUTION
CONTROL PLANT UPGRADE
CLIENT PN

**GENERAL**

**TITLE SHEET, LOCATION AND VICINITY MAPS**

0 1" 2"

| | |
|---|---|
| FILENAME | 215786-00G001 |
| SCALE | NONE |

SHEET **00G001**

FILE: 215786-000001.dwg
DATE: Aug. 31, 2015-1:43:03pm, rendier

## GENERAL

| | | |
|---|---|---|
| 1. | 00G001 | TITLE SHEET, LOCATION AND VICINITY MAPS |
| 2. | 00G002 | SHEET INDEX |
| 3. | 00G003 | ABBREVIATIONS |
| 4. | 00G004 | LEGEND AND SYMBOLS |
| 5. | 00G005 | DESIGNATION SYSTEM |
| 6. | 00G006 | PIPING SYSTEMS SCHEDULE AND ABBREVIATIONS |
| 7. | 00G007 | OVERALL SITE KEY PLAN |
| 8. | 00G008 | CONTRACTOR AND TRUCK SITE ACCESS |
| 9. | 00G009 | CONTRACTOR STAGING AREA |
| 10. | 00G010 | PROCESS FLOW SCHEMATIC |
| 11. | 00G011 | DESIGN CRITERIA |
| 12. | 00G012 | HYDRAULIC PROFILE 1 |
| 13. | 00G013 | HYDRAULIC PROFILE 2 |
| 14. | 00G014 | CONSTRUCTION SEQUENCING STAGE I |
| 15. | 00G015 | CONSTRUCTION SEQUENCING STAGE II |
| 16. | 00G016 | CONSTRUCTION SEQUENCING STAGE III |

## DEMOLITION

| | | |
|---|---|---|
| 17. | 00D001 | GENERAL NOTES |
| 18. | 00D002 | OVERALL SITE KEY PLAN |
| 19. | 02D101 | PAVING AND GRADING PLAN NORTH PLANT |
| 20. | 02D102 | PAVING AND GRADING PLAN SOUTH PLANT |
| 21. | 03D101 | YARD PIPING PLAN AREA 1 |
| 22. | 03D102 | YARD PIPING PLAN AREA 2 |
| 23. | 03D103 | YARD PIPING PLAN AREA 3 |
| 24. | 03D104 | YARD PIPING PLAN AREA 4 |
| 25. | 12D101 | HEADWORKS LOWER AND INTERMEDIATE LEVEL PLANS |
| 26. | 12D102 | HEADWORKS UPPER LEVEL PLAN |
| 27. | 12D103 | HEADWORKS SECTIONS |
| 28. | 12D104 | MAINTENANCE BUILDING PLAN, PHOTO AND DETAILS |
| 29. | 21D101 | PRIMARY CLARIFIERS SITE KEY PLAN |
| 30. | 21D102 | PRIMARY CLARIFIER NO 1 PLAN AND SECTION |
| 31. | 21D103 | PRIMARY CLARIFIER NO 2 PLAN AND SECTION |
| 32. | 21D104 | PRIMARY CLARIFIER NO 3 PLAN |
| 33. | 21D105 | PRIMARY CLARIFIER NO 3 SECTIONS |
| 34. | 22D101 | PRIMARY FLOW DISTRIBUTION PLAN |
| 35. | 22D102 | PRIMARY FLOW DISTRIBUTION SECTIONS |
| 36. | 23D101 | PRIMARY CLARIFIER NO 3 SCUM & SLUDGE PUMP STATION PLAN AND SECTIONS |
| 37. | 31D101 | AERATION BASINS PLAN AT ELEVATION 100.00 |
| 38. | 31D102 | AERATION BASINS PLAN AT ELEVATION 112.0 |
| 39. | 31D103 | AERATION BASINS PLAN AT ELEVATION 115.00 |
| 40. | 31D104 | AERATION BASINS SECTIONS |
| 41. | 31D105 | AERATION BASINS PHOTOGRAPHS |
| 42. | 32D101 | SECONDARY CLARIFIER SPLITTER BOX PLAN AND SECTIONS |
| 43. | 41D101 | SECONDARY CLARIFIER NO 1 AND NO 2 PLAN |
| 44. | 41D102 | SECONDARY CLARIFIER NO 1 AND NO 2 TYPICAL SECTION |
| 45. | 42D101 | RAS/WAS PUMP STATIONS NO 1 AND 2 DEMOLITION PLAN |
| 46. | 42D102 | RAS/WAS PUMP STATIONS NO 1 AND 2 DEMOLITION SECTIONS |
| 47. | 51D101 | BLOWER BUILDING PLAN |
| 48. | 51D102 | BLOWER BUILDING SECTIONS |
| 49. | 61D101 | SOLIDS HANDLING AREA PLAN |
| 50. | 61D102 | SOLIDS HANDLING AREA SECTIONS |
| 51. | 66D101 | POLYMER BUILDING PLAN |
| 52. | 66D102 | POLYMER BUILDING SECTIONS |
| 53. | 71D101 | CHLORINE CONTACT BASIN PLAN AND SECTIONS |
| 54. | 75D101 | BISULFITE STORAGE AREA PLAN AND PHOTOGRAPHS |
| 55. | 85D101 | DIGESTER GAS BURNER PLAN, PHOTO AND SECTIONS |
| 56. | 91D101 | EFFLUENT PUMP STATION UPPER LEVEL PLAN |
| 57. | 91D102 | EFFLUENT PUMP STATION SECTIONS |
| 58. | 91D103 | EFFLUENT PUMP STATION PHOTOS AND NOTES |

## CIVIL

| | | |
|---|---|---|
| 59. | 00C001 | CIVIL DETAILS 1 |
| 60. | 00C002 | CIVIL DETAILS 2 |
| 61. | 00C003 | CIVIL DETAILS 3 |
| 62. | 00C004 | CIVIL DETAILS 4 |
| 63. | 00C005 | CIVIL DETAILS 5 |
| 64. | 00C006 | CIVIL DETAILS 6 |
| 65. | 00C007 | CIVIL DETAILS 7 |
| 66. | 02C101 | GRADING AND PAVING PLAN AREA 1 |
| 67. | 02C102 | GRADING AND PAVING PLAN AREA 2 |
| 68. | 02C103 | GRADING AND PAVING PLAN AREA 3 |
| 69. | 02C104 | GRADING AND PAVING PLAN AREA 4 |
| 70. | 02C105 | GRADING AND PAVING PLAN AREA 5 |
| 71. | 02C106 | GRADING AND PAVING PLAN AREA 6 |
| 72. | 02C107 | RETAINING WALL PROFILE AND DETAIL |
| 73. | 03C101 | YARD PIPING PLAN AREA 1 |
| 74. | 03C102 | YARD PIPING PLAN AREA 2 |
| 75. | 03C103 | YARD PIPING PLAN AREA 3 |
| 76. | 03C104 | YARD PIPING PLAN AREA 4 |
| 77. | 03C105 | YARD PIPING PLAN AREA 5 |
| 78. | 03C106 | YARD PIPING PLAN AREA 6 |
| 79. | 03C107 | YARD PIPING PROFILES 1 |
| 80. | 03C108 | YARD PIPING PROFILES 2 |
| 81. | 03C109 | YARD PIPING PROFILES 3 |
| 82. | 03C110 | YARD PIPING PROFILES 4 |
| 83. | 06C101 | OUTFALL PIPELINE MODIFICATIONS |

## LANDSCAPING

| | | |
|---|---|---|
| 84. | 00L001 | SITE PLAN – WALKING PATH LAYOUT |
| 85. | 00L002 | MISCELLANEOUS DETAILS 1 |
| 86. | 00L003 | MISCELLANEOUS DETAILS 2 |

## ARCHITECTURAL

| | | |
|---|---|---|
| 87. | 00A103 | CODE REVIEW PLAN SOLIDS HANDLING BUILDING FIRST FLOOR |
| 88. | 00A104 | CODE REVIEW PLAN SOLIDS HANDLING BUILDING SECOND FLOOR |
| 89. | 00A106 | DOOR AND LOUVER SCHEDULE |
| 90. | 01A101 | PUBLIC WORKS BUILDING ELEVATIONS |
| 91. | 14A101 | ELECTRICAL BUILDING FLOOR AND ROOF PLANS |
| 92. | 14A102 | ELECTRICAL BUILDING ELEVATIONS |
| 93. | 14A103 | ELECTRICAL BUILDING SECTIONS |
| 94. | 61A101 | SOLIDS HANDLING BUILDING FIRST FLOOR PLAN |
| 95. | 61A102 | SOLIDS HANDLING BUILDING SECOND FLOOR PLAN |
| 96. | 61A103 | SOLIDS HANDLING BUILDING ROOF PLAN |
| 97. | 61A104 | SOLIDS HANDLING BUILDING ELEVATIONS |
| 98. | 66A101 | MAINTENANCE SHOP FIRST FLOOR AND ROOF PLANS |
| 99. | 66A102 | MAINTENANCE SHOP ROOF SECTIONS |

## STRUCTURAL

| | | |
|---|---|---|
| 100. | 00S00 | DESIGNATION KEY PLAN |
| 101. | 00S01 | GENERAL STRUCTURAL NOTES 1 |
| 102. | 00S02 | GENERAL STRUCTURAL NOTES 2 |
| 103. | 00S03 | SPECIAL INSPECTIONS 1 |
| 104. | 00S04 | SPECIAL INSPECTIONS 2 |
| 105. | 00S05 | TYPICAL CONCRETE DETAILS 1 |
| 106. | 00S06 | TYPICAL CONCRETE DETAILS 2 |
| 107. | 00S07 | TYPICAL CONCRETE DETAILS 3 |
| 108. | 00S08 | TYPICAL CONCRETE DETAILS 4 |
| 109. | 00S09 | TYPICAL CONCRETE REINFORCING DETAILS |
| 110. | 00S10 | TYPICAL PILE DETAILS AND SCHEDULE |
| 111. | 00S11 | GRADE BEAM AND CONCRETE WALL SCHEDULES AND DETAILS |
| 112. | 00S12 | TYPICAL CONCRETE BEAM/SLAB DETAILS AND SCHEDULE |
| 113. | 00S13 | TYPICAL MASONRY DETAILS |
| 114. | 00S14 | TYPICAL STEEL DETAILS 1 |
| 115. | 00S15 | TYPICAL STEEL DETAILS 2 |
| 116. | 00S16 | TYPICAL STEEL DETAILS 3 |
| 117. | 00S17 | TYPICAL METAL DECK DETAILS |
| 118. | 00S18 | TYPICAL GRATING DETAILS |
| 119. | 00S19 | TYPICAL RAILING DETAILS 1 |
| 120. | 00S20 | TYPICAL RAILING DETAILS 2 |
| 121. | 01S101 | PUBLIC WORKS BUILDING FOUNDATION PLAN AND DETAILS |
| 122. | 12S101 | HEADWORKS FOUNDATION PLAN |
| 123. | 12S102 | HEADWORKS INTERMEDIATE PLAN |
| 124. | 12S103 | HEADWORKS TOP PLAN |
| 125. | 12S104 | HEADWORKS MONORAIL FRAMING PLAN AND SECTIONS |
| 126. | 12S105 | HEADWORKS SECTIONS 1 |
| 127. | 12S106 | HEADWORKS SECTIONS 2 |
| 128. | 12S107 | HEADWORKS SECTIONS 3 |
| 129. | 12S108 | HEADWORKS SECTIONS AND DETAILS |
| 130. | 13S101 | GRIT REMOVAL PILE LAYOUT PLAN |
| 131. | 13S102 | GRIT REMOVAL FOUNDATION PLAN |
| 132. | 13S103 | GRIT REMOVAL INTERMEDIATE PLAN AT ELEVATION 114.50' |
| 133. | 13S104 | GRIT REMOVAL INTERMEDIATE PLAN AT ELEVATION 121.00' |
| 134. | 13S105 | GRIT REMOVAL TOP PLAN |
| 135. | 13S106 | GRIT REMOVAL SECTIONS 1 |
| 136. | 13S107 | GRIT REMOVAL SECTIONS 2 |
| 137. | 13S108 | GRIT REMOVAL SECTIONS 3 |
| 138. | 13S109 | GRIT REMOVAL SECTIONS 4 |
| 139. | 13S110 | GRIT REMOVAL SECTIONS 5 |
| 140. | 14S101 | ELECTRICAL BUILDING AND GENERATOR PILE LAYOUT PLAN |
| 141. | 14S102 | ELECTRICAL BUILDING AND GENERATOR FOUNDATION PLAN |
| 142. | 14S103 | ELECTRICAL BUILDING ROOF FRAMING PLAN |
| 143. | 14S104 | ELECTRICAL BUILDING STRUCTURAL ELEVATIONS |
| 144. | 14S105 | ELECTRICAL BUILDING AND GENERATOR SECTIONS 1 |
| 145. | 14S106 | ELECTRICAL BUILDING AND GENERATOR SECTIONS 2 |
| 146. | 14S107 | ELECTRICAL BUILDING DETAILS |
| 147. | 15S101 | HEADWORKS ODOR CONTROL PAD PLAN AND SECTION |
| 148. | 21S101 | PRIMARY CLARIFIER NO 3 FOUNDATION PLAN |
| 149. | 21S102 | PRIMARY CLARIFIER NO 3 TOP PLAN |
| 150. | 21S103 | PRIMARY CLARIFIER NO 3 SECTION |
| 151. | 21S104 | PRIMARY CLARIFIER NO 3 ENLARGED PLAN AND DETAILS |
| 152. | 21S105 | PRIMARY CLARIFIER NO 3 DETAILS |
| 153. | 31S101 | AERATION BASINS EXPANSION FOUNDATION PLAN |
| 154. | 31S102 | AERATION BASINS EXPANSION PLAN AT 109.5 |
| 155. | 31S103 | AERATION BASINS EXPANSION TOP PLAN |
| 156. | 31S104 | AERATION BASINS EXPANSION SECTIONS 1 |
| 157. | 31S105 | AERATION BASINS EXPANSION SECTIONS 2 |
| 158. | 31S106 | AERATION BASINS EXPANSION SECTIONS 3 |
| 159. | 31S107 | AERATION BASINS EXPANSION SECTIONS 4 |
| 160. | 31S108 | AERATION BASINS EXPANSION SECTIONS AND DETAILS |
| 161. | 31S109 | AERATION BASINS EXPANSION SECTIONS AND DETAILS |
| 162. | 31S110 | AERATION BASINS EXPANSION SECTIONS AND DETAILS |
| 163. | 31S111 | AERATION BASINS EXPANSION SECTIONS AND DETAILS |
| 164. | 31S112 | AERATION BASINS EXPANSION ENLARGED PLANS, SECTIONS AND DETAILS |
| 165. | 32S101 | PRIMARY EFFLUENT AND MIXED LIQUOR FLOW SPLIT BOX PLANS |
| 166. | 32S102 | PRIMARY EFFLUENT AND MIXED LIQUOR FLOW SPLIT BOX SECTIONS 1 |
| 167. | 32S103 | PRIMARY EFFLUENT AND MIXED LIQUOR FLOW SPLIT BOX SECTIONS 2 |
| 168. | 32S104 | PRIMARY EFFLUENT AND MIXED LIQUOR FLOW SPLIT BOX SECTIONS 3 |
| 169. | 32S105 | PRIMARY EFFLUENT AND MIXED LIQUOR FLOW SPLIT BOX SECTIONS 4 |
| 170. | 32S106 | PRIMARY EFFLUENT AND MIXED LIQUOR FLOW SPLIT BOX SECTIONS AND DETAILS |
| 171. | 41S101 | SECONDARY CLARIFIERS NO 1 AND NO 2 FOUNDATION PLAN |
| 172. | 41S102 | SECONDARY CLARIFIERS NO 1 AND NO 2 TOP PLAN |
| 173. | 41S103 | SECONDARY CLARIFIERS NO 1 AND NO 2 SECTION |
| 174. | 41S104 | SECONDARY CLARIFIERS NO 1 AND NO 2 ENLARGED PLAN AND SECTIONS |
| 175. | 41S105 | SECONDARY CLARIFIER NO 1 AND NO 2 SECTIONS |
| 176. | 42S101 | EXISTING RAS/WAS PUMPING STATIONS ELECTRICAL PADS PLAN AND SECTION |
| 177. | 51S101 | BLOWER BUILDING FLOOR PLAN |
| 178. | 51S102 | BLOWER BUILDING SECTIONS |
| 179. | 51S103 | BLOWER BUILDING DETAILS |
| 180. | 61S101 | SOLIDS HANDLING BUILDING PILE LAYOUT PLAN |
| 181. | 61S102 | SOLIDS HANDLING BUILDING FOUNDATION PLAN |
| 182. | 61S103 | SOLIDS HANDLING BUILDING SECOND FLOOR FRAMING PLAN |
| 183. | 61S104 | SOLIDS HANDLING BUILDING CRANE/ROOF FRAMING PLAN |
| 184. | 61S105 | SOLIDS HANDLING BUILDING STRUCTURAL ELEVATIONS |
| 185. | 61S106 | SOLIDS HANDLING BUILDING SECTION A |
| 186. | 61S107 | SOLIDS HANDLING BUILDING SECTION C |
| 187. | 61S108 | SOLIDS HANDLING BUILDING DETAILS – I |
| 188. | 61S109 | SOLIDS HANDLING BUILDING DETAILS – II |
| 189. | 61S110 | SOLIDS HANDLING BUILDING DETAILS – III |
| 190. | 61S111 | SOLIDS HANDLING BUILDING SECTIONS AND DETAILS |
| 191. | 63S101 | ODOR CONTROL PAD SECTION |
| 192. | 64S101 | GRAVITY SLUDGE THICKENER FOUNDATION PLAN |
| 193. | 64S102 | GRAVITY SLUDGE THICKENER TOP PLAN |
| 194. | 64S103 | GRAVITY SLUDGE THICKENER SECTION |
| 195. | 64S104 | GRAVITY SLUDGE THICKENER ENLARGED PLANS, SECTIONS AND DETAILS |
| 196. | 66S101 | MAINTENANCE SHOP FLOOR AND ROOF PLANS |
| 197. | 66S102 | MAINTENANCE BUILDING SECTIONS AND DETAILS |
| 198. | 71S101 | CHLORINE CONTACT BASIN FOUNDATION PLAN |
| 199. | 71S102 | CHLORINE CONTACT BASIN TOP PLAN |
| 200. | 71S103 | CHLORINE CONTACT BASIN SECTIONS 1 |
| 201. | 71S104 | CHLORINE CONTACT BASIN SECTIONS 2 |
| 202. | 75S101 | HYPOCHLORITE/BISULFITE CHEMICAL STORAGE AND FEED PILE LAYOUT PLAN |
| 203. | 75S102 | HYPOCHLORITE/BISULFITE CHEMICAL STORAGE AND FEED FLOOR PLAN |
| 204. | 75S103 | HYPOCHLORITE/BISULFITE CHEMICAL STORAGE AND FEED ELEVATIONS |
| 205. | 75S104 | HYPOCHLORITE/BISULFITE SECTIONS |
| 206. | 76S101 | FERRIC CHLORIDE CHEMICAL STORAGE AND FEED PLANS |
| 207. | 76S102 | FERRIC CHLORIDE CHEMICAL STORAGE AND FEED SECTIONS |
| 208. | 77S101 | SODIUM HYDROXIDE CHEMICAL STORAGE AND FEED PLAN |
| 209. | 77S102 | SODIUM HYDROXIDE CHEMICAL STORAGE AND FEED SECTIONS |
| 210. | 85S101 | DIGESTER GAS BURNER PLAN AND SECTIONS |
| 211. | 91S101 | EFFLUENT PUMPING STATION AND SURGE TANK LOWER LEVEL MODIFICATIONS PLAN |
| 212. | 91S102 | EFFLUENT PUMPING STATION AND SURGE TANK UPPER LEVEL MODIFICATIONS PLAN |
| 213. | 91S103 | EFFLUENT PUMPING STATION AND SURGE TANK SECTIONS AND DETAILS |
| 214. | 91S104 | EFFLUENT PUMP STATION SURGE TANK SECTION |

## PROCESS

| | | |
|---|---|---|
| 215. | 00P001 | STANDARD DETAILS 1 |
| 216. | 00P002 | STANDARD DETAILS 2 |
| 217. | 00P003 | STANDARD DETAILS 3 |
| 218. | 00P004 | STANDARD DETAILS 4 |
| 219. | 00P005 | STANDARD DETAILS 5 |
| 220. | 00P006 | STANDARD DETAILS 6 |
| 221. | 00P007 | STANDARD DETAILS 7 |
| 222. | 11P101 | INFLUENT SEWER FLUMES FLOW MEASUREMENT SECTIONS & DETAILS |
| 223. | 12P101 | HEADWORKS LOWER PLAN |
| 224. | 12P102 | HEADWORKS TOP DECK PLAN |
| 225. | 12P103 | HEADWORKS SECTION 1 |
| 226. | 12P104 | HEADWORKS SECTION 2 |
| 227. | 12P105 | HEADWORKS SECTIONS 3 |
| 228. | 12P106 | HEADWORKS SECTION 4 |
| 229. | 13P101 | GRIT BASIN LOWER PLAN |
| 230. | 13P102 | GRIT BASIN TOP DECK PLAN |
| 231. | 13P103 | GRIT BASIN SECTION 1 |
| 232. | 13P104 | GRIT BASIN SECTION 2 |
| 233. | 13P105 | GRIT BASIN SECTION 3 |
| 234. | 13P106 | GRIT BASIN SECTIONS 4 |
| 235. | 13P107 | GRIT BASIN SECTIONS 5 |
| 236. | 13P108 | GRIT BASIN SECTIONS AND DETAILS |
| 237. | 15P101 | HEADWORKS ODOR CONTROL FACILITY PLAN AND SECTION |
| 238. | 21P101 | PRIMARY CLARIFIERS KEY PLAN |
| 239. | 21P102 | PRIMARY CLARIFIERS DETAILS 1 |
| 240. | 21P103 | PRIMARY CLARIFIERS DETAILS 2 |
| 241. | 21P111 | EXISTING PRIMARY CLARIFIER NO 1 MODIFICATIONS PLAN AND SECTION |
| 242. | 21P121 | EXISTING PRIMARY CLARIFIER NO 2 MODIFICATIONS PLAN AND SECTION |
| 243. | 21P131 | PRIMARY CLARIFIER NO 3 PLAN |
| 244. | 21P132 | PRIMARY CLARIFIER NO 3 SECTION 1 |
| 245. | 21P133 | PRIMARY CLARIFIER NO 3 SECTION 2 |
| 246. | 21P134 | PRIMARY CLARIFIER NO 3 SECTIONS 3 |
| 247. | 22P101 | EXISTING PRIMARY FLOW DISTRIBUTION MODIFICATIONS PLAN |
| 248. | 22P102 | EXISTING PRIMARY FLOW DISTRIBUTION MODIFICATIONS SECTIONS |
| 249. | 31P101 | EXISTING AERATION BASINS LOWER LOWER LEVEL EXPANSION PLAN |
| 250. | 31P102 | EXISTING AERATION BASINS CHANNEL LEVEL EXPANSION PLAN |
| 251. | 31P103 | EXISTING AERATION BASINS DECK LEVEL EXPANSION PLAN |
| 252. | 31P104 | EXISTING AERATION BASINS EXPANSION SECTIONS |
| 253. | 31P105 | EXISTING AERATION BASINS EXPANSION SECTIONS |
| 254. | 31P106 | EXISTING AERATION BASINS EXPANSION SECTIONS |
| 255. | 31P107 | EXISTING AERATION BASINS EXPANSION SECTIONS |
| 256. | 31P108 | EXISTING AERATION BASINS EXPANSION SECTIONS AND DETAILS |
| 257. | 32P101 | PRIMARY EFFLUENT AND MIXED LIQUOR FLOW SPLIT STRUCTURE SECTIONAL PLAN |
| 258. | 32P102 | PRIMARY EFFLUENT AND MIXED LIQUOR FLOW SPLIT STRUCTURE DECK PLAN |
| 259. | 32P103 | PRIMARY EFFLUENT AND MIXED LIQUOR FLOW SPLIT STRUCTURE SECTIONS |
| 260. | 32P104 | PRIMARY EFFLUENT AND MIXED LIQUOR FLOW SPLIT STRUCTURE SECTIONS |
| 261. | 32P105 | PRIMARY EFFLUENT AND MIXED LIQUOR FLOW SPLIT STRUCTURE SECTIONS |
| 262. | 32P106 | PRIMARY EFFLUENT AND MIXED LIQUOR FLOW SPLIT STRUCTURE SECTIONS |
| 263. | 41P101 | SECONDARY CLARIFIER NO 1 AND NO 2 PLAN |
| 264. | 41P102 | SECONDARY CLARIFIER NO 1 AND NO 2 SECTION AND DETAILS |
| 265. | 41P103 | SECONDARY CLARIFIER NO 1 AND NO 2 SECTION AND DETAILS |
| 266. | 42P101 | EXISTING RAS/WAS PUMPING STATIONS MODIFICATION PLAN |
| 267. | 42P102 | EXISTING RAS/WAS PUMPING STATIONS MODIFICATIONS SECTIONS |
| 268. | 51P101 | EXISTING BLOWER BUILDING MODIFICATIONS PLAN |
| 269. | 51P102 | EXISTING BLOWER BUILDING MODIFICATIONS SECTIONS AND DETAILS |
| 270. | 61P101 | SOLIDS HANDLING BUILDING FLOOR LEVEL PLAN |
| 271. | 61P102 | SOLIDS HANDLING BUILDING ROOF LEVEL PLAN |
| 272. | 61P103 | SOLIDS HANDLING BUILDING SECTIONS I |
| 273. | 61P104 | SOLIDS HANDLING BUILDING SECTIONS II |
| 274. | 63P101 | SOLIDS HANDLING ODOR CONTROL FACILITY PLAN AND SECTION |
| 275. | 64P101 | GRAVITY SLUDGE THICKENER PLAN |
| 276. | 64P102 | GRAVITY SLUDGE THICKENER SECTIONS |
| 277. | 71P101 | CHLORINE CONTACT BASINS BOTTOM PLAN |
| 278. | 71P102 | CHLORINE CONTACT BASINS TOP PLAN |
| 279. | 71P103 | CHLORINE CONTACT BASINS SECTIONS |
| 280. | 71P104 | CHLORINE CONTACT BASINS SECTIONS AND DETAILS |
| 281. | 73P101 | EMERGENCY OUTFALL STRUCTURE MODIFICATIONS |
| 282. | 75P101 | CHEMICAL STORAGE FLOOR PLAN |
| 283. | 75P102 | CHEMICAL STORAGE SECTIONS 1 |
| 284. | 75P103 | CHEMICAL FEED PUMPING AND ANALYZER ROOM PLAN AND ELEVATIONS |
| 285. | 76P101 | FERRIC CHLORIDE CHEMICAL STORAGE AND FEED PLAN |
| 286. | 77P101 | SODIUM HYDROXIDE STORAGE AND FEED PLAN |
| 287. | 85P101 | DIGESTER GAS BURNER PLAN AND SECTIONS |
| 288. | 91P101 | EFFLUENT PUMPING STATION LOWER LEVEL MODIFICATIONS PLAN |
| 289. | 91P102 | EFFLUENT PUMPING STATION UPPER LEVEL MODIFICATIONS PLAN |
| 290. | 91P103 | EFFLUENT PUMPING STATION SECTIONS |
| 291. | 91P104 | SURGE TANK SECTION AND DETAILS |

## MECHANICAL

| | | |
|---|---|---|
| 292. | 00M001 | SCHEDULES AND SEQUENCE OF OPERATIONS |
| 293. | 00M002 | DETAILS 1 |
| 294. | 14M101 | ELECTRICAL BUILDING FLOOR PLAN |
| 295. | 14M102 | ELECTRICAL BUILDING SECTIONS |
| 296. | 61M101 | SOLIDS HANDLING BUILDING LOWER FLOOR PLAN |
| 297. | 61M102 | SOLIDS HANDLING BUILDING UPPER FLOOR PLAN |
| 298. | 66M101 | MAINTENANCE SHOP FLOOR AND ROOF PLAN |
| 299. | 67M101 | CORPORATION YARD BUILDING HVAC MODIFICATIONS |

## ELECTRICAL

| | | |
|---|---|---|
| 300. | 00E001 | SYMBOLS LEGEND |
| 301. | 00E009 | PRIMARY SERVICE SINGLE LINE DIAGRAM |
| 302. | 00E012 | MCC–B SINGLE LINE DIAGRAM |
| 303. | 00E013 | MCC–M SINGLE LINE DIAGRAM |
| 304. | 00E014 | MCC–N SINGLE LINE DIAGRAM |
| 305. | 00E023 | CONTROL DIAGRAMS 1 |
| 306. | 00E024 | CONTROL DIAGRAMS 2 |
| 307. | 00E025 | CONTROL DIAGRAMS 3 |
| 308. | 00E026 | CONTROL DIAGRAMS 4 |
| 309. | 00E030 | ELECTRICAL SCHEDULES |
| 310. | 00E031 | ELECTRICAL SCHEDULES |
| 311. | 00E033 | EQUIPMENT LAYOUT/DETAILS |
| 312. | 00E034 | DETAILS |
| 313. | 00E035 | DETAILS |
| 314. | 00E036 | DETAILS |
| 315. | 00E037 | DETAILS |
| 316. | 00E103 | SITE PLAN NORTH PLANT |
| 317. | 00E104 | SITE PLAN SOUTH PLANT |
| 318. | 00E105 | DUCT BANK SCHEDULES |
| 319. | 00E106 | CONDUCTOR SCHEDULES |
| 320. | 01E101 | PUBLIC WORKS ELECTRICAL PLAN |
| 321. | 12E101 | HEADWORKS ELECTRICAL PLAN |
| 322. | 13E101 | GRIT ELECTRICAL PLAN |
| 323. | 14E101 | ELECTRICAL BLDG/GENERATOR AREA ELECTRICAL PLAN |
| 324. | 21E101 | PRIMARY CLARIFIER 3 ELECTRICAL PLAN |
| 325. | 21E102 | PRIMARY CLARIFIERS NO 1 AND NO 2 ELECTRICAL PLAN |
| 326. | 31E101 | AERATION BASIN DECK LEVEL ELECTRICAL PLAN |
| 327. | 41E101 | SECONDARY CLARIFIERS NO 1 AND NO 2 ELECTRICAL PLAN |
| 328. | 41E102 | EXISTING SECONDARY CLARIFIERS NO 3, 4 AND 5 ELECTRICAL PLAN |
| 329. | 42E101 | EXISTING RAS/WAS PUMPING STATIONS ELECTRICAL PLAN |
| 330. | 51E101 | EXISTING BLOWER BUILDING POWER PLAN |
| 331. | 61E101 | SOLIDS HANDLING BUILDING GROUND FLOOR ELECTRICAL PLAN |
| 332. | 61E102 | SOLIDS HANDLING BUILDING GROUND FLOOR LIGHTING PLAN |
| 333. | 61E103 | SOLIDS HANDLING BUILDING SECOND FLOOR ELECTRICAL PLAN |
| 334. | 61E104 | GRAVITY SLUDGE THICKENER ELECTRICAL PLAN |
| 335. | 66E101 | MAINTENANCE BUILDING ELECTRICAL PLAN |
| 336. | 71E101 | CHLORINE CONTACT BASIN ELECTRICAL PLAN |
| 337. | 75E101 | CHEMICAL STORAGE ELECTRICAL PLAN 1 |
| 338. | 85E101 | DIGESTER GAS BURNER ELECTRICAL PLAN |
| 339. | 91E101 | EFFLUENT PUMP STATION ELECTRICAL PLAN |

## INSTRUMENTATION

| | | |
|---|---|---|
| 340. | 00I001 | P&ID SYMBOLS LEGEND AND ABBREVIATIONS |
| 341. | 00I006 | P&ID SCADA BLOCK DIAGRAM |
| 342. | 11I101 | P&ID RAW SEWAGE FLOW |
| 343. | 12I101 | P&ID RAW SEWAGE SCREENING |
| 344. | 12I102 | P&ID INFLUENT PUMP STATION |
| 345. | 13I101 | P&ID GRIT REMOVAL |
| 346. | 21I101 | P&ID PRIMARY CLARIFICATION |
| 347. | 23I101 | P&ID PRIMARY SCUM PUMPING |
| 348. | 25I101 | P&ID PRIMARY SLUDGE PUMPING |
| 349. | 31I101 | P&ID AERATION BASIN 1 |
| 350. | 31I102 | P&ID AERATION BASIN 2 |
| 351. | 32I101 | P&ID PRIMARY EFFLUENT AND RAS FLOW SPLIT |
| 352. | 41I101 | P&ID SECONDARY CLARIFICATION 1 |
| 353. | 41I102 | P&ID SECONDARY CLARIFICATION 2 |
| 354. | 42I101 | P&ID RAS PUMPING STRUCTURE 1 |
| 355. | 42I102 | P&ID RAS PUMPING STRUCTURE 1 |
| 356. | 42I103 | P&ID RAS PUMPING STRUCTURE 2 |
| 357. | 43I101 | P&ID WAS PUMPING |
| 358. | 51I101 | P&ID AERATION BLOWERS |
| 359. | 61I101 | P&ID THICKENER 1 |
| 360. | 61I102 | P&ID THICKENER 2 |
| 361. | 61I103 | P&ID SOLIDS BLENDING/THICKENING |
| 362. | 62I101 | P&ID SOLIDS DEWATERING |
| 363. | 65I101 | P&ID SOLIDS POLYMER |
| 364. | 71I101 | P&ID CHLORINE CONTACT |
| 365. | 75I101 | P&ID SODIUM HYPOCHLORITE STORAGE AND FEED SYSTEM |
| 366. | 75I102 | P&ID SODIUM BISULFITE STORAGE AND FEED SYSTEM |
| 367. | 76I101 | P&ID FERRIC CHLORIDE STORAGE AND FEED SYSTEM |
| 368. | 77I101 | P&ID SODIUM HYDROXIDE STORAGE AND FEED SYSTEM |
| 369. | 85I101 | P&ID DIGESTER GAS FLARE SYSTEM |
| 370. | 91I101 | P&ID EFFLUENT PUMPING |

FILE: 215786-000002.dwg
DATE: Oct 07, 2015 - 4:25:50pm, rsnider

HDR Engineering, Inc.

| ISSUE | DATE | DESCRIPTION |
|---|---|---|
| A | JUNE 2015 | ISSUED FOR BID |

| | |
|---|---|
| PROJECT MANAGER | C. OLSON |
| DESIGNED | R. NATOLI |
| DESIGNED | |
| CHECKED | C. OLSON |
| DRAWN | B. DOWN |
| DATE | JUNE 30, 2015 |
| PROJECT NUMBER | ~~215786~~ |

REGISTERED PROFESSIONAL ENGINEER
CRAIG A. OLSON
NO. 39819
EXP. 12/31/15
CIVIL
STATE OF CALIFORNIA
09-30-15

CITY OF PINOLE CALIFORNIA 1903

PINOLE/HERCULES
WATER POLLUTION
CONTROL PLANT UPGRADE
CLIENT PN

**GENERAL**

**SHEET INDEX**

0 1" 2"

| | |
|---|---|
| FILENAME | 215786-00G002 |
| SCALE | NONE |

SHEET **00G002**

| | |
|---|---|
| A/C | AIR CONDITIONING |
| A/E | ARCHITECT/ENGINEER |
| A | AMP or ARCHITECTURAL (DWG DISCIPLINE) |
| AB | ANCHOR BOLT |
| ABC | AGGREGATE BASE COURSE |
| ABAN | ABANDON |
| AC | ALTERNATING CURRENT |
| ACK | ACKNOWLEDGE |
| ACP | ACOUSTIC CEILING PANEL or ASPHALTIC CONCRETE PAVEMENT |
| ACST | ACOUSTIC |
| AD | AREA DRAIN or ADDENDUM |
| ADDL | ADDITIONAL |
| ADH | ADHESIVE |
| ADJ | ADJUSTABLE or ADJACENT |
| AF | AMP FRAME or AMP FUSE |
| AFF | ABOVE FINISH FLOOR |
| AFG | ABOVE FINISH GRADE |
| AGGR | AGGREGATE |
| AI | AREA INLET |
| AIC | AMPS INTERRUPTING CAPACITY |
| ALIG | ALIGNMENT |
| ALUM | ALUMINUM |
| ALT | ALTERNATE or ALTITUDE |
| AM | ACOUSTICAL MATERIAL |
| AMB | AMBIENT |
| ANC | ANCHOR |
| AP | ACCESS PANEL |
| APRX | APPROXIMATE |
| APVD | APPROVED |
| ARCH | ARCHITECTURAL |
| ASSY | ASSEMBLY |
| AT | AMP TRIP |
| ATC | ACOUSTICAL TILE CEILING |
| ATM | ATMOSPHERE |
| AUTO | AUTOMATIC |
| AUX | AUXILIARY |
| AVE | AVENUE |
| AVG | AVERAGE |
| AWG | AMERICAN WIRE GAGE |
| AWT | ACOUSTICAL WALL TILE |
| B TO B | BACK TO BACK |
| BAL | BALANCE |
| BBD | BULLETIN BOARD |
| BC | BASE CABINET or BOTTOM CHORD or BOLT CENTER or BOLT CIRCLE |
| BD | BOARD |
| BE | BOTH ENDS or BELL END |
| BF | BOTH FACES or BOTTOM FACE or BLIND FLANGE or BOARD FEET |
| BITUM | BITUMINOUS |
| BKG | BACKING |
| BL | BASE LINE |
| BLDG | BUILDING |
| BLK | BLOCK |
| BLKG | BLOCKING |
| BM | BENCHMARK or BEAM |
| BOC | BACK OF CURB |
| BOD | BOTTOM OF DUCT |
| BOG | BOTTOM OF GRILLE |
| BOL | BOTTOM OF LOUVER |
| BOP | BOTTOM OF PIPE |
| BOR | BOTTOM OF REGISTER |
| BOT | BOTTOM |
| BOU | BOTTOM OF UNIT |
| BP | BASE PLATE |
| BRG | BEARING |
| BRGP | BEARING PLATE |
| BRKT | BRACKET |
| BS | BOTH SIDES |
| BTU | BRITISH THERMAL UNIT |
| BTW | BETWEEN |
| BTWLD | BUTT WELD |
| BU | BELL UP or BUILT UP |
| BUR | BUILT-UP ROOFING |
| BW | BOTH WAYS |
| BYP | BYPASS |
| C TO C | CENTER TO CENTER |
| C&G | CURB & GUTTER |
| C | CHANNEL (SHAPE) or CENTIGRADE or CONDUIT or CIVIL (DRAWING DISCIPLINE) |
| CAB | CABINET |
| CAP | CAPACITY |
| CAT | CATALOG |
| CAV | CAVITY |
| CB | CATCH BASIN |
| CCB | CONCRETE BLOCK |
| CCW | COUNTER CLOCKWISE |
| CDF | CONTROLLED DENSITY FILL |
| CE | CONCRETE EDGE |
| CER | CERAMIC |
| CF | CUBIC FEET (FOOT) |
| CFL | COUNTER FLASHING |
| CHFR | CHAMFER |
| CHBD | CHALKBOARD |
| CHD | CHORD |
| CHH | COMMUNICATION HANDHOLE |
| CI | CURB INLET |
| CIP | CAST-IN-PLACE |
| CIPB | CONCRETE INTERLOCKING PAVER BALLAST |
| CIRC | CIRCULATION or CIRCULAR |
| CJ | CONSTRUCTION JOINT |
| CKT | CIRCUIT |
| CL | CENTERLINE or CLASS or CLOSE |
| CLG | CEILING |
| CLJ | CONTROL JOINT |
| CLKG | CAULKING |
| CLR | CLEAR |
| CMH | COMMUNICATION MANHOLE |
| CMU | CONCRETE MASONRY UNIT |
| CO | CLEAN OUT or CONCRETE OPENING |
| COL | COLUMN |
| COM | COMMON |
| COMB | COMBINATION |
| COMM | COMMUNICATION |
| COMP | COMPOSITION or COMPOSITE |
| CONC | CONCENTRIC or CONCRETE |
| CONN | CONNECTION |
| CONST | CONSTRUCTION |
| CONT | CONTINUOUS |
| CONTR | CONTRACTOR |
| COOR | COORDINATE |
| COR | CORNER |
| CORR | CORROSIVE or CORRUGATED |
| CP | CHECKER PLATE or CONTROL POINT |
| CPLG | COUPLING |
| CPRSR | COMPRESSOR |
| CRL | CORROSION RESISTANT LINING |
| CSC | COMPRESSION SLEEVE COUPLING |
| CSK | COUNTERSINK |
| CSS | CLINIC SERVICE SINK |
| CT | CERAMIC TILE |
| CTR | CENTER |
| CTRL | CONTROL |
| CVT | CULVERT |
| CU | COPPER or CUBIC |
| CW | CLOCKWISE |
| CY | CUBIC YARD |
| d | PENNY (NAIL MEASURE) |
| D | DEEP or DIFFUSER |
| DB | DUCT BANK or DECIBEL or DRY BULB |
| DBA | DEFORMED BAR ANCHOR |
| DBL | DOUBLE |
| DC | DIRECT CURRENT |
| DEG | DEGREE |
| DEG C | DEGREE CENTIGRADE |
| DEG F | DEGREE FAHRENHEIT |
| DEMO | DEMOLITION |
| DEP | DEPRESSED |
| DEPT | DEPARTMENT |
| DET | DETAIL |
| DI | DROP INLET or DUCTILE IRON |
| DIA | DIAMETER |
| DIAG | DIAGONAL or DIAGRAM |
| DIFF | DIFFERENTIAL or DIFFERENCE |
| DIM | DIMENSION |
| DISCH | DISCHARGE |
| DIST | DISTANCE or DISTRIBUTION |
| DIV | DIVISION |
| DL | DEAD LOAD |
| DMJ | DOUBLE MECHANICAL JOINT |
| DMPF | DAMP PROOFING |
| DN | DOWN |
| DO | DISSOLVED OXYGEN or DITTO |
| DP | DEPTH |
| DPDT | DOUBLE POLE, DOUBLE THROW |
| DPST | DOUBLE POLE, SINGLE THROW |
| DS | DOWN SPOUT |
| DT | DOUBLE TEE or DRIP TRAP ASSEMBLY |
| DUP | DUPLICATE |
| DWG | DRAWING |
| DWL | DOWEL |
| DWR | DRAWER |
| E | EAST or ELECTRICAL (DWG DISCIPLINE) |
| EA | EACH or EXHAUST AIR |
| EC | ELECTRICAL CONTRACTOR |
| ECC | ECCENTRIC |
| ED | EQUIPMENT DRAIN |
| EDB | ELECTRICAL DUCT BANK |
| EE | EACH END |
| EF | EACH FACE |
| EFF | EFFLUENT or EFFICIENCY |
| EHH | ELECTRICAL HANDHOLE |
| EIFS | EXTERIOR INSULATION & FINISH SYSTEM |
| EJ | EXPANSION JOINT |
| EL | ELBOW or ELEVATION |
| ELEC | ELECTRICAL |
| EMBD | EMBEDDED |
| EMER | EMERGENCY |
| EMH | ELECTRICAL MANHOLE |
| ENCL | ENCLOSURE |
| ENGR | ENGINEER |
| ENTR | ENTRANCE |
| EOP | EDGE OF PAVEMENT |
| EQ | EQUAL |
| EQUIP | EQUIPMENT |
| EQUIV | EQUIVALENT |
| ES | EACH SIDE or EQUAL SPACE or EMERGENCY SHOWER |
| ESEW | EMERGENCY SHOWER AND EYE WASH |
| EST | ESTIMATE |
| EW | EACH WAY or EMERGENCY EYE/FACE WASH |
| EWC | ELECTRIC WATER COOLER |
| EWEF | EACH WAY, EACH FACE |
| EWTB | EACH WAY, TOP AND BOTTOM |
| EXC | EXCAVATION |
| EXH | EXHAUST |
| EXST | EXISTING |
| EXP | EXPANSION or EXPOSED |
| EXT | EXTERIOR or EXTERNAL or EXTENSION |
| F&B | FACE & BYPASS |
| F TO F | FACE TO FACE |
| FAB | FABRICATE |
| FB | FLOOR BEAM |
| FBD | FIBERBOARD |
| FBG | FIBERGLASS |
| FBM | BOARD FOOT MEASURE |
| FBO | FURNISHED BY OWNER |
| FC | FLUSHING CONNECTION |
| FCA | FLANGED COUPLING ADAPTER |
| FD | FLOOR DRAIN |
| FDC | FLEXIBLE DUCT CONNECTION |
| FDTN | FOUNDATION |
| FDR | FEEDER |
| FE | FLANGED END |
| FEC | FIRE EXTINGUISHER CABINET |
| FES | FLARED END SECTION |
| FEXT | FIRE EXTINGUISHER |
| FF | FAR FACE or FACTORY FINISH or FLAT FACE |
| FFE | FINISH FLOOR ELEVATION |
| FG | FINISHED GRADE |
| FIG | FIGURE |
| FH | FIRE HYDRANT |
| FIN | FINISH |
| FJT | FLUSH JOINT |
| FL | FLOW or FLOW LINE |
| FLEX | FLEXIBLE |
| FLG | FLANGE |
| FLOR | FLUORESCENT |
| FLR | FLOOR |
| FLS | FLASHING or FLUSH |
| FO | FINISHED OPENING |
| FN | FENCE |
| FOB | FLAT ON BOTTOM |
| FOC | FACE OF CONCRETE or FACE OF CURB |
| FOF | FACE OF FINISH |
| FOM | FACE OF MASONRY |
| FOS | FACE OF STUDS |
| FOT | FLAT ON TOP |
| FPT | FEMALE PIPE THREAD |
| FR | FRAME |
| FRP | FIBERGLASS REINFORCED PLASTIC |
| FRTM | FIRE RETARDANT TREATED MATERIAL |
| FS | FLOOR SINK or FAR SIDE |
| FT | FEET or FOOT |
| FTG | FOOTING or FITTING |
| FUR | FURRED or FURRING |
| FURN | FURNITURE or FURNISH |
| FUT | FUTURE |
| FV | FACE VELOCITY |
| FW | FIELD WELD or FIRE WALL |
| FWD | FORWARD |
| FWE | FURNISHED WITH EQUIPMENT |
| FXTR | FIXTURE |
| G | GRILLE or GROUND or GENERAL (DWG DISCIPLINE) |
| GA | GAGE (METAL THICKNESS) |
| GAL | GALLON |
| GALV | GALVANIZED |
| GB | GRAB BAR or GRADE BREAK |
| GC | GROOVED COUPLING |
| GD | GUARD |
| GEN | GENERAL |
| GFCI | GROUND FAULT CIRCUIT INTERRUPTER |
| GFMU | GROUND FACE MASONRY UNIT |
| GG | GUTTER GRADE |
| GJ | GROOVED JOINT |
| GL | GLASS |
| GLB | GLASS BLOCK |
| GND | GROUND |
| GP | GUY POLE |
| GR | GRADE |
| GRTG | GRATING |
| GSB | GYPSUM SHEATHING BOARD |
| GT | GREASE TRAP |
| GVL | GRAVEL |
| GWB | GYPSUM WALLBOARD |
| GYP | GYPSUM HARDBOARD |
| H | HIGH |
| HB | HOSE BIB |
| HBD | HARDBOARD |
| HC | HANDICAPPED or HOLLOW CORE or HORIZONTAL CURVE |
| HC | HORIZONTAL CENTERLINE |
| HDR | HEADER |
| HDW | HARDWARE |
| HEX | HEXAGONAL |
| HGR | HANGER |
| HH | HANDHOLE |
| HID | HIGH INTENSITY DISCHARGE |
| HM | HOLLOW METAL |
| HORIZ | HORIZONTAL |
| HP | HIGH POINT or HORSEPOWER |
| HPC | HORIZONTAL POINT OF CURVATURE |
| HPS | HIGH PRESSURE SODIUM |
| HPT | HORIZONTAL POINT OF TANGENCY |
| HR | HOSE REEL or HOUR |
| HS | HEADED STUD or HIGH STRENGTH |
| HSS | HOLLOW STRUCTURAL SHAPE |
| HT | HEIGHT |
| HTG | HEATING |
| HV | HIGH VOLTAGE |
| HVAC | HEATING or VENTILATION & AIR CONDITIONING |
| HWD | HARDWOOD |
| HWL | HIGH WATER LEVEL |
| HYD | HYDRAULIC |
| HZ | HERTZ, CYCLES PER SECOND |
| I | INSTRUMENTATION (DWG DISCIPLINE) |
| ID | INSIDE DIAMETER or INTERIOR DIMENSION |
| IE | INVERT ELEVATION |
| IF | INSIDE FACE |
| IH | INTAKE HOOD |
| IMP | IMPACT |
| IN | INCH |
| INC | INCLUDE or INCANDESCENT |
| INF | INFLUENT |
| INSTR | INSTRUMENTATION |
| INSUL | INSULATION |
| INT | INTERIOR or INTERSECTION |
| INTR | INTERMEDIATE or INTERIOR |
| INV | INVERT |
| IPS | IRON PIPE SIZE |
| IPT | INTERNAL PIPE THREAD |
| IR | INSIDE RADIUS |
| IRR | IRRIGATION |
| ISO | ISOMETRIC |
| JB | JUNCTION BOX |
| JCT | JUNCTION |
| JF | JOINT FILLER |
| JST | JOIST |
| JT | JOINT |
| K | KIP |
| KB | KNEE BRACE |
| KCMIL | THOUSAND CIRCULAR MILS |
| KD | KNOCK DOWN |
| KO | KNOCK OUT |
| KSI | KIPS PER SQUARE INCH |
| L | ANGLE (SHAPE) or LENGTH or LAVATORY |
| LAD | LADDER |
| LAM | LAMINATE |
| LATL | LATERAL |
| LB | LAG BOLT or POUND |
| LCTB | LIQUID CHALK AND TACK BOARD |
| LDG | LANDING |
| LDR | LEADER |
| LE | LIFTING EYE |
| LEMJ | LARGE END MECHANICAL JOINT |
| LF | LINEAR FOOT |
| LG | LONG |
| LH | LEFT HAND |
| LIN | LINEAR |
| LIQ | LIQUID |
| LLH | LONG LEG HORIZONTAL |
| LLV | LONG LEG VERTICAL |
| LMLU | LIQUID MARKER LECTURE UNIT |
| LNG | LONGITUDINAL |
| LOC | LOCATION |
| LP | LOW POINT |
| LPS | LOW PRESSURE SODIUM |
| LR | LONG RADIUS |
| LT | LEFT |
| LTD | LIMITED |
| LTG | LIGHTING |
| LTL | LINTEL |
| LTNG | LIGHTNING |
| LV | LOW VOLTAGE |
| LVR | LOUVER |
| LW | LIGHTWEIGHT |
| LWC | LIGHTWEIGHT CONCRETE |
| LWL | LOW WATER LEVEL |
| M | MECHANICAL (DWG DISCIPLINE) |
| MA | MIXED AIR |
| MACH | MACHINED |
| MAINT | MAINTENANCE |
| MAN | MANUAL |
| MATL | MATERIAL |
| MAX | MAXIMUM |
| MB | MACHINE BOLT |
| MBR | MEMBER |
| MC | MECHANICAL COUPLING or MECHANICAL CONTRACTOR |
| MCB | METAL CORNER BEAD |
| MCJ | MASONRY CONTROL JOINT |
| MDMJ | MODIFIED DOUBLE MECHANICAL JOINT |
| MECH | MECHANICAL |
| MED | MEDIUM |
| MFR | MANUFACTURER |
| MH | MANHOLE or METAL HALIDE |
| MIN | MINIMUM |
| MIR | MIRROR |
| MISC | MISCELLANEOUS |
| MJ | MECHANICAL JOINT |
| MJ&PE | MECHANICAL JOINT AND PLAIN END |
| MLO | MAIN LUGS ONLY |
| MMB | MEMBRANE |
| MO | MASONRY OPENING |
| MOD | MODULAR or MODIFY |
| MON | MONUMENT |
| MPT | MALE PIPE THREAD |
| MRGWB | MOISTURE RESISTANT GYPSUM WALLBOARD |
| MS | MOP SINK |
| MSL | MEAN SEA LEVEL |
| MT | MOUNT |
| MU | MASONRY UNIT |
| MULL | MULLION |
| MV | MEDIUM VOLTAGE |
| MW | MONITORING WELL |
| N | NORTH or NEUTRAL |
| NA | NOT APPLICABLE |
| NAT | NATURAL |
| NC | NORMALLY CLOSED |
| NEG | NEGATIVE |
| NF | NEAR FACE or NON-FUSED |
| NIC | NOT IN CONTRACT |
| NO | NORMALLY OPEN or NUMBER |
| NOM | NOMINAL |
| NPS | NOMINAL PIPE SIZE |
| NPT | NATIONAL PIPE THREAD |
| NS | NEAR SIDE |
| NTS | NOT TO SCALE |
| NWL | NORMAL WATER LEVEL |
| O TO O | OUT-TO-OUT |
| OA | OUTSIDE AIR or OVERALL |
| OC | ON CENTER |
| OCPD | OVER CURRENT PROTECTION DEVICE |
| OD | OUTSIDE DIAMETER |
| OED | OPEN END DUCT |
| OF | OUTSIDE FACE or OFFICE FURNISHING |
| OG | ORIGINAL GROUND |
| OH | OVERHEAD |
| OPNG | OPENING |
| OPP | OPPOSITE |
| OPT | OPTIONAL |
| OR | OUTSIDE RADIUS |
| ORD | OVERFLOW ROOF DRAIN |
| ORIG | ORIGINAL |
| OVFL | OVERFLOW |
| OVHG | OVERHANG |
| OZ | OUNCE |
| P | PAINT or PROCESS (DWG DISCIPLINE) |
| PA | PUBLIC ADDRESS |
| PAR | PARALLEL or PARAPET |
| PB | PULL BOX or PANIC BAR |
| PBD | PARTICLE BOARD |
| PC | POINT OF CURVE or PIECE or PRECAST |
| PCC | POINT OF COMPOUND CURVATURE |
| PCF | POUNDS PER CUBIC FOOT |
| PCT | PERCENT |
| PE | PLAIN END |
| PED | PEDESTAL |
| PEN | PENETRATION |
| PERF | PERFORATED |
| PERM | PERMANENT |
| PERP | PERPENDICULAR |
| PF | POWER FACTOR |
| PFMU | PREFACED MASONRY UNIT |
| PH | PHASE |
| PI | POINT OF INTERSECTION |
| PKG | PACKAGE |
| PL | PLATE or PROPERTY LINE |
| PLAS | PLASTER |
| PLAT | PLATFORM |
| PLBG | PLUMBING |
| PLF | POUNDS PER LINEAR FOOT |
| PNEU | PNEUMATIC |
| POL | POLISH |
| POS | POSITIVE or POSITION |
| PP | POWER POLE or POLYPROPYLENE |
| PRC | POINT OF REVERSE CURVATURE |
| PREF | PREFINISHED |
| PREFAB | PREFABRICATED |
| PRELIM | PRELIMINARY |
| PREP | PREPARE |
| PRES | PRESSURE |
| PRI | PRIMARY |
| PROP | PROPERTY |
| PROT | PROTECTION |
| PS | PIPE SUPPORT |
| PSF | POUNDS PER SQUARE FOOT |
| PSI | POUNDS PER SQUARE INCH |
| PSIA | POUNDS PER SQUARE INCH ABSOLUTE |
| PSIG | POUNDS PER SQUARE INCH GAGE |
| PST | PRESTRESSED |
| PT | POINT or POINT OF TANGENCY |
| PTN | PARTITION |
| PVC | POLYVINYL CHLORIDE |
| PVMT | PAVEMENT |
| PWD | PLYWOOD |
| PWJ | PLYWOOD WEB JOIST |
| PZ | PIEZOMETER |
| Q | RATE OF FLOW |
| QT | QUARRY TILE |
| QTR | QUARTER |
| QTY | QUANTITY |
| QUAL | QUALITY |
| R&R | REMOVE AND REPLACE |
| R&S | REMOVE AND SALVAGE |
| R | RADIUS or REGISTER or RISER |
| RA | RETURN AIR |
| RB | RESILIENT BASE or ROCK BERM |
| RCPT | RECEPTACLE |
| RD | ROOF DRAIN |
| REC | RECESS |
| RECD | RECEIVED |
| RECT | RECTANGULAR |
| RED | REDUCER |
| REF | REFERENCE |
| REINF | REINFORCING |
| REM | REMOVE |
| REQD | REQUIRED |
| RESIL | RESILIENT |
| RET | RETAINING or RETURN |
| REV | REVISION or REVERSE |
| RF | RESILIENT FLOORING |
| RFG | ROOFING |
| RFL | REFLECTED or REFLECTOR |
| RGH | ROUGH |
| RGS | RIGID GALVANIZED STEEL |
| RGS-PVC | PVC COATED RGS |
| RH | RELIEF HOOD or RIGHT HAND or RELATIVE HUMIDITY |
| RL | REQUIRED LAP |
| RLFA | RELIEF AIR |
| RND | ROUND |
| RNG | RUNNING |
| RO | ROUGH OPENING |
| ROW | RIGHT OF WAY |
| RPM | REVOLUTIONS PER MINUTE |
| RR | RAILROAD |
| RSP | ROCK SLOPE PROTECTION |
| RT | RIGHT |
| RVT | RESILIENT VINYL TILE |
| RY | READY |
| S | SOUTH or SINK or STRUCTURAL (DWG DISCIPLINE) |
| SA | SUPPLY AIR |
| SAMU | SOUND ABSORBING MASONRY UNIT |
| SAN | SANITARY |
| SB | SPLASH BLOCK |
| SC | SOLID CORE |
| SCH | SCHEDULE |
| SCHEM | SCHEMATIC |
| SCN | SCREEN |
| SE | STEEL/ALUMINUM EDGE |
| SEC | SECONDARY or SECONDS |
| SECT | SECTION |
| SEMJ | SMALL END MECHANICAL JOINT |
| SEP | SEPARATE |
| SF | SQUARE FOOT |
| SG | SHEET GLASS or SEALANT GROOVE |
| SH | SHOWER |
| SHT | SHEET |
| SHTG | SHEATHING |
| SIL | SILENCE |
| SIM | SIMILAR |
| SL | SLOPE |
| SLTD | SLOTTED |
| SLV | SLEEVE |
| SMLS | SEAMLESS |
| SOG | SLAB ON GRADE |
| SP | SOUNDPROOF or STANDPIPE |
| SPA | SPACING |
| SPEC | SPECIFICATION |
| SPLY | SUPPLY |
| SPST | SINGLE POLE, SINGLE THROW |
| SPT | SET POINT |
| SQ | SQUARE |
| SR | SHORT RADIUS |
| SS | SERVICE SINK |
| SST | STAINLESS STEEL |
| ST | STREET |
| STA | STATION |
| STD | STANDARD |
| STIF | STIFFENER |
| STIR | STIRRUP |
| STL | STEEL |
| STOR | STORAGE |
| STR | STRUCTURAL or STRAIGHT |
| SUB | SUBSTITUTE |
| SUC | SUCTION |
| SUSP | SUSPENDED |
| SY | SQUARE YARD |
| SYM | SYMBOL |
| SYMM | SYMMETRICAL |
| SYN | SYNTHETIC |
| SYS | SYSTEM |
| T&B | TOP AND BOTTOM |
| T&G | TONGUE AND GROOVE |
| T | TILE or TREAD |
| TA | TOILET ACCESSORY or TEMPERED AIR |
| TAN | TANGENT |
| TBM | TEMPORARY BENCHMARK |
| TCE | TEMPORARY CONSTRUCTION EASEMENT |
| TEF | TROWELED EPOXY FLOORING |
| TEMP | TEMPORARY or TEMPERATURE |
| THD | THREAD |
| THK | THICK |
| THRESH | THRESHOLD |
| THRU | THROUGH |
| TKBD | TACK BOARD |
| TOB | TOP OF BOLT or TOP OF BANK or TOP OF BEAM |
| TOC | TOP OF CURB or TOP OF CONCRETE |
| TOD | TOP OF DUCT |
| TOF | TOP OF FOOTING |
| TOG | TOP OF GRATING |
| TOL | TOLERANCE or TOP OF LEDGER |
| TOM | TOP OF MASONRY |
| TOP | TOP OF PLATE |
| TOPO | TOPOGRAPHY |
| TOS | TOP OF SLAB or TOP OF STEEL |
| TOW | TOP OF WALL |
| TP | TOILET PARTITION or TELEPHONE POLE or TOE PLATE or TRAP PRIMER |
| TPD | TOILET PAPER DISPENSER |
| TPG | TOPPING |
| TR | TRANSOM |
| TRANS | TRANSITION or TRANSVERSE |
| TRD | TRENCH DRAIN |
| TYP | TYPICAL |
| U | URINAL |
| UG | UNDERGROUND |
| ULT | ULTIMATE |
| UNFN | UNFINISHED |
| UNO | UNLESS NOTED OTHERWISE |
| UTIL | UTILITY |
| V | VENT or VELOCITY or VOLT |
| VA | VOLT AMPERE |
| VAC | VACUUM |
| VAR | VARNISH or VARIABLE or VOLT AMPERES REACTIVE |
| VB | VAPOR BARRIER or VINYL BASE or VALVE BOX |
| VC | VERTICAL CURVE |
| VCP | VENTILATION CONTROL PANEL |
| VCT | VINYL COMPOSITION TILE or VERTICAL CENTERLINE |
| VEL | VELOCITY |
| VENT | VENTILATION |
| VERT | VERTICAL |
| VG | VERTICAL GRAIN |
| VIF | VERIFY IN FIELD |
| VIN | VINYL |
| VS | VERSES or VAPOR SEAL |
| VOL | VOLUME |
| VPC | VERTICAL POINT OF CURVATURE |
| VPI | VERTICAL POINT OF INTERSECTION |
| VPT | VERTICAL POINT OF TANGENCY |
| VTR | VENT THROUGH ROOF |
| VWC | VINYL WALL COVERING |
| W/ | WITH |
| W/O | WITHOUT |
| W | WATT or WEST or WIDE or WINDOW or WIRE or WIDE FLANGE BEAM |
| WB | WOOD BASE |
| WC | WATER CLOSET or WATER COLUMN |
| WD | WOOD or WIDTH |
| WF | WIDE FLANGE or WASH FOUNTAIN |
| WG | WIRE GLASS or WATER GAGE |
| WH | WALL HYDRANT or WEEP HOLE |
| WI | WROUGHT IRON |
| WL | WATER LEVEL |
| WLD | WELDED |
| WM | WIRE MESH |
| WP | WATERPROOF or WORKING POINT |
| WPCP | WATER POLLUTION CONTROL PLANT |
| WTHP | WEATHERPROOF |
| WS | WATERSTOP or WATER SURFACE |
| WSCT | WAINSCOT |
| WT | WEIGHT or WATER TIGHT |
| WWF | WELDED WIRE FABRIC |
| XFMR | TRANSFORMER |
| XP | EXPLOSION PROOF |
| XS | EXTRA STRONG |
| XXS | DOUBLE EXTRA STRONG |
| XSECT | CROSS SECTION |
| YH | YARD HYDRANT |
| YS | YIELD STRENGTH |

## GENERAL NOTES:

1. THESE ABBREVIATIONS APPLY TO THE ENTIRE SET OF CONTRACT DRAWINGS.
2. LISTING OF ABBREVIATIONS DOES NOT IMPLY ALL ABBREVIATIONS ARE USED IN THE CONTRACT DRAWINGS.
3. ABBREVIATIONS SHOWN ON THIS DRAWING INCLUDE VARIATIONS OF THE WORD. FOR EXAMPLE, "MOD" MAY MEAN MODIFY OR MODIFICATION; "INC" MAY MEAN INCLUDED OR INCLUDING; "REINF" MAY MEAN EITHER REINFORCE OR REINFORCING.
4. SCREENING OR SHADING OF WORK IS USED TO INDICATE EXISTING COMPONENTS OR TO DE-EMPHASIZE PROPOSED IMPROVEMENTS TO HIGHLIGHT SELECTED TRADE WORK. REFER TO CONTEXT OF EACH DRAWING FOR USAGE.
5. SEE PROJECT EQUIPMENT AND PIPING SYSTEMS DRAWING FOR SYMBOLS AND ABBREVIATIONS SPECIFIC TO THE PROJECT.

FILE: 215786-000003.dwg
DATE: Oct 07, 2015 - 4:25:57pm, rsnider

HDR Engineering, Inc.

| ISSUE | DATE | DESCRIPTION |
|---|---|---|
| A | JUNE 2015 | ISSUED FOR BID |

| | |
|---|---|
| PROJECT MANAGER | C. OLSON |
| DESIGNED | R. NATOLI |
| DESIGNED | |
| CHECKED | C. OLSON |
| DRAWN | B. DOWN |
| DATE | JUNE 30, 2015 |
| PROJECT NUMBER | ~~215786~~ |

REGISTERED PROFESSIONAL ENGINEER
CRAIG A. OLSON
NO. 39819
EXP. 12/31/15
CIVIL
STATE OF CALIFORNIA
04-30-15

CITY OF PINOLE CALIFORNIA 1903

PINOLE/HERCULES
WATER POLLUTION
CONTROL PLANT UPGRADE
CLIENT PN

**GENERAL**

**ABBREVIATIONS**

0 1" 2"

| | |
|---|---|
| FILENAME | 0,0 |
| SCALE | NONE |

SHEET **00G003**

## GENERAL

- EXISTING EQUIPMENT OR MATERIALS TO BE REMOVED (SCREENED)
- TO BE BUILT FOR FUTURE REMOVAL
- NEW FACILITIES (SOLID)
- EXISTING (SCREENED)
- PROPERTY LINE
- PHANTOM LINE OR MATCH LINE
- CENTERLINE
- HIDDEN LINE OR FUTURE IMPROVEMENTS
- WATER SURFACE

- & OR ⧲ — AND
- ∠ OR L — ANGLE
- ℄ — CENTER LINE
- ℙ OR PL — PLATE OR PROPERTY LINE
- (2) OR ⟨2⟩ — KEYNOTE
- @ — AT
- (E) — EXISTING
- (N) — NEW

## CIVIL

- NATURAL GROUND OR GRADE
- GRANULAR MATERIAL SUCH AS CRUSHED ROCK OR GRAVEL
- PAVEMENT IN PLAN (TYPE AS NOTED)
- AC PAVEMENT IN SECTION
- LIME TREATED SUBGRADE
- FENCE
- 110 — EXISTING GRADE CONTOURS (OR SCREENED)
- 110 — FINISH GRADE CONTOURS
- X 120.0 — EXISTING SPOT ELEVATION (OR SCREENED)
- 110.50 / X — FINISH GRADE SPOT ELEVATION
- 112.50 / 112.00 — TOP OF CURB ELEVATION / GUTTER/FLOWLINE ELEVATION
- SWALE OR DEPRESSION

- EDGE OF WATER; FLOWLINE WITH DIRECTIONAL ARROW
- 3:1 — SLOPE (3 HOR TO 1 VERT)
- CUT OR FILL SLOPE; ARROWS POINT DOWN SLOPE
- TREES, SHRUBS OR HEDGE
- P9 — SURVEY CONTROL POINT,
- HYDRANT
- MH — MANHOLE
- CB — CATCH BASIN OR INLET
- UTILITY POLE
- SURVEY MONUMENT
- RETAINING WALL

## ARCHITECTURAL / STRUCTURAL

- CONCRETE
- REINFORCEMENT IN SECTION
- PRECAST CONCRETE
- MORTAR, GROUT OR PLASTER
- CONCRETE BLOCK
- BRICK OR CAST IRON
- GRATING SPAN
- CHECKER PLATE
- STEEL OR STAINLESS STEEL
- ALUMINUM
- WOOD
- RIGID INSULATION
- BATT INSULATION

- NEOPRENE, RUBBER OR PLASTIC
- OPENING OR DEPRESSION IN SLAB OR WALL
- OPENING WITH GRATING COVER
- OPENING WITH CHECKER PLATE COVER
- METAL STUD WITH LATH AND PLASTER PARTITION
- JOINT FILLER
- WATER STOP
- GUARDRAIL TYPE "A" (PUBLIC ACCESS)
- GUARDRAIL TYPE "B"
- 2 — SLIDE GATE OPENING AND DESIGNATION (PLAN)
- 21 — NOTE REFERENCE NUMBER
- F — FIRE EXTINGUISHER
- HOISTING HOOK

## VALVES

- THREE WAY VALVE
- GATE VALVE (NORMALLY OPEN)
- GATE VALVE (NORMALLY CLOSED)
- PLUG VALVE (NORMALLY OPEN)
- PLUG VALVE (NORMALLY CLOSED)
- BALL VALVE (NORMALLY OPEN)
- BALL VALVE (NORMALLY CLOSED)
- BUTTERFLY VALVE
- GLOBE VALVE (NORMALLY OPEN)
- GLOBE VALVE (NORMALLY CLOSED)
- DIAPHRAGM VALVE (NORMALLY OPEN)
- DIAPHRAGM VALVE (NORMALLY CLOSED)
- DIAPHRAGM VALVE (MECHANICAL SHEETS)
- ANGLE VALVE
- FLOAT VALVE
- PINCH VALVE
- NEEDLE VALVE
- DOUBLE LEAF CHECK VALVE
- IN-LINE, SPRING LOADED RELIEF VALVE

- SWING CHECK VALVE
- BALL CHECK VALVE
- PUMP DISCHARGE VALVE
- GAUGE OR ROOT VALVE
- KNIFE GATE VALVE
- FLAP GATE
- BALANCING COCK
- CIRCUIT SETTER
- THERMOSTATICALLY CONTROLLED VALVE
- PRESSURE AND VACUUM RELIEF VALVE
- VACUUM RELIEF VALVE
- PRESSURE RELIEF VALVE
- BACK PRESSURE REGULATING VALVE
- MUD VALVE
- PRESSURE REGULATING VALVE

## ACTUATORS

- MOP — MOTOR OPERATED VALVE
- S / XX — SOLENOID VALVE
- XX — DIAPHRAGM OPERATED VALVE
- S / XX — PISTON OPERATED VALVE

| XX | FAIL POSITION |
|---|---|
| FO | FAIL OPEN |
| FC | FAIL CLOSED |
| FLP | FAILED LAST POSITION |

## MECHANICAL

PIPE & FITTINGS

| SINGLE LINE | DOUBLE LINE | |
|---|---|---|
| | | FLANGED JOINT |
| | | PLAIN OR GROOVED END MECHANICAL COUPLING |
| | | PUSH ON, MECHANICAL OR BALL AND SOCKET JOINT |
| | | WELDED JOINT |
| | | SLEEVE TYPE MECHANICAL COUPLING |
| | | RESTRAINED SLEEVE TYPE MECHANICAL COUPLING |
| | | FLANGED COUPLING ADAPTER |
| | | RESTRAINED FLANGED COUPLING ADAPTER |
| | | UNION |

| SINGLE LINE | DOUBLE LINE | |
|---|---|---|
| | | ELASTOMER AND FABRIC EXPANSION JOINT |
| | | EXPANSION JOINT (SEE SPECS FOR TYPE) |
| | | FLEXIBLE METAL HOSE |
| | | ELBOW UP |
| | | ELBOW DOWN |
| | | TEE UP |
| | | TEE DOWN |
| | | LATERAL UP |
| | | LATERAL DOWN |
| | | CONCENTRIC REDUCER |
| | | ECCENTRIC REDUCER |

## MISCELLANEOUS DEVICES

- A — UTILITY STATION (LETTER, IF ANY, DESIGNATES TYPE), SEE 'M' SHEET FOR DETAILS
- HOSE RACK
- FLOOR DRAIN
- EQUIPMENT DRAIN
- VERTICAL DRAIN
- VENT

- XCO — CLEANOUT; X=DESIGNATION IF ANY
- PIPE ANCHOR
- PIPE GUIDE
- ROTAMETER

## GENERAL NOTES

1. THIS SHEET IS GENERAL IN NATURE. SOME SYMBOLS SHOWN HEREON MAY NOT BE USED ON THE CONTRACT PLANS.
2. SEE SHEET 00G003 FOR ABBREVIATIONS.
3. SEE SHEETS 00G005 AND 00G006 FOR EQUIPMENT AND PIPING SYSTEMS DESIGNATIONS.
4. SEE SHEETS 00E001 AND 00I001 FOR ADDITIONAL SYMBOLS.
5. SYMBOLS ARE ARRANGED ON SPECIFIC SHEETS AND IN CATEGORIES FOR CONVENIENCE ONLY; SYMBOLS MAY BE USED ON ANY OF THE CONTRACT SHEETS.
6. SCREENING OR SHADING OF LINEWORK IS USED TO INDICATE EXISTING COMPONENTS OR TO DEEMPHASIZE PROPOSED IMPROVEMENTS TO HIGHLIGHT SELECTED TRADE WORK, REFER TO CONTEXT OF EACH SHEET FOR USEAGE.

FILE: 215786-00G004.dwg
DATE: Oct 07, 2015-4:26:02pm, rsnider

HDR Engineering, Inc.

| ISSUE | DATE | DESCRIPTION |
|---|---|---|
| A | JUNE 2015 | ISSUED FOR BID |

| | |
|---|---|
| PROJECT MANAGER | C. OLSON |
| DESIGNED | R. NATOLI |
| DESIGNED | |
| CHECKED | C. OLSON |
| DRAWN | B. DOWN |
| DATE | JUNE 30, 2015 |
| PROJECT NUMBER | ~~215786~~ |

REGISTERED PROFESSIONAL ENGINEER — CRAIG A. OLSON — NO. 39819 EXP. 12/31/15 — CIVIL — STATE OF CALIFORNIA — 06-30-15

CITY OF PINOLE CALIFORNIA 1903

PINOLE/HERCULES WATER POLLUTION CONTROL PLANT UPGRADE
CLIENT PN

**GENERAL**

**LEGEND AND SYMBOLS**

0 1" 2"

| FILENAME | 215786-00G004 |
|---|---|
| SCALE | NONE |

SHEET **00G004**

# DESIGNATIONS

## PROCESS AREA SUBDIVISION DESIGNATIONS

| PROCESS AREA CODE NUMBER | AREA/ROOM SUBDIVISION CODE NUMBER | PLANT DESCRIPTION | SHEET NUMBER | EQUIPMENT NUMBER |
|---|---|---|---|---|
| 0 | | GENERAL | | |
| | 0 | GENERAL | | |
| | 1 | SITE STRUCTURES AND EQUIPMENT | | |
| | 2 | SITE GRADING AND PAVING | | |
| | 3 | SITE PIPING | | |
| | 4 | LANDSCAPE | | |
| | 5 | CATHODIC PROTECTION | | |
| | 6 | OUTFALL PIPELINE | | |
| 1 | | HEADWORKS | | |
| | 0 | GENERAL | | |
| | 1 | INLET FLOW MEASUREMENT | | |
| | 2 | SCREENING/PUMPING AREA | | |
| | 3 | GRIT AREA | | |
| | 4 | ELECTRICAL BUILDING/GENERATOR | | |
| | 5 | ODOR CONTROL | | |
| 2 | | PRIMARY CLARIFIERS | | |
| | 0 | GENERAL | | |
| | 1 | PRIMARY CLARIFIERS | | |
| | 2 | PRIMARY INFLUENT DISTRIBUTION | | |
| | 3 | PRIMARY SCUM PUMPING | | |
| | 4 | | | |
| | 5 | PRIMARY SLUDGE PUMPING | | |
| 3 | | AERATION BASINS | | |
| | 0 | GENERAL | | |
| | 1 | AERATION BASINS | | |
| | 2 | PRIMARY EFFLUENT AND MIXED LIQUOR SPLITTER BOX | | |
| | 3 | | | |
| | 4 | | | |
| | 5 | | | |
| 4 | | SECONDARY CLARIFIERS | | |
| | 0 | GENERAL | | |
| | 1 | SECONDARY CLARIFIERS | | |
| | 2 | RAS PUMPING | | |
| | 3 | WAS PUMPING | | |
| | 4 | | | |
| | 5 | | | |
| 5 | | BLOWER BUILDING | | |
| | 0 | GENERAL | | |
| | 1 | BLOWER ROOM | | |
| | 2 | | | |
| | 3 | | | |
| | 4 | | | |
| | 5 | | | |
| 6 | | SOLIDS HANDLING | | |
| | 0 | GENERAL | | |
| | 1 | SOLIDS THICKENING AND BLENDING | | |
| | 2 | SOLIDS DEWATERING | | |
| | 3 | ODOR CONTROL | | |
| | 4 | GRAVITY SLUDGE THICKENER | | |
| | 5 | POLYMER | | |
| | 6 | MAINTENANCE SHOP | | |
| 7 | | DISINFECTION | | |
| | 0 | GENERAL | | |
| | 1 | CHLORINE CONTACT BASIN | | |
| | 2 | 3W SYSTEM | | |
| | 3 | EMERGENCY OUTFALL STRUCTURE | | |
| | 4 | | | |
| | 5 | HYPOCHLORITE/BISUFITE STORAGE | | |
| | 6 | FERRIC CHLORIDE STORAGE | | |
| | 7 | SODIUM HYDROXIDE STORAGE | | |
| 8 | | DIGESTERS | | |
| | 0 | GENERAL | | |
| | 1 | DIGESTERS | | |
| | 2 | DIGESTER CONTROL BUILDING | | |
| | 3 | | | |
| | 4 | | | |
| | 5 | WASTE GAS BURNER | | |
| 9 | | EFFLUENT PUMPING | | |
| | 0 | GENERAL | | |
| | 1 | PUMP STATION | | |
| | 2 | SURGE TANK | | |
| | 3 | | | |
| | 4 | | | |
| | 5 | | | |

## SHEET & PROCESS AREA DESIGNATION SYSTEMS

SHEETS ARE SUBDIVIDED BY DISCIPLINE AS FOLLOWS:

- G – GENERAL
- D – DEMOLITION
- C – CIVIL
- L – LANDSCAPE
- A – ARCHITECTURAL
- S – STRUCTURAL
- P – PROCESS
- M – MECHANICAL
- E – ELECTRICAL
- I – INSTRUMENTATION

## EQUIPMENT

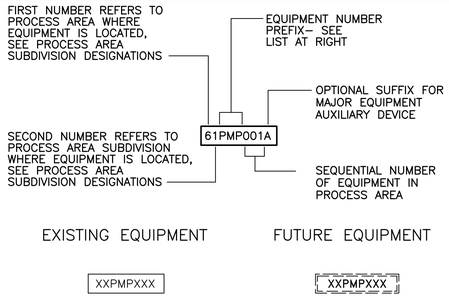


## ROOM NUMBERING DESIGNATIONS

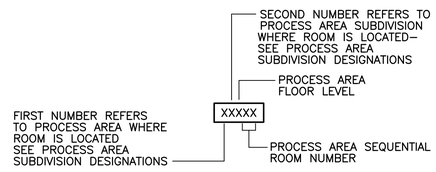


## DOOR NUMBERING DESIGNATIONS

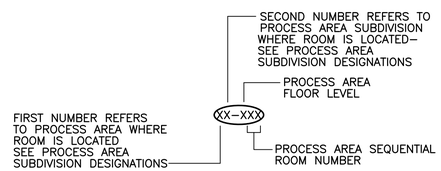


## WALL/WINDOW TYPES

WALL TYPES AND WINDOW TYPES ARE IDENTIFIED AS:

# EQUIPMENT NUMBER PREFIXES

| | |
|---|---|
| A | AERATOR |
| ABI | AERATION BASIN INFLUENT |
| ACC | AIR CONDITIONING COIL |
| ACU | AIR CONDITIONING UNIT |
| AD | AIR DRYER |
| AF | AIR FILTER |
| AFD | ADJUSTABLE FREQUENCY DRIVE |
| AHC | AIR HANDLING UNIT WITH COIL |
| AHU | AIR HANDLING UNIT |
| ANA | ANALYZER |
| ASC | ADJUSTABLE SPEED CONTROLLER |
| ASD | ADJUSTABLE SPEED DRIVE |
| ATS | AUTOMATIC TRANSFER SWITCH |
| B | BLOWER |
| BF | BLIND FLANGE |
| BFP | BACKFLOW PREVENTER |
| BFU | BOILER FEEDWATER UNIT |
| BFV | BUTTERFLY VALVE |
| BG | BUTTERFLY GATE |
| BLR | BOILER |
| BNR | BURNER |
| BOX | HVAC BOX |
| BPV | BACK PRESSURE VALVE |
| BSC | BAR SCREEN |
| C | CLARIFIER/COIL |
| CAP | CAPACITOR |
| CAV | CONSTANT AIR VOLUME TERMINAL UNIT |
| CC | COOLING COIL |
| CDR | CONDENSER |
| CDU | CONDENSING UNIT |
| CFR | CHEMICAL FEEDER |
| CG | CENTRIFUGE |
| CHL | CHLORINATOR |
| CI | HYPOCHLORILE INDUCTION UNIT |
| CMP | COMPRESSOR |
| CPT | COMPACTOR |
| CPU | COMPUTER |
| CRN | CRANE |
| CRU | CONDENSATE RETURN UNIT |
| CV | CONTROL VALVE/CHECK VALVE |
| CVR | CONVEYOR |
| CY | CYCLONE |
| CYL | CYLINDER |
| DA | DEAERATOR |
| DAF | DISSOLVED AIR FLOTATION |
| DF | DRINKING FOUNTAIN |
| DHU | DEHUMIDIFIER |
| DIG | DIGESTER |
| DIS | DISTRIBUTOR |
| DPP | DIAPHRAGM PUMP |
| DPR | DAMPER |
| DRG | DREDGE |
| DS | DISCONNECT SWITCH |
| DSP | DOUBLE SUCTION PUMP |
| DT | DRIP TRAP |
| DU | DRIVE UNIT |
| DX | DIRECT EXPANSION COIL |
| EB | ENGINE–BLOWER MODULE |
| EC | EVAPORATIVE COOLER |
| EFP | EFFLUENT PUMP |
| EG | ENGINE–GENERATOR MODULE |
| ENG | ENGINE |
| EPR | EVAPORATOR |
| ESP | END SUCTION PUMP |
| F | FAN |
| FCS | FILTER SCREEN |
| FCU | FAN COIL UNIT |
| FCV | FLOW CONTROL VALVE |
| FE | FLOW ELEMENT |
| FG | FLAP GATE |
| FLC | FLOCCULATOR |
| FLT | FILTER |
| FP | FILTER PRESS |
| FPU | FLUID POWER UNIT |
| FUR | FURNACE |
| FV | FLOW CONTROLLED VALVE |
| GDR | GRINDER |
| GEN | GENERATOR |
| GRC | GRIT CLASSIFIER |
| GRP | GEAR PUMP |
| GST | GRAVITY SLUDGE THICKENER |
| GTR | GRIT REMOVER |
| GV | GRAVITY VENTILATOR |
| HC | HEATING COIL |
| HEX | HEAT EXCHANGER |
| HOP | HYDRAULIC OPERATOR |
| HP | HEAT PUMP |
| HS | HAND SWITCH |
| HST | HOIST |
| HTR | HEATER |
| HTT | HEAT TRACE TAPE |
| HUM | HUMIDIFIER |
| HV | HAND VALVE |
| IMC | INDIVIDUAL MOTOR CONTROLLER |
| INJ | INJECTOR |
| JB | JUNCTION BOX |
| KV | TIME (K) CONTROLLED VALVE |
| LAB | LABORATORY EQUIPMENT |
| LBK | LOADBANK |
| LCV | LEVEL CONTROL VALVE |
| LV | LEVEL CONTROLLED VALVE (NON SELF–ACTING) |
| LVR | LOUVER |
| M | MOTOR |
| MCC | MOTOR CONTROL CENTER |
| MEE | MISCELLANEOUS ELECTRICAL EQUIPMENT |
| MH | MANHOLE |
| MIE | MISCELLANEOUS INSTRUMENTATION EQUIPMENT |
| MME | MISCELLANEOUS MECHANICAL EQUIPMENT |
| MOP | MOTOR OPERATOR |
| MS | MOISTURE SEPARATOR |
| MSN | MECHANICAL SCREEN |
| MTS | MANUAL TRANSFER SWITCH |
| MUX | MULTIPLEXER |
| MVO | MOTOR VALVE OPERATOR |
| MVS | MEDIUM VOLTAGE SWITCH |
| MX | MIXER |
| MZU | MULTIZONE UNIT |
| OCU | ODOR CONTROL UNIT |
| ORF | ODOR REMOVAL FILTER |
| ORT | ODOR REDUCTION TOWER |
| ORU | ODOR REDUCTION UNIT |
| PB | PULL BOX |
| PBU | POLYMER BLEND UNIT |
| PBD | PANELBOARD |
| PCP | PROGRESSING CAVITY PUMP |
| PCV | PRESSURE CONTROL VALVE |
| PDCV | PRESSURE DIFFERENTIAL CONTROL VALVE |
| PEJ | PNEUMATIC EJECTOR |
| PLC | PROGRAMMABLE LOGIC CONTROLLER |
| PMP | PUMP |
| PNL | PANEL |
| POP | PNEUMATIC OPERATOR |
| PPS | PERFORATED PLATE SCREEN |
| PRV | PRESSURE REDUCING VALVE |
| PSC | SCREW PUMP |
| PSV | PRESSURE SAFETY VALVE |
| PVL | PRESSURE VESSEL |
| RDT | ROTARY DRUM THICKENER |
| REC | RECEIVER |
| SBP | SUBMERSIBLE PUMP |
| SCL | SCALE |
| SCN | SCREEN |
| SCR | SCRUBBER |
| SEP | SEPARATOR |
| SG | SLUICE GATE |
| SKM | SKIMMER |
| SLC | SLUDGE COLLECTOR |
| SLG | SLIDE GATE |
| SLR | SILENCER |
| SMP | SAMPLER |
| ST | SURGE TANK |
| STP | SOUND TRAP |
| STR | STRAINER |
| SUB | SUBSTATION |
| SV | SOLENOID VALVE |
| SWBD | SWITCHBOARD |
| SWGR | SWITCHGEAR |
| T | TANK/TRERMOSTAT |
| TB | TERMINAL BOX |
| TBN | TURBINE |
| TBP | TURBINE PUMP |
| TCV | TEMPERATURE CONTROL VALVE |
| TEL | TELEPHONE EQUIPMENT |
| TFR | TRANSFORMER |
| TM | TIMER |
| TRS | TRANSFER SWITCH |
| UH | UNIT HEATER |
| US | UTILITY STATION |
| UV | MULTI–VARIABLE (U) CONTROLLED VALVE |
| VAL | VALVE |
| VAP | VACUUM PUMP |
| VAV | VARIABLE AIR VOLUME TERMINAL UNIT |
| VEN | VENTILATOR |
| VFC | VARIABLE FREQUENCY CONTROLLER |
| VFD | VARIABLE FREQUENCY DRIVE |
| VGR | VORTEX GRIT REMOVAL |
| VIB | VIBRATOR |
| VSC | VARIABLE SPEED CONTROLLER |
| VSD | VARIABLE SPEED DRIVE |
| VTP | VORTEX PUMP |
| WC | WASHER COMPACTOR |
| XXX | GENERAL |
| YV | EVENT (Y) CONTROLLED VALVE |

# NOTES

1. SHEET 00G005 IS GENERAL IN NATURE. SOME DESIGNATIONS SHOWN HEREIN MAY NOT BE USED ON THESE CONTRACT PLANS.
2. SEE SHEET 00G003 FOR GENERAL ABBREVIATIONS.
3. EXISTING PIPING IS DESIGNATED BY SERVICE WITHOUT IMPLICATION AS TO PIPING MATERIAL. EXISTING PIPING MATERIAL, IF KNOWN, IS INDICATED SEPARATELY, AND MAY NOT BE THE SAME MATERIAL AS SPECIFIED FOR NEW PIPING FOR THE SAME SERVICE.
4. VALVE DESIGNATIONS APPLY TO MANUALLY OPERATED VALVES AND CHECK VALVES AND ARE NOT NECESSARILY USED FOR ALL SIZES.
5. EQUIPMENT NUMBER PREFIXES ARE FOR REFERENCE ONLY. NOT ALL EQUIPMENT NUMBER PREFIXES ARE USED IN THESE CONTRACT PLANS.

FILE: 215786–00G005.dwg
DATE: Oct. 07, 2015–4:26:08pm, rsnider

HDR Engineering, Inc.

| ISSUE | DATE | DESCRIPTION |
|---|---|---|
| A | JUNE 2015 | ISSUED FOR BID |

| | |
|---|---|
| PROJECT MANAGER | C. OLSON |
| DESIGNED | R. NATOLI |
| DESIGNED | |
| CHECKED | C. OLSON |
| DRAWN | B.DOWN |
| DATE | JUNE 30, 2015 |
| PROJECT NUMBER | ~~215786~~ |

REGISTERED PROFESSIONAL ENGINEER
CRAIG A. OLSON
NO. 39819
EXP. 12/31/15
CIVIL
STATE OF CALIFORNIA
06-30-15

CITY OF PINOLE CALIFORNIA 1903

PINOLE/HERCULES
WATER POLLUTION
CONTROL PLANT UPGRADE
CLIENT PN

**GENERAL**

**DESIGNATION SYSTEM**

0 1" 2"

| | |
|---|---|
| FILENAME | 215786–00G005 |
| SCALE | NONE |
| SHEET | 00G005 |

## PIPING SYSTEMS SCHEDULE AND ABBREVIATIONS

| ABBREV | SERVICE |
|---|---|
| 1W | NO 1 WATER |
| 2W | NO 2 WATER |
| 3W | NO 3 WATER (CHLORINATED EFFLUENT) |
| 4W | NO 4 WATER (DECHLORINATED EFFLUENT) |
| AA | AERATION AIR |
| ABI | AERATION BASIN INFLUENT |
| CEN | CENTRATE |
| D | DRAIN |
| DS | DIGESTED SLUDGE |
| FA | FOUL AIR |
| FCL | FERRIC CHLORIDE |
| FE | FINAL EFFLUENT |
| GR | GRIT |
| GRO | GRIT OVERFLOW |
| GTO | GRAVITY THICKENER OVERFLOW |
| GTSL | GRAVITY THICKENED SLUDGE |
| HPA | HIGH PRESSURE AIR |
| IS | INFLUENT SEWER |
| LPA | LOW PRESSURE AIR |
| LSG | LOW PRESSURE SLUDGE GAS |
| ML | MIXED LIQUOR |
| NG | NATURAL GAS |
| OF | OVERFLOW |
| PB | PRIMARY BYPASS |
| PD | PLANT DRAIN |
| PE | PRIMARY EFFLUENT |
| PI | PRIMARY INFLUENT |
| POLY | POLYMER (SOLUTION) |
| PSC | PRIMARY SCUM |
| PSL | PRIMARY SLUDGE |
| RAS | RETURN ACTIVATED SLUDGE |
| RS | RAW SEWAGE |
| SAM | SAMPLE |
| SBS | SODIUM BISULFITE |
| SC | SCUM |
| SE | SECONDARY EFFLUENT |
| SHC | SODIUM HYPOCHLORITE |
| SHO | SODIUM HYDROXIDE |
| SS | SANITARY SEWER |
| STD | STORM DRAIN |
| SW | SEAL WATER |
| TS | THICKENED SLUDGE |
| TSC | THICKENER SCUM |
| V | VENT |
| VTR | VENT THROUGH ROOF |
| WAS | WASTE ACTIVATED SLUDGE |

| SERVICE | |
|---|---|
| B | BURIED |
| C | CONCRETE ENCASED |
| E | EXPOSED |
| S | SUBMERGED |

| PIPE MATERIAL TYPE ABBREVIATION | |
|---|---|
| BS | BLACK STEEL |
| CISP | CASIT IRON SOIL PIPE |
| CML/C | CEMENT MORTAR LINED & COATED |
| CMP | CORRUGATED METAL PIPE |
| CU | COPPER (TUBING) |
| DI | DUCTILE IRON |
| FS | FABRICATED STEEL |
| FRP | FIBERGLASS REINFORCED PLASTIC |
| GS | GALVANIZED STEEL |
| PE | POLYETHYLENE |
| PVC | POLYVINYL CHLORIDE |
| RB | RED BRASS |
| RCP | REINFORCED CONCRETE PIPE |
| SST | STAINLESS STEEL |
| WS | WELDED STEEL |

## IDENTIFICATION SYMBOLOGY

PIPING




NOTE: SEE SPECIFICATION SECTION 15060 FOR PIPING SYSTEM MATERIALS.

FILE: 215786-00G006.dwg
DATE: Oct 07, 2015-4:26:14pm, rsnider

HDR Engineering, Inc.

| ISSUE | DATE | DESCRIPTION |
|---|---|---|
| A | JUNE 2015 | ISSUED FOR BID |

| | |
|---|---|
| PROJECT MANAGER | C. OLSON |
| DESIGNED | R. NATOLI |
| DESIGNED | |
| CHECKED | C. OLSON |
| DRAWN | B. DOWN |
| DATE | JUNE 30, 2015 |
| PROJECT NUMBER | ~~215786~~ |

REGISTERED PROFESSIONAL ENGINEER
CRAIG A. OLSON
NO. 39819
EXP. 12/31/15
CIVIL
STATE OF CALIFORNIA
09-30-15

CITY OF PINOLE CALIFORNIA 1903

PINOLE/HERCULES
WATER POLLUTION
CONTROL PLANT UPGRADE
CLIENT PN

**GENERAL**

**PIPING SYSTEMS SCHEDULE AND ABBREVIATIONS**

0 1" 2"

| | |
|---|---|
| FILENAME | 215786-00G006 |
| SCALE | NONE |

SHEET **00G006**

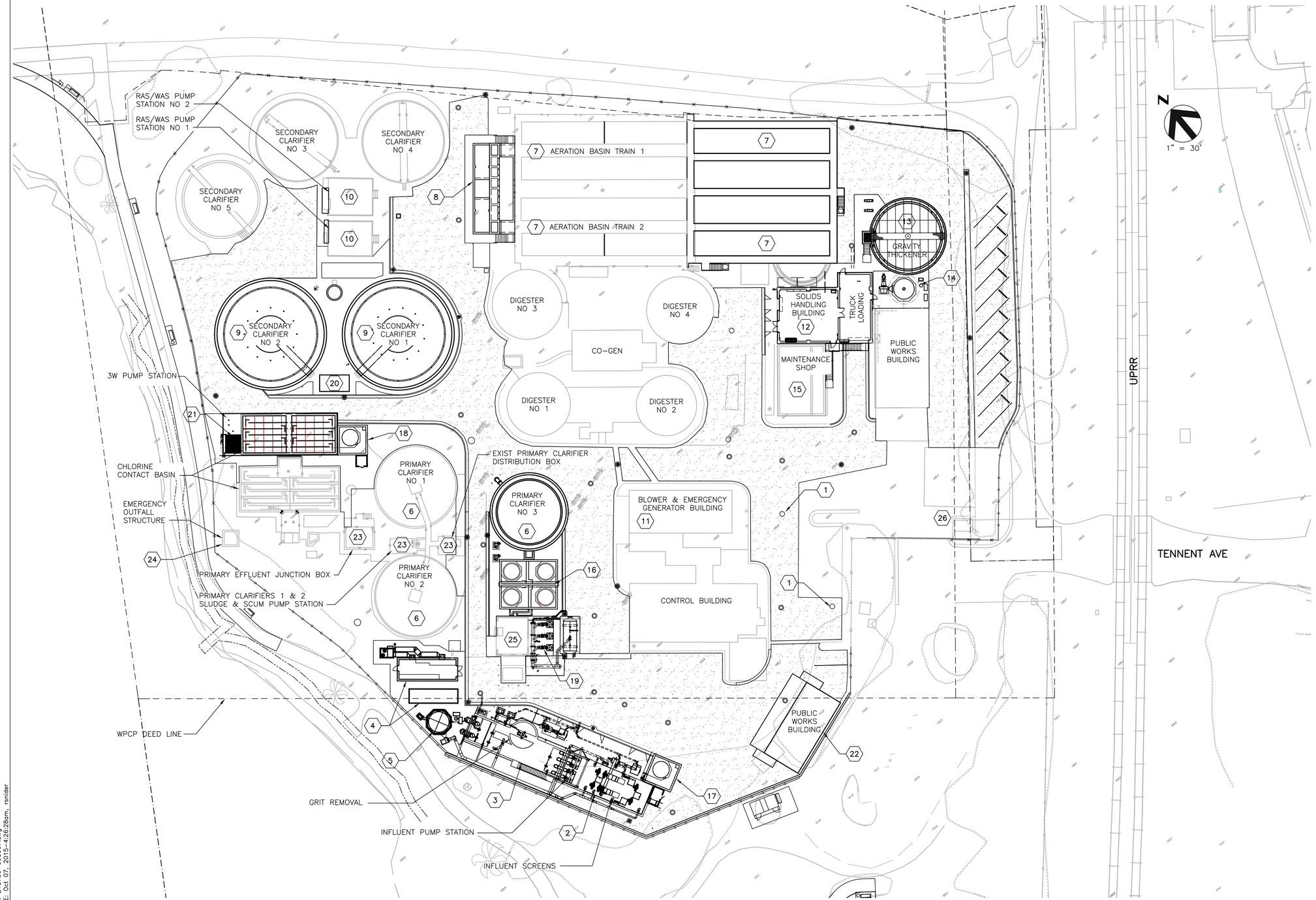


## KEY NOTES:

1. INFUENT FLOW MEASURMENT 1100 SERIES
2. HEADWORKS 1200 SERIES
3. GRIT REMOVAL 1300 SERIES
4. ELECTRICAL BUILDING/GENERATOR 1400 SERIES
5. ODOR CONTROL, HEADWORKS 1500 SERIES
6. PRIMARY CLARIFIERS 2100 SERIES
7. AERATION BASINS 3100 SERIES
8. PRIMARY EFFLUENT AND MIXED LIQUOR FLOW SPLIT BOX – 3200 SERIES
9. SECONDARY CLARIFIERS 4100 SERIES
10. RAS/WAS PUMP STATIONS 1 & 2 4200 SERIES
11. BLOWER & EMERGENCY GENERATOR BUILDING 5100 SERIES
12. SOLIDS HANDLING BUILDING 6100 & 6200 SERIES
13. GRAVITY SOLIDS THICKENER 6400 SERIES
14. ODOR CONTROL, SOLIDS HANDLING 6300 SERIES
15. MAINTENANCE SHOP 6600 SERIES
16. SODIUM HYPOCHLORITE/BISULFITE CHEMICAL STORAGE – 7500 SERIES
17. FERRIC CHLORIDE CHEMICAL STORAGE AND FEED– 7600 SERIES
18. SODIUM HYDROXIDE CHEMICAL STORAGE AND FEED – 7700 SERIES
19. EFFLUENT PUMPING STATION 9100 SERIES
20. DIGESTER GAS BURNER 8500 SERIES
21. CHLORINE CONTACT BASIN 7100 SERIES
22. PUBLIC WORKS BUILDING 0100 SERIES
23. PRIMARY FLOW DISTRIBUTION 2200 SERIES
24. EMERGENCY OUTFALL STRUCTURE 7300 SERIES
25. CHEMICAL FEED/EMERGENCY GENERATOR BUILDING – 9100 SERIES
26. FUEL DISPERSING STATION

FILE: 215786-000007.dwg
DATE: Oct 07, 2015-4:26:28am, rsnider

HDR Engineering, Inc.

| ISSUE | DATE | DESCRIPTION |
|---|---|---|
| A | JUNE 2015 | ISSUED FOR BID |

| | |
|---|---|
| PROJECT MANAGER | C. OLSON |
| DESIGNED | R. NATOLI |
| DESIGNED | |
| CHECKED | C. OLSON |
| DRAWN | B. DOWN |
| DATE | JUNE 30, 2015 |
| PROJECT NUMBER | 215786 |

REGISTERED PROFESSIONAL ENGINEER
CRAIG A. OLSON
NO. 39819
EXP. 12/31/15
CIVIL
STATE OF CALIFORNIA
06-30-15

CITY OF PINOLE CALIFORNIA 1903

PINOLE/HERCULES
WATER POLLUTION
CONTROL PLANT UPGRADE
CLIENT PN

**GENERAL**

**OVERALL SITE KEY PLAN**

0 1" 2"

| | |
|---|---|
| FILENAME | 215786-00G007 |
| SCALE | AS NOTED |

SHEET **00G007**

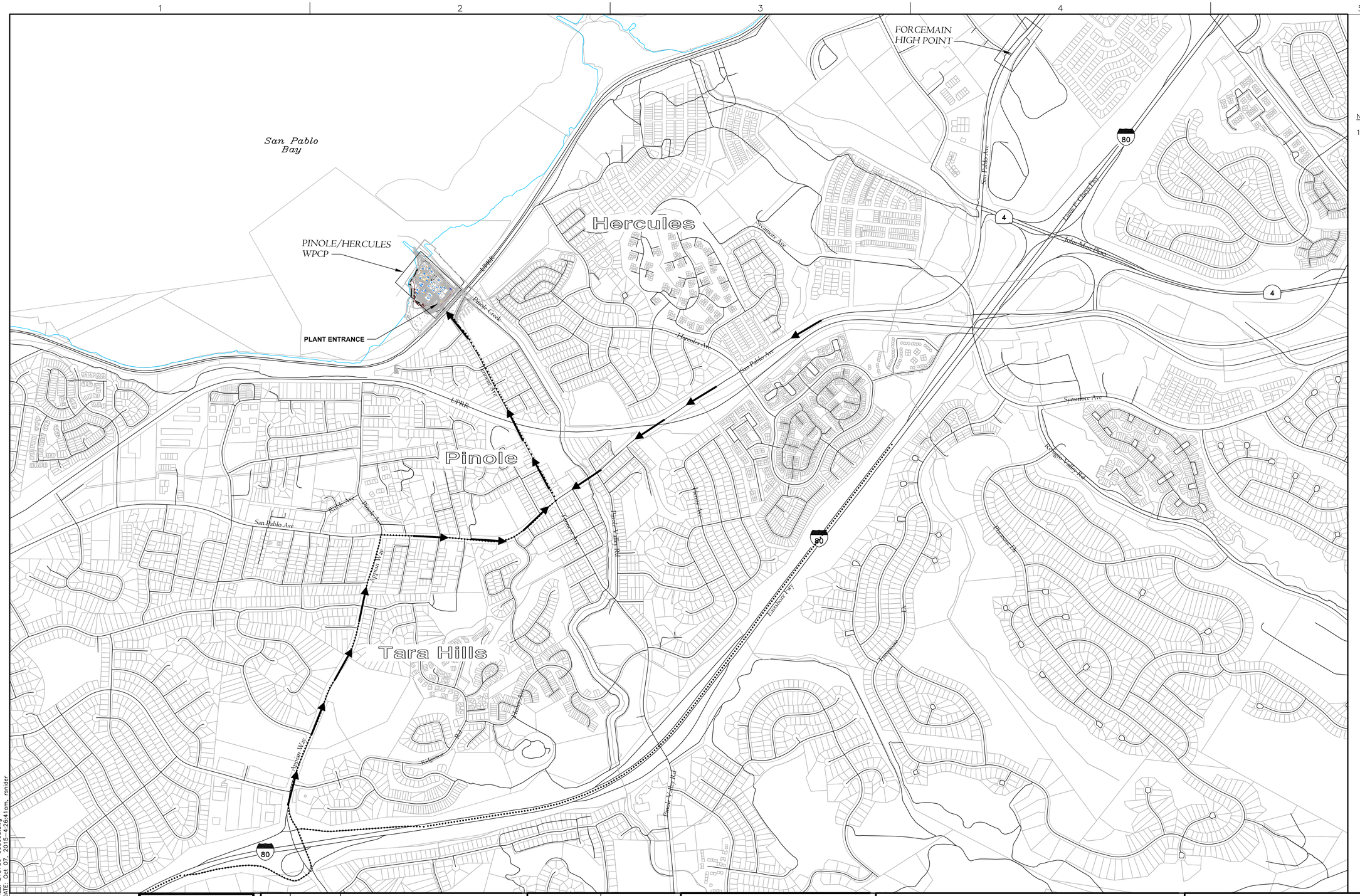


NOTES:

1. NO CONSTRUCTION ACCESS ALLOWED ON PINOLE VALLEY ROAD.

FILE: 215786-00G008.dwg
DATE: Oct 07, 2015 - 4:26:41pm, rsnider

HDR Engineering, Inc.

| ISSUE | DATE | DESCRIPTION |
|---|---|---|
| A | JUNE 2015 | ISSUED FOR BID |

| | |
|---|---|
| PROJECT MANAGER | C. OLSON |
| DESIGNED | R. NATOLI |
| DESIGNED | |
| CHECKED | C.OLSON |
| DRAWN | B. DOWN |
| DATE | JUNE 30, 2015 |
| PROJECT NUMBER | ~~21578~~6 |

REGISTERED PROFESSIONAL ENGINEER
CRAIG A. OLSON
NO. 39819
EXP. 12/31/15
CIVIL
STATE OF CALIFORNIA
04-30-15

CITY OF PINOLE CALIFORNIA 1903

PINOLE/HERCULES
WATER POLLUTION
CONTROL PLANT UPGRADE
CLIENT PN

# GENERAL

# CONTRACTOR AND TRUCK SITE ACCESS

0 1" 2"

| | |
|---|---|
| FILENAME | 215786-00G008 |
| SCALE | AS NOTED |

SHEET
**00G008**

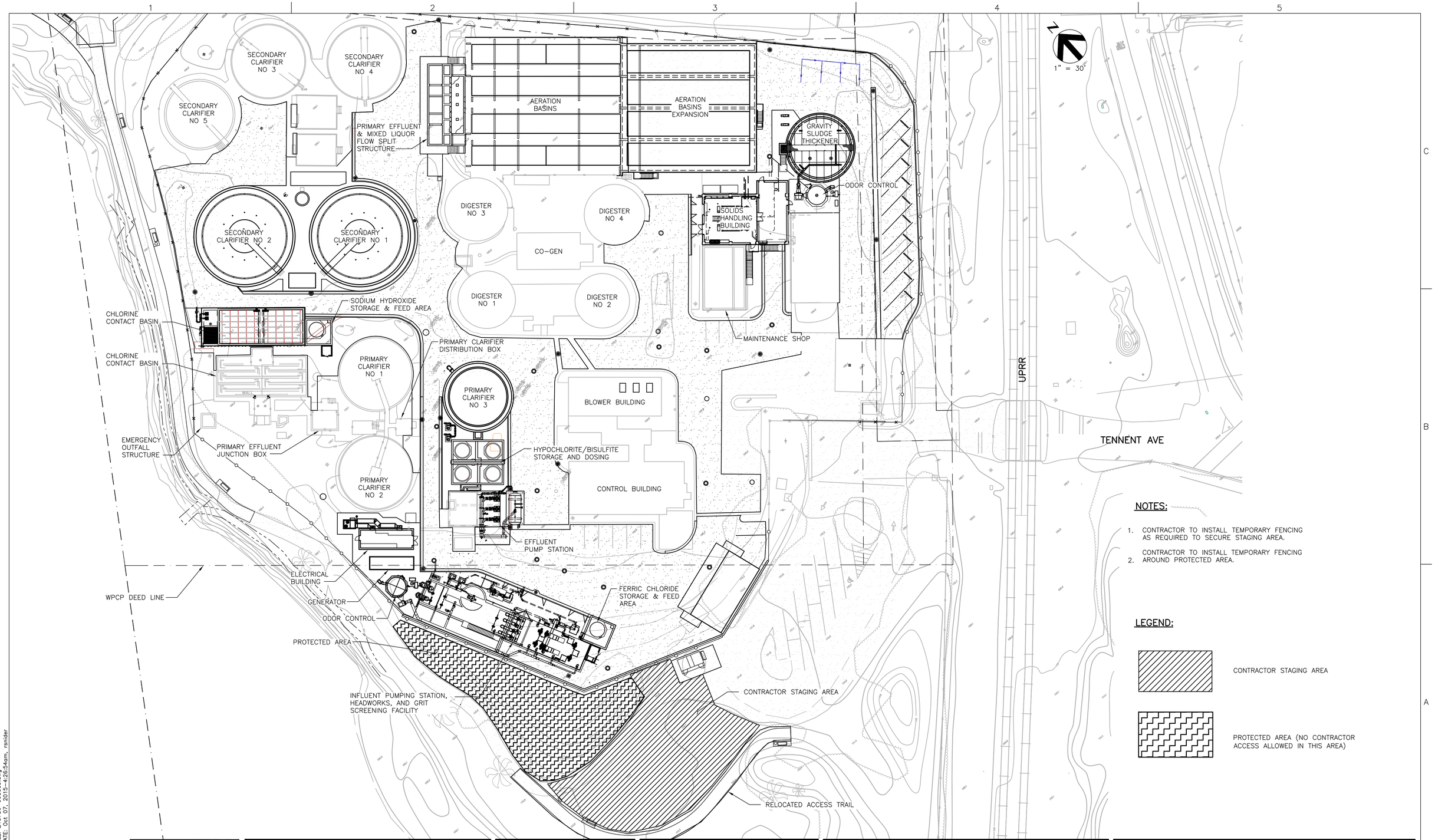


NOTES:

1. CONTRACTOR TO INSTALL TEMPORARY FENCING AS REQUIRED TO SECURE STAGING AREA.
2. CONTRACTOR TO INSTALL TEMPORARY FENCING AROUND PROTECTED AREA.

LEGEND:

CONTRACTOR STAGING AREA

PROTECTED AREA (NO CONTRACTOR ACCESS ALLOWED IN THIS AREA)

FILE: 215786-000009.dwg
DATE: Oct 07, 2015--4:26:54am, rsnider

HDR Engineering, Inc.

| ISSUE | DATE | DESCRIPTION |
|---|---|---|
| A | JUNE 2015 | ISSUED FOR BID |

| | |
|---|---|
| PROJECT MANAGER | C. OLSON |
| DESIGNED | R. NATOLI |
| DESIGNED | |
| CHECKED | C. OLSON |
| DRAWN | B. DOWN |
| DATE | JUNE 30, 2015 |
| PROJECT NUMBER | 215786 |

REGISTERED PROFESSIONAL ENGINEER
CRAIG A. OLSON
NO. 39819
EXP. 12/31/15
CIVIL
STATE OF CALIFORNIA
10-30-15

CITY OF PINOLE CALIFORNIA 1903

PINOLE/HERCULES
WATER POLLUTION
CONTROL PLANT UPGRADE
CLIENT PN

**GENERAL**

**CONTRACTOR STAGING AREA**

0 1" 2"

| | |
|---|---|
| FILENAME | 215786-00G008 |
| SCALE | AS NOTED |

SHEET
**00G009**

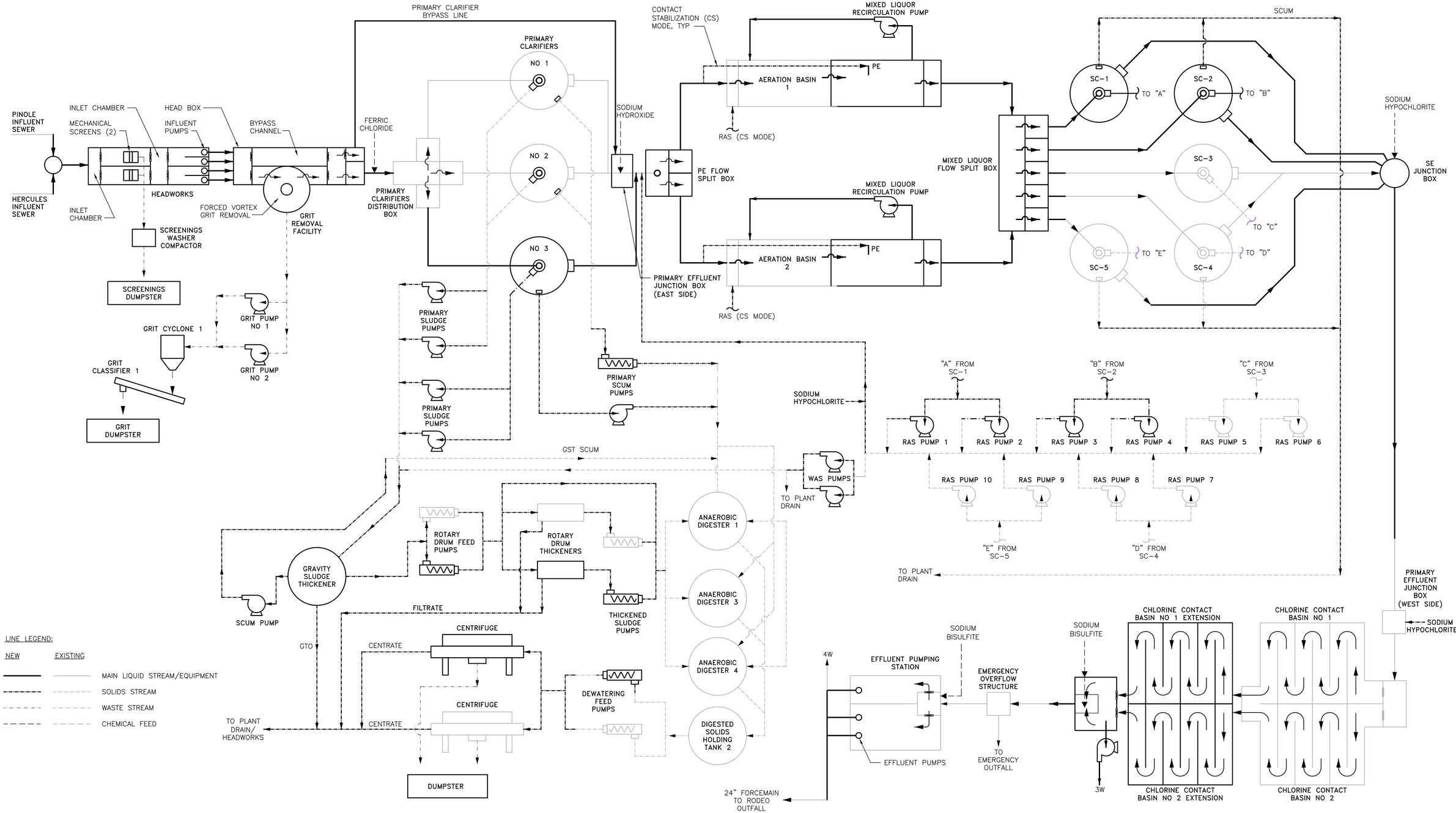


LINE LEGEND:

| NEW | EXISTING | |
|---|---|---|
| ——— | ——— | MAIN LIQUID STREAM/EQUIPMENT |
| —·—·— | —·—·— | SOLIDS STREAM |
| —·—·— | —·—·— | WASTE STREAM |
| – – – – | – – – – | CHEMICAL FEED |

FILE: 215786-000010.dwg
DATE: Oct 07, 2015-4:27:02pm, rsnider

HDR Engineering, Inc.

| ISSUE | DATE | DESCRIPTION |
|---|---|---|
| A | JUNE 2015 | ISSUED FOR BID |

| | |
|---|---|
| PROJECT MANAGER | C. OLSON |
| DESIGNED | R. NATOLI |
| DESIGNED | |
| CHECKED | C. OLSON |
| DRAWN | B. DOWN |
| DATE | JUNE 30, 2015 |
| PROJECT NUMBER | ~~215786~~ |

REGISTERED PROFESSIONAL ENGINEER
CRAIG A. OLSON
NO. 39819
EXP. 12/31/15
CIVIL
STATE OF CALIFORNIA
06-30-15

CITY OF PINOLE CALIFORNIA 1903

PINOLE/HERCULES
WATER POLLUTION
CONTROL PLANT UPGRADE
CLIENT PN

**GENERAL**

**PROCESS FLOW SCHEMATIC**

0 1" 2"

| | |
|---|---|
| FILENAME | 215786-00G010 |
| SCALE | NONE |

SHEET **00G010**

| | |
|---|---|
| **Design Flows** | |
| Avg Dry Weather (ADWF), mgd | 4.06 |
| Maximum Month (MM), mgd | 6.1 |
| Maximum Day (MD), mgd | 11.3 |
| Peak Hour, mgd | 20.0 |
| **Design Influent Loadings** | |
| ADWF Suspended Solids Load. lbs/day | 10,500 |
| ADWF cBOD Load, lbs/day | 10,500 |
| ADWF Ammonia Load, lbs/day | 1,050 |
| ADWF TKN Load, lbs/day | 1,590 |
| MM Suspended Solids Load, lbs/day | 13,300 |
| MM cBOD Load, lbs/day | 12,300 |
| MM Ammonia Load, lbs/day | 1,230 |
| MM TKN Load, lbs/day | 1,870 |
| **Influent Flow Meter** | |
| Type | Parshall |
| No. | 2 |
| Throat Size, Inches | 18 |
| Maximum Capacity, mgd | 10 |
| **Influent Screens** | |
| Mechanical Screen Type | Perforated Plate |
| No. of Screens | 2 |
| Opening Size, mm | 6 |
| Capacity per Screen, mgd | 12 |
| **Influent Pump Station** | |
| Pump Type | Submersible |
| No. of Pumps | 4 (3 duty, 1 standby) |
| Capacity per Pump, mgd | 6.7 |
| TDH, ft | 35 |
| Firm Pumping Capacity, mgd | 20.1 |
| Total Pumping Capacity, mgd | 26.8 |
| Motor Size, HP | 60 |
| Motor Control | VARIABLE SPEED |
| **Grit Removal** | |
| Type | Vortex |
| No of Units | 1 |
| Diameter of Unit, ft | 16 |
| Capacity per Unit, mgd | 20 |
| **Existing Primary Clarifiers (PC 1 and PC 2)** | |
| No. And Diameter | 2@ 45 ft diameter |
| Capacity per Unit, mgd | 4 |
| Side Water Depth, ft | 8.5 |
| Surface Area Each, $ft^2$ | 1,590 |
| MM SOR (GPD/SF) | 1,260 |
| MM Detention Time (hrs) | 1.2 |
| **New Primary Clarifier 3** | |
| No. And Diameter | 1 @ 45 ft diameter |
| Capacity, mgd | 4 |
| Side Water Depth, ft | 14 |
| Surface Area, $ft^2$ | 1,590 |
| MM SOR, GPD/SF | 1,260 |
| MM Detention Time (hrs) | 1.7 |
| **Primary Sludge Pumps (PC 1 and PC 2)** | |
| No. | 2 |
| Type | CENTRIFUGAL, RECESSED IMPELLER |
| Capacity per Pump, gpm | 175 |
| TDH, ft | 65 |
| Motor Size, hp | 10 |
| Motor Control | CONSTANT |
| **Primary Scum Pump (PC1/2)** | |
| No. | 1 |
| Type | PROGRESSIVE CAVITY |
| Capacity per Pump, gpm | 150 |
| TDH | 65 |
| Motor Size, hp | 5 |
| Motor Control | CONSTANT |

| | |
|---|---|
| **Primary Sludge Pumps (PC 3)** | |
| No. | 2 |
| Type | CENTRIFUGAL, RECESSED IMPELLER |
| Capacity per Pump, gpm | 175 |
| TDH, ft | 65 |
| Motor Size, hp | 10 |
| Motor Control | CONSTANT |
| **Primary Scum Pumps (PC 3)** | |
| No. | 1 |
| Type | SUBMERSIBLE, CHOPPER |
| Capacity per Pump, gpm | 150 |
| TDH | 65 |
| Motor Size, hp | 5 |
| Motor Control | CONSTANT |
| **Aeration Basins** | |
| No. of Trains | 2 |
| Aeration Train Dimensions | |
| Length, ft | 190 |
| Width, ft | 42 |
| Side Water Depth, ft | 14.7 |
| Volume per Train, MG | 0.8 |
| Nitrification/Denitrification Mode | |
| Aerobic Solids Residence Time, days | 6.5 |
| Approximate MM MLSS Concentration, mg/L | 3,500 |
| Mixed Liquor Recirculation Pump | |
| Type | PROPELLER |
| No. per Train | 1 |
| MM Flow Rate, gpm | 6,300 |
| Motor Size per Unit, HP | 5 |
| Motor Control | VARIABLE SPEED |
| Contact Stabilization Mode | |
| Initiation Flow Set Point, mgd | 9.0 |
| Approximate MLSS Concentration, mg/L | 1,500 |
| **Aeration Blowers** | |
| Number | 3 |
| Type | HIGH SPEED TURBO |
| Capacity per Unit, scfm | 4,000 |
| Discharge Pressure, psig | 8.5 |
| Motor Size per Unit, HP | 200 |
| Motor Control | VARIABLE SPEED |
| **New Secondary Clarifiers (SC 1 and SC 2)** | |
| No. and Diameter | 2 @ 65 ft |
| Side Water Depth, ft | 18 |
| Surface Area per Clarifier, $ft^2$ | 3,318 |
| Volume per Clarifier, MG | 0.45 |
| Maximum Return Rate per Clarifier, MGD | 3.0 |
| Surface Overflow Rate at MM, $gpd/ft^2$ | 542 |
| Solids Loading Rate at MM (50% RAS Rate, All Clarifiers in Service), $gpd/ft^2$ | 29 |
| Solids Loading Rate at PH (50% RAS Rate, All Clarifiers in Service), $gpd/ft^2$ | 34 |
| **Ex. Secondary Clarifiers (SC 3 and SC 4)** | |
| No. and Diameter | 2 @ 45 ft |
| Side Water Depth (SC 3 and SC 4), ft | 12 |
| Surface Area per Clarifier, $ft^2$ | 1,590 |
| Volume per Clarifier, MG | 0.14 |
| Maximum Return Rate per Clarifier, MGD | 1.3 |
| Surface Overflow Rate at MM, $gpd/ft^2$ | 503 |
| Solids Loading Rate at MM (50% RAS Rate, All Clarifiers in Service), $gpd/ft^2$ | 22 |
| Solids Loading Rate at PH (48% RAS Rate, All Clarifiers in Service), $gpd/ft^2$ | 31 |
| **Ex. Secondary Clarifier (SC 5)** | |
| No. and Diameter | 1 @ 45 ft |
| Side Water Depth, ft | 18 |
| Surface Area per Clarifier, $ft^2$ | 1,590 |
| Volume per Clarifier, MG | 0.14 |
| Maximum Return Rate per Clarifier, MGD | 1.3 |
| Surface Overflow Rate at MM, $gpd/ft^2$ | 503 |
| Solids Loading Rate at MM (50% RAS Rate, All Clarifiers in Service), $gpd/ft^2$ | 22 |
| Solids Loading Rate at PH (48% RAS Rate, All Clarifiers in Service), $gpd/ft^2$ | 31 |

| | |
|---|---|
| **RAS Pumps (42PMP001, 42PMP002, 42PMP003, 42PMP004)** | |
| No. of Pumps | 4 |
| Type | NON-CLOG CENTRIFUGAL |
| Capacity per Pump, gpm | 1,040 |
| TDH, ft | 20 |
| Motor Size | 10 |
| Motor Control | VARIABLE SPEED |
| **WAS Pumps (42PMP031, 42PMP032)** | |
| No. of Pumps | 2 |
| Type | NON-CLOG CENTRIFUGAL |
| Capacity per Pump, gpm | 75 |
| TDH, ft | 10 |
| Motor Size | 5 |
| Motor Control | CONSTANT |
| **Effluent Disinfection** | |
| Ex. Chlorine Contact Basin | |
| No. of Basins | 2 |
| Side Water Depth | 4.5 |
| Length | 25.7 |
| Width | 29.4 |
| Total Volume, gallons | 46,500 |
| New Chlorine Contact Basin | |
| No. of Basins | 2 |
| Side Water Depth | 15 |
| Length | 27.3 |
| Width | 22.5 |
| Total Volume, gallons | 137,600 |
| No. of Passes | 6 |
| Theoretical Contact Time at MM, minutes | 43.5 |
| Theoretical Contact Time at MD, minutes | 23.5 |
| Theoretical Contact Time at PH, minutes | 13.3 |
| **Effluent Pumping** | |
| No. of Pumps | 3 |
| Type | VERTICAL TURBINE |
| Capacity, mgd | 14.2 |
| TDH, ft | 230 ft |
| Motor Size, hp | 450 |
| Motor Control | VARIABLE SPEED |
| **3W Pumps** | |
| No. of Pumps | 2 |
| Type | VERTICAL TURBINE |
| Capacity, gpm | 400 |
| TDH, ft | 150 |
| Motor Size | 15 |
| Motor Control | VARIABLE SPEED |
| **Ferric Chloride** | |
| No. of Tanks | 1 |
| Tank Volume, gallons | 5,000 |
| No. of Metering Pumps | 3 |
| Metering Pump Type | PERISTALTIC |
| Metering Pump Capacity (2+1), gph | 0-50 |
| Design Dose, mg/L | 1 - 20 mg/L |
| **Sodium Hydroxide** | |
| No. of Tanks | 1 |
| Tank Volume, gallons | 5,000 |
| No. of Metering Pumps | 2 |
| Metering Pump Type | PERISTALTIC |
| Metering Pump Capacity, gph | 0-50 |
| Design Dose, mg/L | 1-40 mg/L |
| **Sodium Hypochlorite** | |
| No. of Tanks | 2 |
| Tank Volume, gallons | 7,000 |
| No. of Metering Pumps | 4 |
| Metering Pump Type | PERISTALTIC |
| Metering Pump Capacity | |
| Disinfection Metering Pumps (1+1), gph | 0-250 |
| Disinfection - RAS Chlorination (1+1), gph | 0-50 |
| Disinfection Dose, mg/L | 15-35 |

| | |
|---|---|
| **Sodium Bisulfite** | |
| No. of Tanks | 2 |
| Tank Volume, gallons | 7,000 |
| No. of Metering Pumps | 3 |
| Metering Pump Type | PERISTALTIC |
| Dechlorination Metering Pumps (1+1), gph | 0-50 |
| Dechlorination Metering Pumps (1), gph | 0-250 |
| Design Dose, mg/L | 8-20 |
| **Solids Handling Facilities** | |
| ADWF Sludge Loads | |
| Primary, lbs/day | 3,180 |
| WAS, lbs/day | 2,500 |
| MM Sludge Loads | |
| Primary, lbs/day | 9,970 |
| WAS, lbs/day | 4,260 |
| **Gravity Sludge Thickener** | |
| No. and Diameter | 1@ 40 ft |
| Surface Area, $ft^2$ | 1,257 |
| Side Water Depth | 8 |
| Volume, MG | 75,200 |
| MM Solids Loading Rate, lbs/day/ft2 | 11.3 |
| **Primary Scum Pumps (PC 3)** | |
| No. | 1 |
| Type | SUBMERSIBLE, CHOPPER |
| Capacity per Pump, gpm | 150 |
| TDH | 65 |
| Motor Size, hp | 5 |
| Motor Control | CONSTANT |
| **Gravity Thickened Sludge Pumps** | |
| No. | 2 |
| Type | PROGRESSIVE CAVITY |
| Capacity, gpm | 150 |
| TDH, ft | 35 |
| Motor Size, hp | 5 |
| Motor Control | Variable Speed |
| **Rotary Drum Thickener** | |
| No. of Units | 2 |
| Capacity per Unit, gpm | 150 |
| **Thickened Sludge Pumps** | |
| No. of Units | 2 |
| Capacity per Unit, gpm | 50 |
| TDH, ft | 330 |
| Motor Size, hp | 10 |
| Motor Control | VARIABLE SPEED |
| **Solids Dewatering (new unit)** | |
| No. | 1 |
| Capacity per Unit, gpm | 150 |
| Motor Size (Back Drive + Main Drive), hp | 65 |

FILE: 215786-00G011.dwg
DATE: Oct 07, 2015 - 4:27:19am, rsnider

HDR Engineering, Inc.

| ISSUE | DATE | DESCRIPTION |
|---|---|---|
| A | JUNE 2015 | ISSUED FOR BID |

| | |
|---|---|
| PROJECT MANAGER | C. OLSON |
| DESIGNED | R. NATOLI |
| DESIGNED | M. PERINPANAYAGAM |
| CHECKED | C. OLSON |
| DRAWN | B. DOWN |
| DATE | JUNE 30, 2015 |
| PROJECT NUMBER | 215786 |

REGISTERED PROFESSIONAL ENGINEER
CRAIG A. OLSON
NO. 39819
EXP. 12/31/15
CIVIL
STATE OF CALIFORNIA
06-30-15

CITY OF PINOLE CALIFORNIA 1903

PINOLE/HERCULES
WATER POLLUTION
CONTROL PLANT UPGRADE
CLIENT PN

# GENERAL

# DESIGN CRITERIA

0 1" 2"

| | |
|---|---|
| FILENAME | 215786-00G011 |
| SCALE | NONE |
| SHEET | 00G011 |

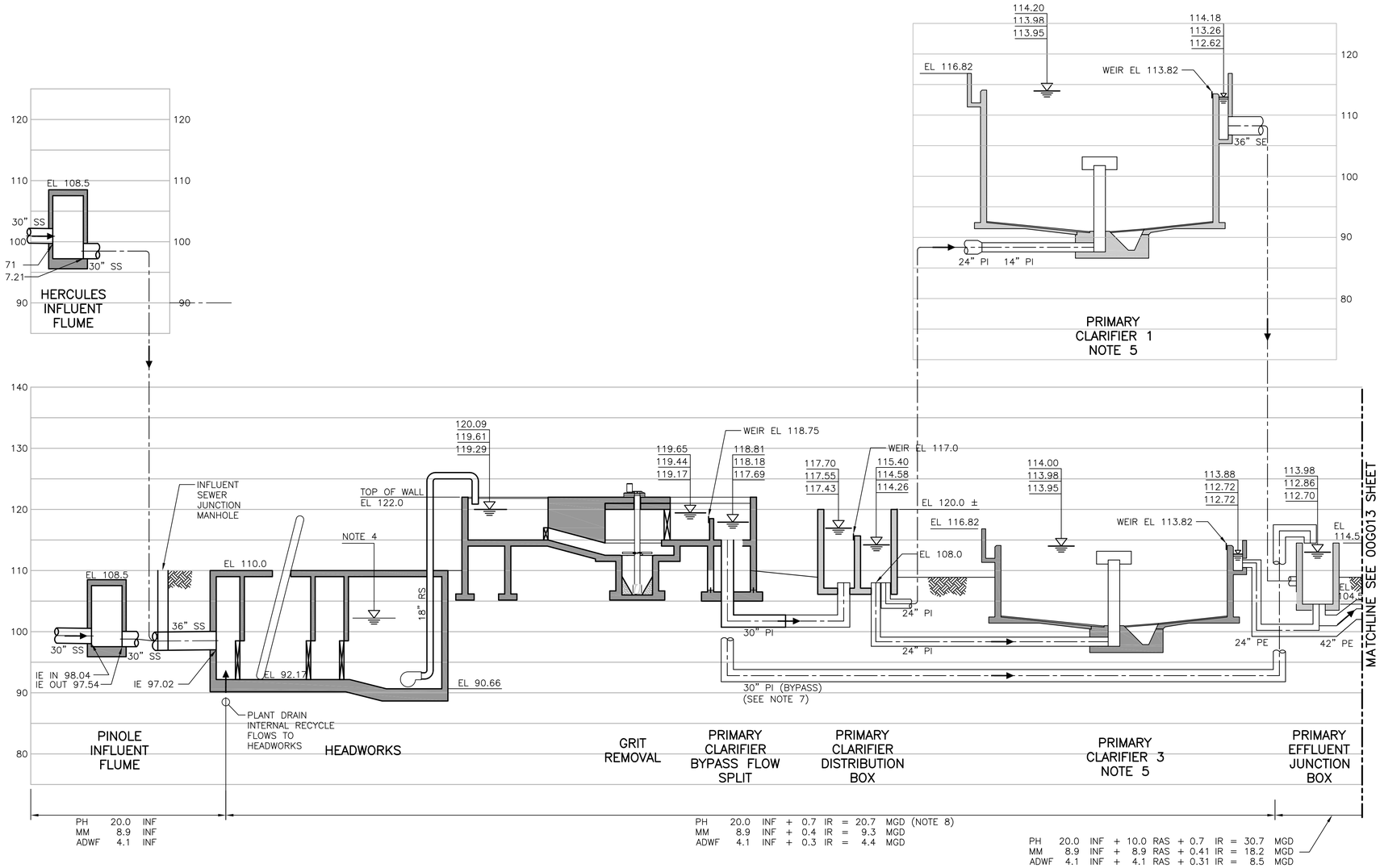


NOTES:

1. ENERGY GRADE LINE ELEVATIONS (IN FEET) ARE SHOWN AS FOLLOWS:
   - PEAK HOUR FLOW (PH)
   - MAXIMUM MONTH FLOW (MM)
   - AVERAGE DRY WEATHER FLOW (ADWF)
2. PROFILE IS BASED ON INFLUENT AND RECYCLE FLOWS (IN MGD) FOR INDICATED FLOW CONDITION.

| | ADWF | MM | PH |
|---|---|---|---|
| INFLUENT (INF) | 4.1 | 8.9 | 20.0 |
| RETURN ACTIVATED SLUDGE (RAS) | 4.1 | 8.9 | 10.0 |
| INTERNAL RECYCLE (IR) | 0.3 | 0.4 | 0.7 |
| MIXED LIQUID RECYCLE (MLR) | 8.2 | 17.8 | 17.8* |

*SEE NOTE 10

3. PROFILE BASED ON THE FOLLOWING NUMBER OF PROCESS UNITS IN SERVICE FOR INDICATED FLOW CONDITION.

| | ADWF | MM | PH |
|---|---|---|---|
| PRIMARY CLARIFIERS | 2 | 3 | 3 |
| AERATION BASINS | 1 | 2 | 2 |
| SECONDARY CLARIFIERS | 4* | 5 | 5 |
| CHLORINE CONTACT BASINS | 1 | 2 | 2 |

*SECONDARY CLARIFIER 1 IS OFFLINE IN HYDRAULIC MODEL IN AVERAGE DRY WEATHER FLOW SCENARIO.

4. WATER SURFACE ELEVATION IN INFLUENT PUMP STATION IS CONTROLLED BY INFLUENT PUMPS.
5. HYDRAULIC PROFILE SHOWN THROUGH PRIMARY CLARIFIER NUMBER 1, WHICH HAS WORST CASE HYDRAULICS OF EXISTING PRIMARY CLARIFIERS AND THROUGH NEW PRIMARY CLARIFIER 3.
6. MAXIMUM EFFLUENT PUMPING CAPACITY IS 14.2 MGD, ALL FLOWS ABOVE 14.2 MGD ARE BYPASSED OUT TO SHALLOW OUTFALL VIA EMERGENCY OUTFALL STRUCTURE.
7. FLOWS ABOVE 12 MGD ARE BYPASSED AROUND THE PRIMARY CLARIFIERS TO THE PRIMARY EFFLUENT JUNCTION BOX FROM THE GRIT EFFLUENT CHANNEL BYPASS FLOWS CONTROLLED VIA OPENING GATE.
8. HYDRAULIC PROFILE SHOWN THROUGH WORST CASE HYDRAULICS EXISTING AND NEW SECONDARY CLARIFIERS.
9. NOTE THAT EXISTING SECONDARY CLARIFIERS 3 AND 4 HAVE A TOP OF CONCRETE ELEVATION OF 112.08.
10. HYDRAULICS FOR NON-CONTACT STABILIZATION MODE SHOWN ON PROFILE FOR ALL FLOW CONDITIONS.

FILE: 215786-000012.dwg
DATE: Oct 07, 2015-4:27:25pm rsnider

HDR Engineering, Inc.

| ISSUE | DATE | DESCRIPTION |
|---|---|---|
| A | JUNE 2015 | ISSUED FOR BID |

| | |
|---|---|
| PROJECT MANAGER | C. OLSON |
| DESIGNED | R. NATOLI |
| DESIGNED | |
| CHECKED | C. OLSON |
| DRAWN | B. DOWN |
| DATE | JUNE 30, 2015 |
| PROJECT NUMBER | ~~215786~~ |

REGISTERED PROFESSIONAL ENGINEER ROBERT G. NATOLI NO. 78271 EXP. 09/30/15 CIVIL STATE OF CALIFORNIA 06-30-15

CITY OF PINOLE CALIFORNIA 1903

PINOLE/HERCULES WATER POLLUTION CONTROL PLANT UPGRADE CLIENT PN

**GENERAL**

**HYDRAULIC PROFILE**

0 1" 2"

| | |
|---|---|
| FILENAME | 215786-00G012 |
| SCALE | NTS |
| SHEET | 00G012 |

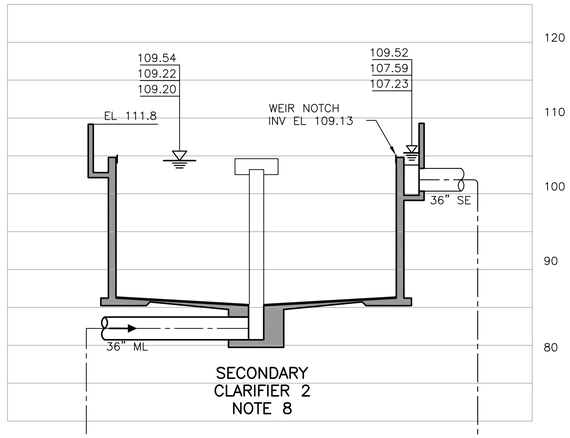


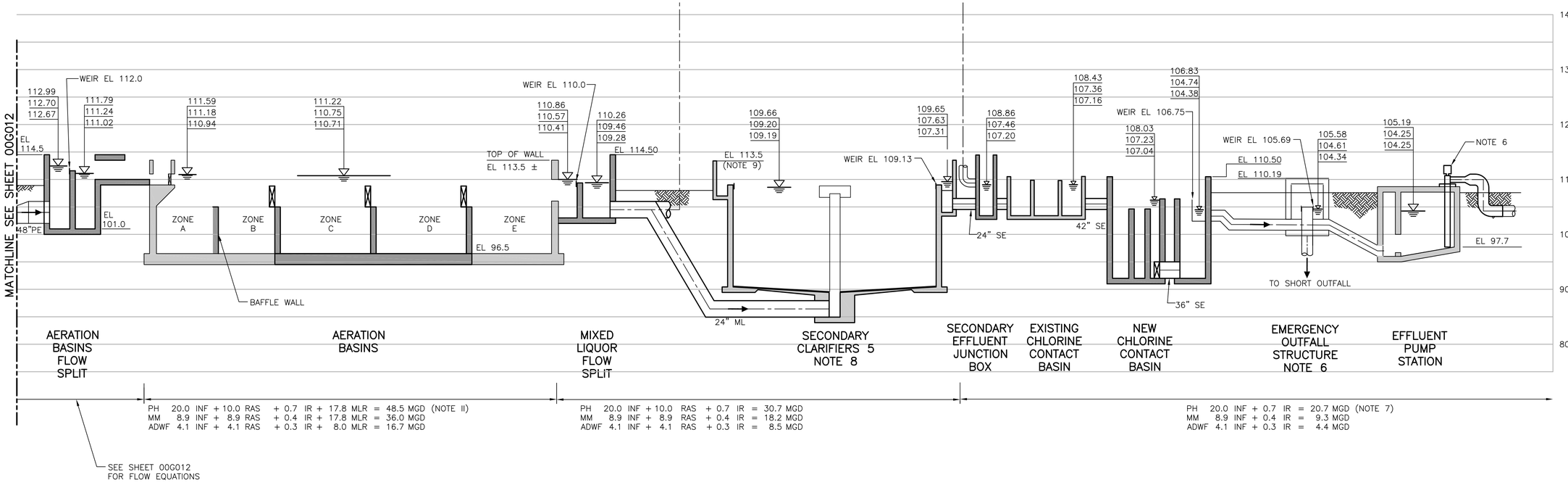


NOTES:

1. SEE SHEET 00G012 FOR HYDRAULIC PROFILE NOTES 1 THROUGH 10.

FILE: 215786-00G013.dwg
DATE: Oct 07, 2015-4:27:31pm, rsnider

HDR Engineering, Inc.

| ISSUE | DATE | DESCRIPTION |
|---|---|---|
| A | JUNE 2015 | ISSUED FOR BID |

| | |
|---|---|
| PROJECT MANAGER | C. OLSON |
| | |
| DESIGNED | R. NATOLI |
| DESIGNED | |
| CHECKED | C. OLSON |
| DRAWN | B. DOWN |
| DATE | JUNE 30, 2015 |
| | |
| PROJECT NUMBER | ~~21578~~6 |

REGISTERED PROFESSIONAL ENGINEER
ROBERT G. NATOLI
NO. 78271
EXP. 09/30/15
CIVIL
STATE OF CALIFORNIA
04-30-15

CITY OF PINOLE CALIFORNIA 1903

PINOLE/HERCULES
WATER POLLUTION
CONTROL PLANT UPGRADE
CLIENT PN

**GENERAL**

**HYDAULIC PROFILE 2**

0 1" 2"

| | |
|---|---|
| FILENAME | 215786-00G013 |
| SCALE | NONE |

SHEET
**00G013**

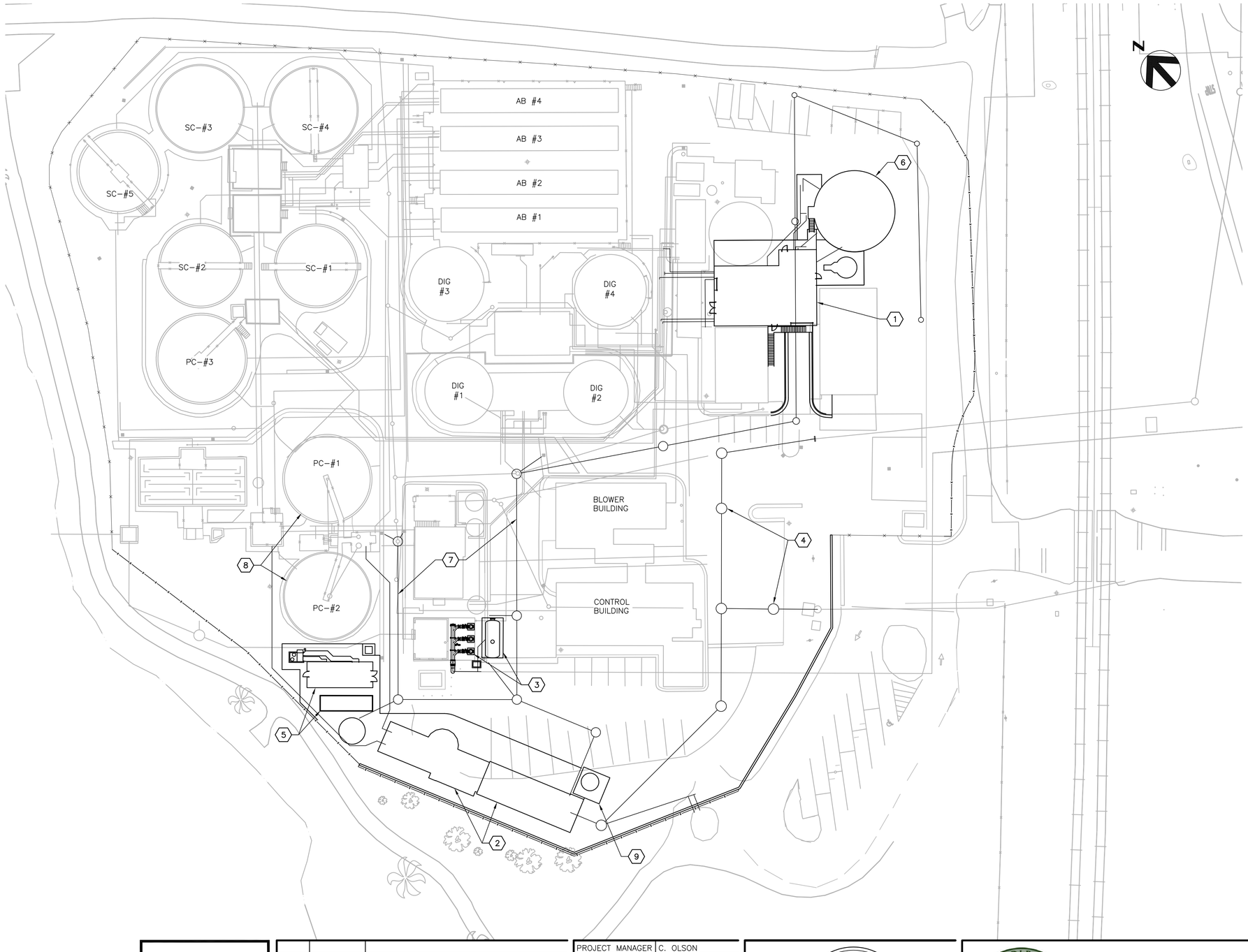


STAGE I GENERAL CONSTRUCTION CONSTRAINT:

1. BYPASS PUMPING, FOR ANY REASON, IS NOT ALLOWED DURING THE WET WEATHER SEASON.
2. NEW GRAVITY THICKENER AND SOLIDS HANDLING BUILDING MUST BE COMPLETE TO ALLOW FOR RELOCATION OF EXISTING SOLIDS MANAGEMENT SYSTEM AND ULTIMATELY CONSTRUCTION OF NEW AERATION BASINS UNDER STAGE II WORK.
3. NEW HEADWORKS FACILITIES INCLUDING BUT NOT LIMITED TO INFLUENT SEWERS, PUMP STATION, SCREENS, GRIT REMOVAL, FERRIC CHLORIDE SYSTEM, PRIMARY INFLUENT PIPING, ELECTRICAL AND CONTROL SYSTEMS AND RETAILING WALL MUST BE COMPLETE AND OPERATIONAL PRIOR TO DEMOLITION OF ANY PORTIONS OF THE SECONDARY SYSTEM.
4. PRIMARY CLARIFIER MECHANISMS IN EXISTING PRIMARY CLARIFIERS NO 1 AND NO 2 MUST BE REPLACED PRIOR TO ADVANCING TO ANY PORTION OF STAGE II WORK.
5. NO FEWER THAN TWO PRIMARY CLARIFIERS MUST BE ON–LINE AND OPERATIONAL AT ALL TIMES.
6. EFFLUENT SURGE TANK AND REPLACEMENT EFFLUENT PUMPS MUST BE ON–LINE AND OPERATIONAL PRIOR TO DEMOLITION WORK REQUIRED TO CONSTRUCT PRIMARY CLARIFIER NO 3 UNDER STAGE II WORK.

MAJOR WORK ITEMS:

1. SOLIDS HANDLING BUILDING.
2. HEADWORKS (INFLUENT PUMPING, GRIT REMOVAL. SCREENINGS AND RETAINING WALL.
3. EFFLUENT PUMPS AND SURGE TANK.
4. INFLUENT SEWER.
5. ELECTRICAL BUILDING AND GENERATOR.
6. GRAVITY SLUDGE THICKENER.
7. SOLIDS AND HEADWORKS AREA DRAINS.
8. PRIMARY CLARIFIER 1 AND 2 MECHANISMS.
9. FERRIC CHLORIDE FACILITIES.

FILE: 215786–00G014.dwg
DATE: Oct 07, 2015–4:27:38pm, rsnider

HDR Engineering, Inc.

| ISSUE | DATE | DESCRIPTION |
|---|---|---|
| A | JUNE 2015 | ISSUED FOR BID |

| | |
|---|---|
| PROJECT MANAGER | C. OLSON |
| DESIGNED | R. NATOLI |
| DESIGNED | J. JETTON |
| CHECKED | C. OLSON |
| DRAWN | B. DOWN |
| DATE | JUNE 30, 2015 |
| PROJECT NUMBER | 215786 |

REGISTERED PROFESSIONAL ENGINEER
CRAIG A. OLSON
NO. 39819
EXP. 12/31/15
CIVIL
STATE OF CALIFORNIA
06-30-15

CITY OF PINOLE CALIFORNIA 1903

PINOLE/HERCULES
WATER POLLUTION
CONTROL PLANT UPGRADE
CLIENT PN

**GENERAL**

**CONSTRUCTION SEQUENCING STAGE I**

0 1" 2"

| FILENAME | 215786–00G014 |
|---|---|
| SCALE | 1" = 30' |

SHEET **00G014**

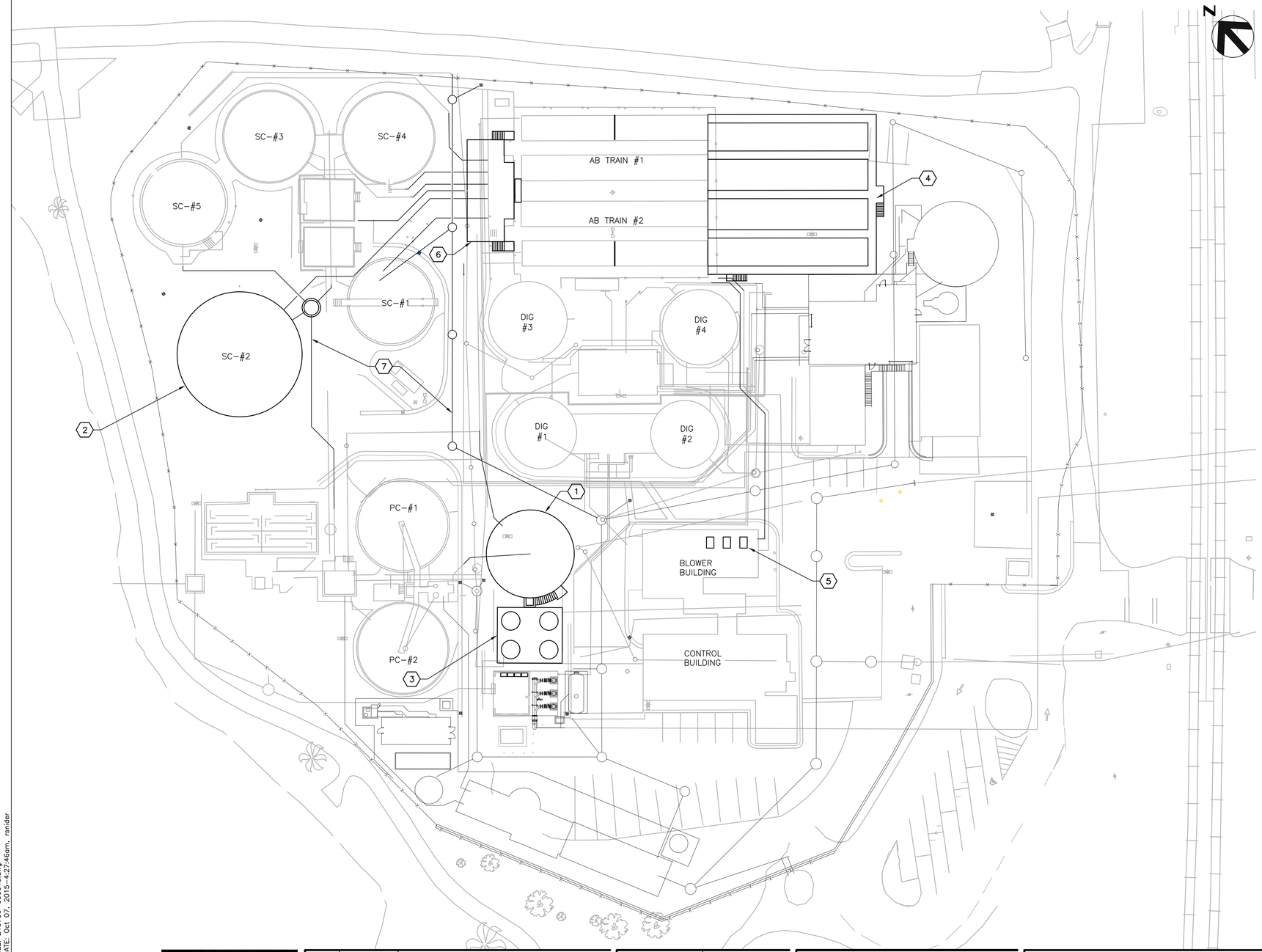


STAGE II GENERAL CONSTRUCTION CONSTRAINTS:

1. BYPASS PUMPING, FOR ANY REASON, IS NOT ALLOWED DURING THE WET WEATHER SEASON.
2. TEMPORARY FACILITIES MUST BE MAINTAINED CONTINUOUSLY FOR BOTH SODIUM HYPOCHLORITE AND SODIUM BISULFITE AT ALL TIMES. BOTH CHEMICALS ARE CRITICAL TO MAINTAINING PERMIT REQUIREMENTS..
3. NO FEWER THAN THREE SECONDARY CLARIFIERS MUST BE ON–LINE AND OPERATIONAL AT ALL TIMES.
4. NO FEWER THAN FOUR AERATION BASINS OF THE CURRENT SIZE MUST BE ON–LINE AND OPERATIONAL AT ALL TIMES. THIS REQUIRES EITHER ALL EXISTING AERATION BASINS OR TWO OF THE EXISTING AND TWO OF THE NEW AERATION BASINS BE ON–LINE AND OPERATIONAL AT ALL TIMES.

MAJOR WORK ITEMS:

1. PRIMARY CLARIFIER 3.
2. SECONDARY CLARIFIER 2.
3. SODIUM HYPOCHLORITE AND BISULFITE CHEMICAL SYSTEMS.
4. AERATION BASIN EXTENSION.
5. BLOWERS.
6. PE/ML SPLITTER BOX.
7. CLARIFIER AREA DRAINS.

HDR Engineering, Inc.

| ISSUE | DATE | DESCRIPTION |
|---|---|---|
| A | JUNE 2015 | ISSUED FOR BID |

| | |
|---|---|
| PROJECT MANAGER | C. OLSON |
| | |
| DESIGNED | R. NATOLI |
| DESIGNED | J. JETTON |
| CHECKED | C. OLSON |
| DRAWN | B. DOWN |
| DATE | JUNE 30, 2015 |
| | |
| PROJECT NUMBER | 215786 |

REGISTERED PROFESSIONAL ENGINEER
CRAIG A. OLSON
NO. 39819
EXP. 12/31/15
CIVIL
STATE OF CALIFORNIA
06-30-15

CITY OF PINOLE CALIFORNIA 1903

PINOLE/HERCULES
WATER POLLUTION
CONTROL PLANT UPGRADE
CLIENT PN

**GENERAL**

**CONSTRUCTION SEQUENCING STAGE II**

0 1" 2"

| | |
|---|---|
| FILENAME | 215786–00G015 |
| SCALE | 1" = 30' |

SHEET **00G015**

FILE: 215786–00G015.dwg
DATE: Oct 07, 2015–4:27:46am, rsnider

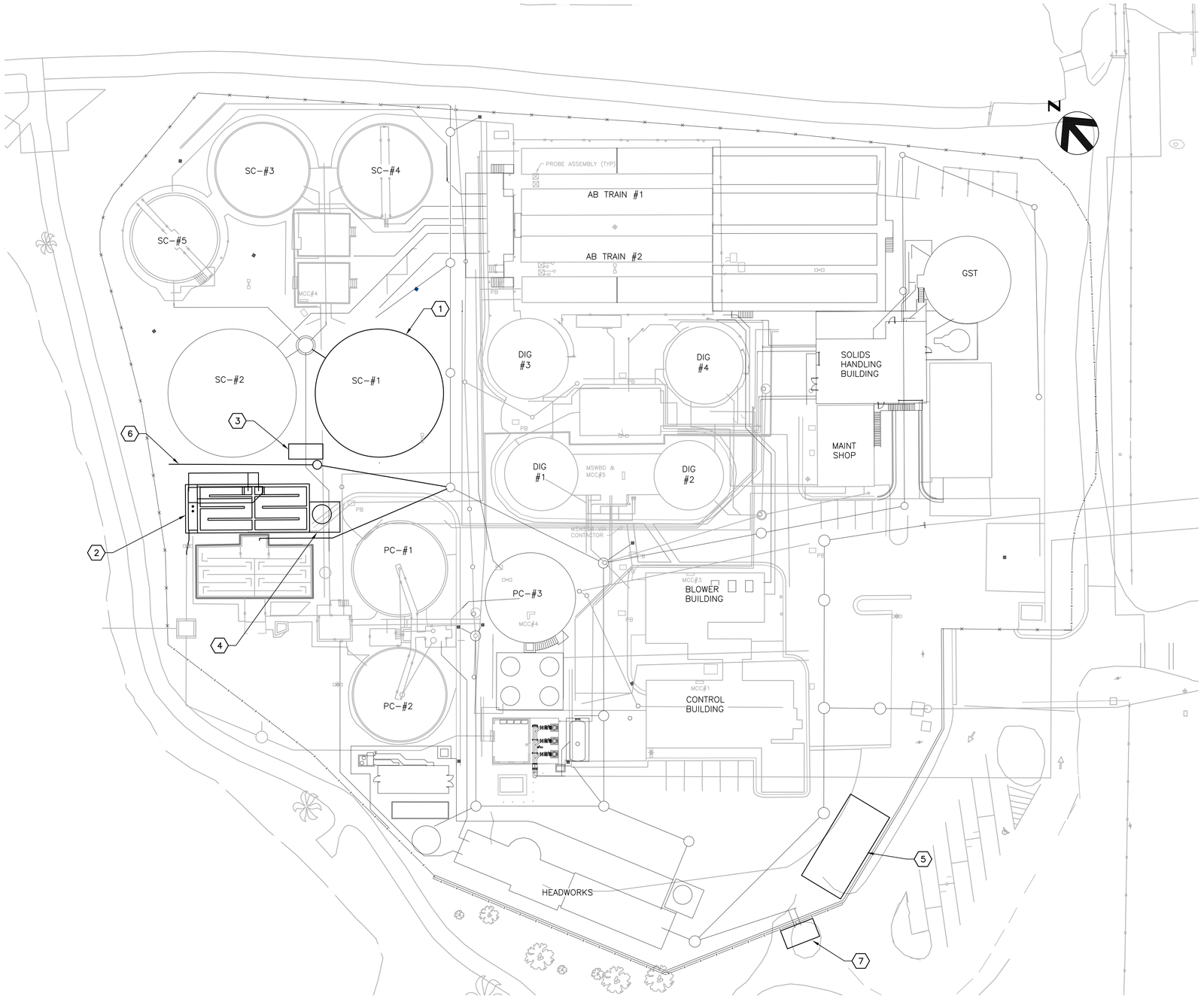


STAGE III GENERAL CONSTRUCTION CONSTRAINTS:

1. BYPASS PUMPING, FOR ANY REASON, IS NOT ALLOWED DURING THE WET WEATHER SEASON.
2. THE ENTIRE EXISTING CHLORINE CONTACT BASIN MUST BE ON–LINE AND OPERATIONAL AT ALL TIMES THROUGHOUT CONSTRUCTION.

MAJOR WORK ITEMS:

1. SECONDARY CLARIFIER 1.
2. CHLORINE CONTACT BASIN.
3. DIGESTER GAS BURNER.
4. SODIUM HYDROXIDE SYSTEM.
5. PUBLIC WORKS BUILDING.
6. CHLORINE CONTACT BASIN AREA DRAINS.
7. RESTROOM FACILITIES.

FILE: 215786–000016.dwg
DATE: Oct 07, 2015–4:27:53pm, rsnider

HDR Engineering, Inc.

| ISSUE | DATE | DESCRIPTION |
|---|---|---|
| A | JUNE 2015 | ISSUED FOR BID |

| | |
|---|---|
| PROJECT MANAGER | C. OLSON |
| DESIGNED | |
| DESIGNED | J. JETTON |
| CHECKED | C. OLSON |
| DRAWN | B. DOWN |
| DATE | JUNE 30, 2015 |
| PROJECT NUMBER | 215786 |

REGISTERED PROFESSIONAL ENGINEER
CRAIG A. OLSON
NO. 39819
EXP. 12/31/15
CIVIL
STATE OF CALIFORNIA
06-30-15

CITY OF PINOLE CALIFORNIA 1903

PINOLE/HERCULES
WATER POLLUTION
CONTROL PLANT UPGRADE
CLIENT PN

**GENERAL**

**CONSTRUCTION SEQUENCING STAGE III**

0 1" 2"

| | |
|---|---|
| FILENAME | 215786–00G016 |
| SCALE | NONE |

SHEET **00G016**

| EXISTING PROJECT DRAWING SETS (NOTE 3) | | | | | | | | |
|---|---|---|---|---|---|---|---|---|
| AREA | SEWAGE TREATMENT WORKS, M. CARLETON YODER, 1955 | WATER POLLUTION CONTROL FACILITIES, YODER TROTTER ORLOB, 1971 | EFFLUENT PUMP STATION & FORCEMAIN TO RODEO, METCALF AND EDDY, 1977 | WASTEWATER TREATMENT PLANT MODIFICATION, METCALF & EDDY, 1978 | WASTEWATER TREATMENT PLANT EXPANSION, METCALF & EDDY, 1983 | SECONDARY CLARIFIER EXPANSION, BROWN & CALDWELL, 2002 | ANAEROBIC DIGESTION IMPROVEMENTS, BROWN & CALDWELL, 2006 | UNDOCUMENTED WORK PERFORMED BY PLANT STAFF (NOTE 4) |
| 12 HEADWORKS<br>66 MAINTENANCE SHOP | ORIGINAL CONSTRUCTION (SEE CONTROL BUILDING SHEETS) | HEADWORKS MODIFICATIONS, SHOP/OFFICE/LAB CONVERTED TO CHLORINE BLDG; CHLORINATOR ROOM & FEED SYSTEM CREATED (SEE CHLORINE BUILDING SHEETS) | N/A | N/A | N/A | N/A | N/A | ADDITION OF FERRIC CHLORIDE AND HYPOCHLORITE STORAGE & FEED SYSTEMS; CONVERSION OF CHLORINE ROOM TO MAINTENANCE SHOP |
| 21<br>PRIMARY CLARIFIERS | ORIGINAL CONSTRUCTION FOR PRIMARY CLARIFIER NO 1 | ORIGINAL CONSTRUCTION FOR PRIMARY CLARIFIER NO 2 | N/A | N/A | ORIGINAL CONSTRUCTION FOR PRIMARY CLARIFIER NO 3 | N/A | N/A | N/A |
| 22<br>PRIMARY CLARIFIER NO 1 & NO 2;<br>23<br>PRIMARY CLARIFIER NO 3 | N/A | ORIGINAL CONSTRUCTION FOR DISTRIBUTION BOX, SCUM AND SLUDGE PUMPING, AND PRIMARY CLARIFIER DIVERSION STRUCTURE (AREA 22) | N/A | N/A | ORIGINAL CONSTRUCTION FOR PRIMARY CLARIFIER NO 3 SCUM AND SLUDGE PUMP STRUCTURE (AREA 23); MODIFICATION OF PRIMARY CLARIFIER DISTRIBUTION BOX (AREA 22) | N/A | N/A | N/A |
| 31<br>AERATION BASINS | N/A | ORIGINAL CONSTRUCTION FOR BASINS 1 & 2 (TRAIN 1) | N/A | N/A | ORIGINAL CONSTRUCTION FOR BASINS 3 & 4 (TRAIN 2) | N/A | N/A | N/A |
| 32<br>SECONDARY CLARIFIER SPLITTER BOX | N/A | N/A | N/A | N/A | ORIGINAL CONSTRUCTION | NOT CONSTRUCTED PER PLANS – SEE 'AS-BUILT' SKETCHES IN SET FOR STRUCTURE MODIFICATION | N/A | N/A |
| 41<br>SECONDARY CLARIFIERS | N/A | ORIGINAL CONSTRUCTION FOR SECONDARY CLARIFIER NO 1 AND NO 2 | N/A | N/A | ORIGINAL CONSTRUCTION FOR SECONDARY CLARIFIER NO 3 AND NO 4 | ORIGINAL CONSTRUCTION FOR SECONDARY CLARIFIER NO 5 | N/A | N/A |
| 42<br>RAS/WAS PUMP STATIONS | N/A | ORIGINAL CONSTRUCTION FOR RAS/WAS PUMP STATION NO 1 | N/A | ADDED FLOWMETERS ON RAS DISCHARGE LINES | ORIGINAL CONSTRUCTION FOR RAS/WAS PUMP STATION NO 2; ADDITION OF WAS PIPING IN RAS/WAS PS NO 1 | NOT CONSTRUCTED PER PLANS – SEE 'AS-BUILT' SKETCHES IN SET FOR PUMP AND PIPING MODIFICATIONS | N/A | N/A |
| 51<br>BLOWER BUILDING | N/A | ORIGINAL CONSTRUCTION | N/A | N/A | AIR FILTRATION MODIFICATIONS | N/A | ELECTRICAL MODIFICATIONS | REMOVAL OF BLOWERS; ADDITION OF CAGED STORAGE AREA |
| 61<br>SOLIDS HANDLING AREA | N/A | ORIGINAL CONSTRUCTION OF SLUDGE THICKENER, GRIT REMOVAL, AND SLUDGE DEWATERING FACILITIES | N/A | N/A | ADDITION OF CENTTRIFUGE AREA, SLUDGE HOPPER, AND ODOR CONTROL SYSTEM | N/A | N/A | VARIOUS SLUDGE PUMP AND PIPING MODIFICATIONS |
| 66<br>POLYMER BUILDING | N/A | N/A | N/A | ORIGINAL CONSTRUCTION (SEE DISSOLVED AIR FLOTATION THICKENER SHEETS) | ADDITION OF FRP COVERS, FOUL AIR DUCTS, COMPRESSOR/CA LINE, AND POLYMER LINES | N/A | N/A | REMOVAL OR ABANDONMENT OF DAFT EQUIPMENT, ADDITION OF POLYMER STORAGE & FEED SYSTEM, ADDITION OF 1W LINE |
| 71<br>CHLORINE CONTACT BASINS | N/A | ORIGINAL CONSTRUCTION OF BASINS AND 3W STSTEM | N/A | N/A | N/A | N/A | N/A | ADDITION OF SODIUM BISULFITE FEED SYSTEM, SAMPLER, AND CHLORINE ANALYZERS IN SHED |
| 73<br>EMERGENCY OUTFALL STRUCTURE (ALL WORK ON PROCESS SHEETS) | ORIGINAL 30" OUTFALL CONTRUCTION | 60" MANHOLE CONSTRUCTED OVER EXISTING OUTFALL, CONSTRUCTION OF 36" EFFLUENT AND STUB (SEE SHEET G-7) | MODIFICATION OF 60" MANHOLE TO CURRENT CONFIGURATION, CONTINUATION OF EFFLUENT LINE (SEE SHEET C-6) | N/A | N/A | N/A | N/A | ADDITION OF SAMPLE PUMPS AND ANALYZER |
| 75<br>CHEMICAL (BISULFITE) STORAGE & FEED | N/A | N/A | N/A | N/A | N/A | N/A | N/A | BISULFITE STORAGE AND PUMPING SYSTEM ADDED BY PLANT STAFF |
| 85<br>DIGESTER GAS BURNER | ORIGINAL CONSTRUCTION NOT IN PLAN SET (SUPERSEDED) | DEMOLITION OF EXISTING FACILITY; CONSTRUCTION OF NEW RELOCATED FACILITY (SUPERSEDED) | N/A | N/A | DEMOLITION OF EXISTING FACILITY; CONSTRUCTION OF NEW RELOCATED FACILITY (SUPERSEDED) | N/A | DEMOLITION OF EXISTING FACILITY; CONSTRUCTION OF CURRENT FACILITY | N/A |
| 91<br>EFFLUENT PUMP STATION | N/A | N/A | ORIGINAL CONSTRUCTION (FOR EFFLUENT LINE HIGH POINT, SEE SHEET C-20) | N/A | N/A | N/A | N/A | ADDITION OF SODIUM BISULFITE FEED SYSTEM, SAMPLER, AND CHLORINE ANALYZERS IN ELECTRICAL/GENERATOR ROOM |

GENERAL DEMOLITION NOTES:

1. SEE SECTION 02072 FOR DEMOLITION, CUTTING AND PATCHING REQUIREMENTS.
2. REFER TO SHEETS 00G014 THROUGH 00G017 FOR CONSTRUCTION SEQUENCING.
3. ONLY EXISTING DRAWING SETS THAT ARE USED AS REFERENCES FOR THIS PROJECT ARE LISTED IN MATRIX. THESE DRAWING SETS ARE AVAILABLE IN PDF FORMAT FROM THE PINOLE WPCP STAFF.
4. WORK DONE BY WPCP STAFF IS BASED ON HDR STAFF OBSERVATION AND CONVERSATIONS WITH PLANT OPERATIONS STAFF. THIS LIST IS NOT COMPREHENSIVE. CONTACT PLANT STAFF FOR MORE INFORMATION.

FILE: 215786-00D001.dwg
DATE: Oct 06, 2015-7:22:55pm, rsnider

HDR Engineering, Inc.

| ISSUE | DATE | DESCRIPTION |
|---|---|---|
| A | JUNE 2015 | ISSUED FOR BID |

| | |
|---|---|
| PROJECT MANAGER | C. OLSON |
| DESIGNED | M. PERINPANAYAGAM |
| DESIGNED | |
| CHECKED | C. OLSON |
| DRAWN | M. FOYLE |
| DATE | JUNE 30, 2015 |
| PROJECT NUMBER | 215786 |

REGISTERED PROFESSIONAL ENGINEER
CRAIG A. OLSON
NO. 39819
EXP. 12/31/15
CIVIL
STATE OF CALIFORNIA
06-30-15

CITY OF PINOLE CALIFORNIA 1903

PINOLE/HERCULES
WATER POLLUTION
CONTROL PLANT UPGRADE
CLIENT PN

**DEMOLITION**

**GENERAL NOTES**

0 1" 2"

| | |
|---|---|
| FILENAME | 215786-00D001 |
| SCALE | AS NOTED |

SHEET **00D001**

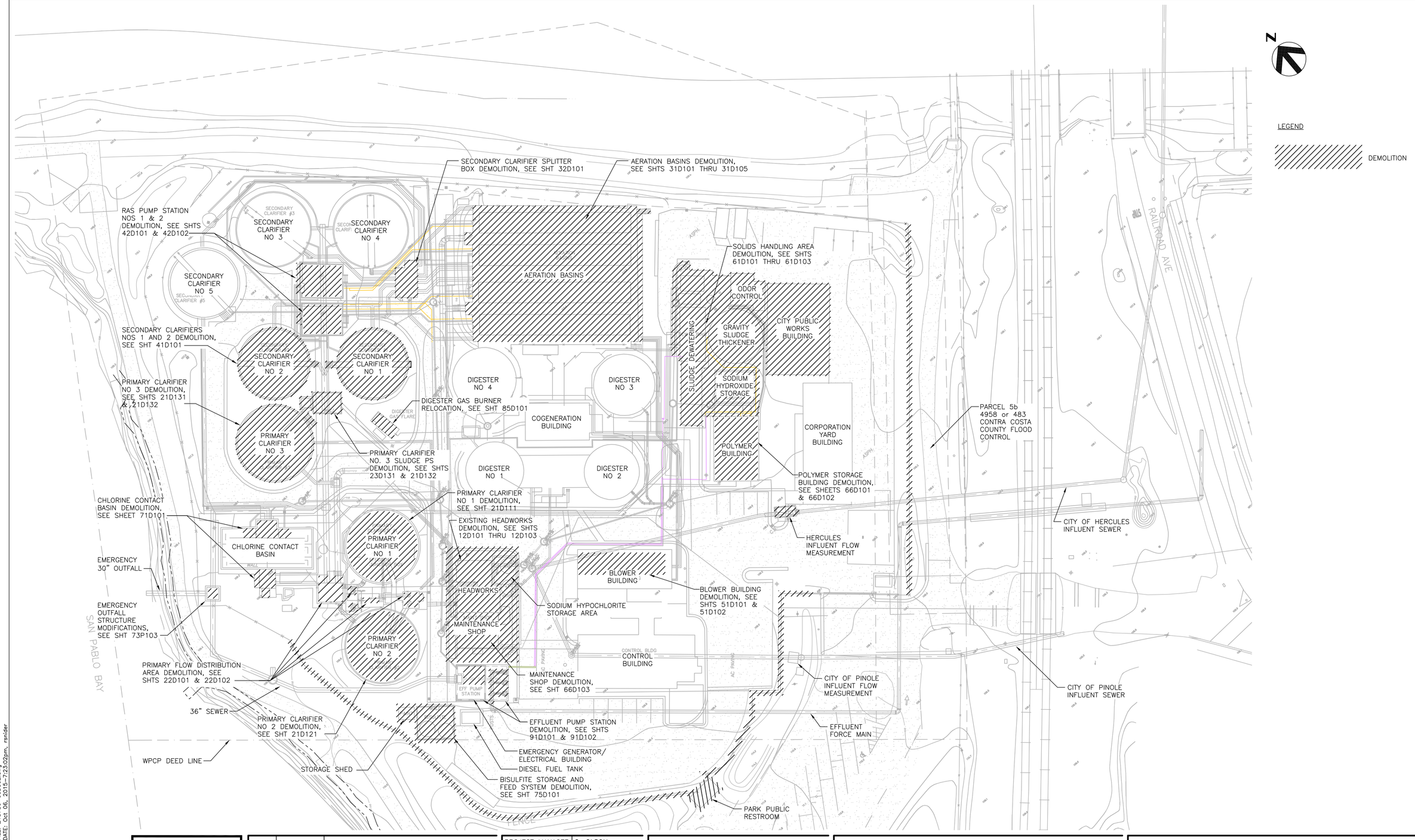


FILE: 215786-00D002.dwg
DATE: Oct 06, 2015-7:23:02pm, rsnider

HDR
HDR Engineering, Inc.

| ISSUE | DATE | DESCRIPTION |
|---|---|---|
| A | JUNE 2015 | ISSUED FOR BID |

| | |
|---|---|
| PROJECT MANAGER | C. OLSON |
| DESIGNED | M. PERINPANAYAGAM |
| DESIGNED | |
| CHECKED | C. OLSON |
| DRAWN | P. VANMEURS |
| DATE | JUNE 30, 2015 |
| PROJECT NUMBER | 215786 |

REGISTERED PROFESSIONAL ENGINEER
CRAIG A. OLSON
NO. 39819
EXP. 12/31/15
CIVIL
STATE OF CALIFORNIA
06-30-15

CITY OF PINOLE CALIFORNIA 1903

PINOLE/HERCULES WATER POLLUTION CONTROL PLANT UPGRADE CLIENT PN

**DEMOLITION**

**OVERALL SITE KEY PLAN**

0 1" 2"

| | |
|---|---|
| FILENAME | 215786-00D002 |
| SCALE | 1" = 30' |

SHEET **00D002**

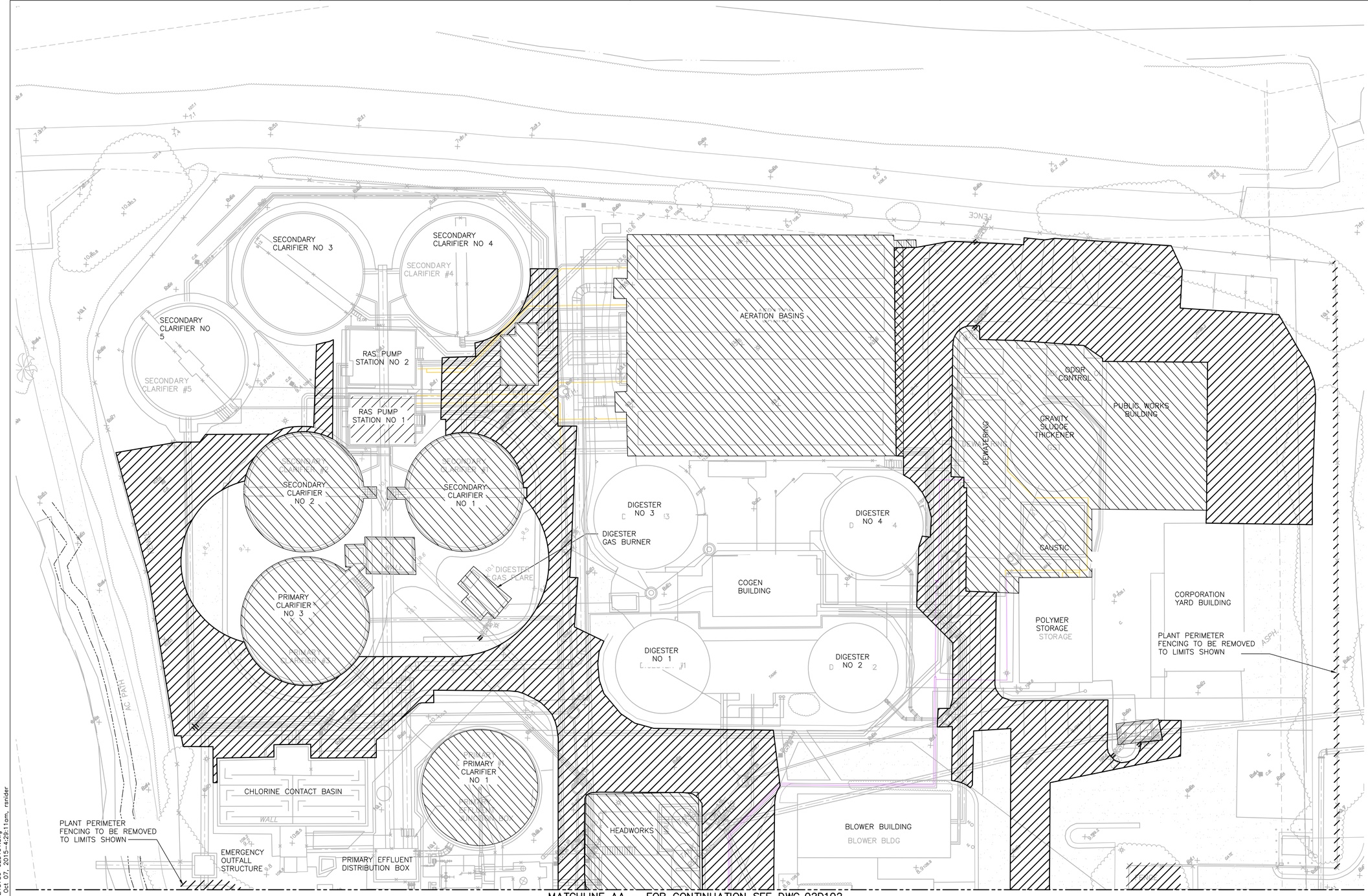


MATCHLINE AA – FOR CONTINUATION SEE DWG 02D102

FILE: 215786-02D101.dwg
DATE: Oct 07, 2015-4:29:11am, renider

HDR Engineering, Inc.

| ISSUE | DATE | DESCRIPTION |
|---|---|---|
| A | JUNE 2015 | ISSUED FOR BID |

| | |
|---|---|
| PROJECT MANAGER | C. OLSON |
| | |
| DESIGNED | M. PERINPANAYAGAM |
| DESIGNED | |
| CHECKED | C. OLSON |
| DRAWN | P. VAN MEURS |
| DATE | JUNE 30, 2015 |
| | |
| PROJECT NUMBER | 215786 |

REGISTERED PROFESSIONAL ENGINEER
CRAIG A. OLSON
NO. 39819
EXP. 12/31/15
CIVIL
STATE OF CALIFORNIA
06-30-15

CITY OF PINOLE CALIFORNIA 1903

PINOLE/HERCULES
WATER POLLUTION
CONTROL PLANT UPGRADE
CLIENT PN

**DEMOLITION**

**PAVING AND GRADING PLAN NORTH PLANT**

0 1" 2"

| | |
|---|---|
| FILENAME | 215786-02D101 |
| SCALE | 1"=20' |

SHEET **02D101**

MATCHLINE AA – FOR CONTINUATION SEE SHT 02D101

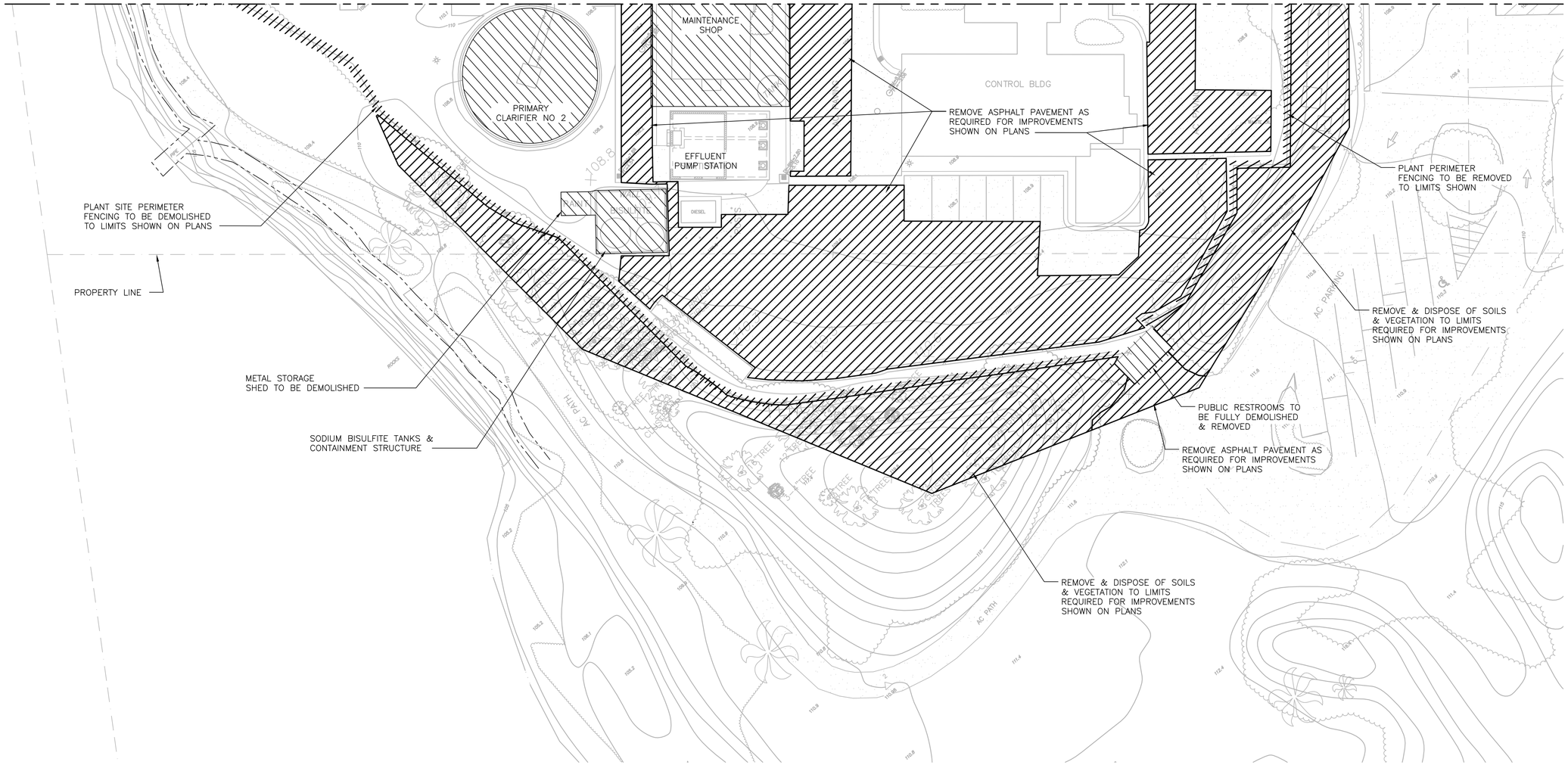


FILE: 215786-02D102.dwg
DATE: Oct 07, 2015-4:29:20am, rsnider

HDR Engineering, Inc.

| ISSUE | DATE | DESCRIPTION |
|---|---|---|
| | | |
| | | |
| | | |
| | | |
| | | |
| | | |
| | | |
| A | JUNE 2015 | ISSUED FOR BID |

| | |
|---|---|
| PROJECT MANAGER | C. OLSON |
| | |
| DESIGNED | M. PERINPANAYAGAM |
| DESIGNED | |
| CHECKED | C. OLSON |
| DRAWN | P. VAN MEURS |
| DATE | JUNE 30, 2015 |
| | |
| PROJECT NUMBER | 215786 |

REGISTERED PROFESSIONAL ENGINEER
CRAIG A. OLSON
NO. 39819
EXP. 12/31/15
CIVIL
STATE OF CALIFORNIA
04-30-15

CITY OF PINOLE CALIFORNIA 1903

PINOLE/HERCULES
WATER POLLUTION
CONTROL PLANT UPGRADE
CLIENT PN

**DEMOLITION**

**PAVING AND GRADING PLAN SOUTH PLANT**

0 1" 2"

| | |
|---|---|
| FILENAME | 215786-02D102 |
| SCALE | 1"=20' |

SHEET **02D102**

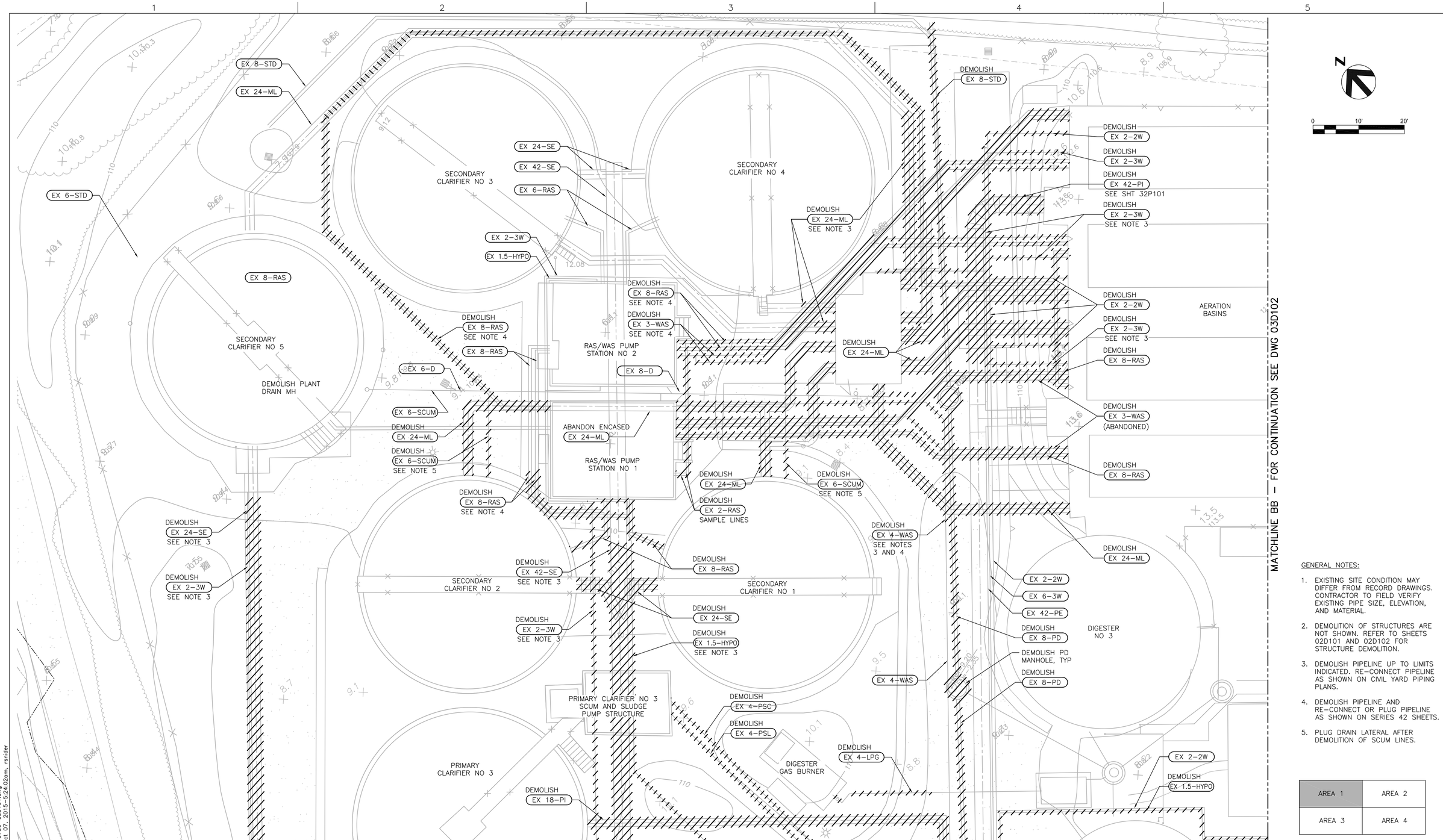


GENERAL NOTES:

1. EXISTING SITE CONDITION MAY DIFFER FROM RECORD DRAWINGS. CONTRACTOR TO FIELD VERIFY EXISTING PIPE SIZE, ELEVATION, AND MATERIAL.
2. DEMOLITION OF STRUCTURES ARE NOT SHOWN. REFER TO SHEETS 02D101 AND 02D102 FOR STRUCTURE DEMOLITION.
3. DEMOLISH PIPELINE UP TO LIMITS INDICATED. RE-CONNECT PIPELINE AS SHOWN ON CIVIL YARD PIPING PLANS.
4. DEMOLISH PIPELINE AND RE-CONNECT OR PLUG PIPELINE AS SHOWN ON SERIES 42 SHEETS.
5. PLUG DRAIN LATERAL AFTER DEMOLITION OF SCUM LINES.

| | |
|---|---|
| AREA 1 | AREA 2 |
| AREA 3 | AREA 4 |

FILE: 215786-03D101.dwg
DATE: Oct 07, 2015-5:24:02am, rsnider

HDR
HDR Engineering, Inc.

| ISSUE | DATE | DESCRIPTION |
|---|---|---|
| A | JUNE 2015 | ISSUED FOR BID |

| | |
|---|---|
| PROJECT MANAGER | C. OLSON |
| DESIGNED | M. PERINPANAYAGAM |
| DESIGNED | |
| CHECKED | C. OLSON |
| DRAWN | M. FOYLE |
| DATE | JUNE 30, 2015 |
| PROJECT NUMBER | 215786 |

REGISTERED PROFESSIONAL ENGINEER
CRAIG A. OLSON
NO. 39819
EXP. 12/31/15
CIVIL
STATE OF CALIFORNIA
06-30-15

CITY OF PINOLE CALIFORNIA 1903

PINOLE/HERCULES
WATER POLLUTION
CONTROL PLANT UPGRADE
CLIENT PN

**DEMOLITION**

**YARD PIPING PLAN**
**AREA 1**

0 1" 2"

| | |
|---|---|
| FILENAME | 215786-03D101 |
| SCALE | 1" = 10' |

SHEET
**03D101**

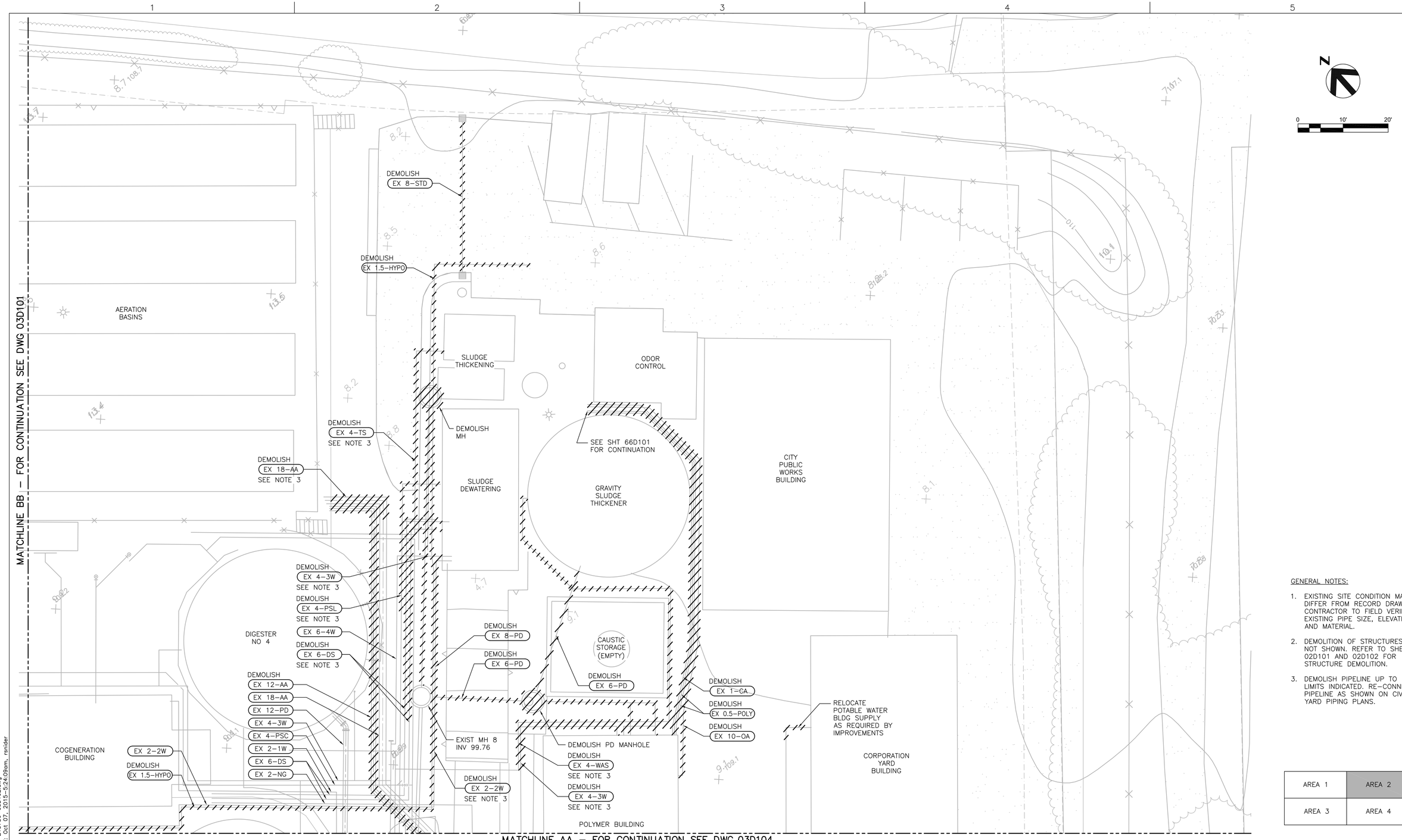


GENERAL NOTES:

1. EXISTING SITE CONDITION MAY DIFFER FROM RECORD DRAWINGS. CONTRACTOR TO FIELD VERIFY EXISTING PIPE SIZE, ELEVATION, AND MATERIAL.
2. DEMOLITION OF STRUCTURES ARE NOT SHOWN. REFER TO SHEETS 02D101 AND 02D102 FOR STRUCTURE DEMOLITION.
3. DEMOLISH PIPELINE UP TO LIMITS INDICATED. RE–CONNECT PIPELINE AS SHOWN ON CIVIL YARD PIPING PLANS.

| | |
|---|---|
| AREA 1 | AREA 2 |
| AREA 3 | AREA 4 |

FILE: 215786–03D102.dwg
DATE: Oct 07, 2015–5:24:09am, rsnider

HDR
HDR Engineering, Inc.

| ISSUE | DATE | DESCRIPTION |
|---|---|---|
| A | JUNE 2015 | ISSUED FOR BID |

| | |
|---|---|
| PROJECT MANAGER | C. OLSON |
| DESIGNED | M. PERINPANAYAGAM |
| DESIGNED | |
| CHECKED | C. OLSON |
| DRAWN | M. FOYLE |
| DATE | JUNE 30, 2015 |
| PROJECT NUMBER | 215786 |

REGISTERED PROFESSIONAL ENGINEER
CRAIG A. OLSON
NO. 39819
EXP. 12/31/15
CIVIL
STATE OF CALIFORNIA
06-30-15

CITY OF PINOLE CALIFORNIA 1903

PINOLE/HERCULES WATER POLLUTION CONTROL PLANT UPGRADE CLIENT PN

**DEMOLITION**

**YARD PIPING PLAN AREA 2**

0 1" 2"

| | |
|---|---|
| FILENAME | 215786–03D102 |
| SCALE | 1" = 10' |

SHEET 03D102

MATCHLINE AA – FOR CONTINUATION SEE DWG 03C101

DEMOLISH EX 24–SE

DEMOLISH EX 2–3W

DEMOLISH EX 24–PE PLUG OPENING AT MANHOLE

PRIMARY CLARIFIER NO 3

EX 42–PE

DEMOLISH EX 4–PSL SEE NOTE 3

DEMOLISH EX 4–PSC SEE NOTE 3

EX 6–3W

EX 2–2W

DEMOLISH EX 1.5–HYPO

DIGESTER NO 1

DEMOLISH EX 6–3W SEE NOTE 3

DEMOLISH EX 1.5–HYPO

DEMOLISH EX 6–PD

DEMOLISH EX 8–D SEE NOTE 3

DEMOLISH EX 8–PD

EX 4–PSC

EX 4–WAS

EX 4–PSL

DEMOLISH DI, TYP

DEMOLISH PD MANHOLE, TYP

DEMOLISH EX 8–PD

DEMOLISH EX 6–3W SEE NOTE 3

DEMOLISH EX 8–PD SEE NOTE 3

EX 4–PSL

EX 4–PSC

PRIMARY CLARIFIER NO 1

CHLORINE CONTACT BASINS

WALL

DEMOLISH EX 8–PD

DEMOLISH EX 30–IS

DEMOLISH EX 18–PI SEE NOTE 3

DEMOLISH EX 8–PD

HEADWORKS (WET WELL)

DEMOLISH SS MANHOLE

EX 30–OF OUTFALL

EMEGENCY OUTFALL STRUCTURE

EX 42–SE

PRIMARY EFFLUENT JUNCTION BOX

PRIMARY CLARIFIER DISTRIBUTION BOX

HEADWORKS (DRY WELL, ELECTRICAL ROOM, AND CHLORINATION ROOM)

DEMOLISH EX 30–PI SEE NOTE 3

DEMOLISH EX 6–PD

FOR YARD PIPING DEMOLITION IN THIS AREA, SEE 22D101

MAINTENANCE SHOP

EX 2–NG

DEMOLISH EX 2–2W SEE NOTE 3

EX 36–FE

PRIMARY CLARIFIER NO 2

DEMOLISH OR RELOCATE GAS METER, SEE NOTE 4

DEMOLISH EX 6–PD SEE NOTE 3

DEMOLISH EX 8–4W SEE NOTE 3

EFFLUENT PUMP STATION

DEMOLISH EX 24–FE SEE NOTE 3

STORAGE SHED

BISULFITE STORAGE

DIESEL TANK

MATCHLINE BB – FOR CONTINUATION SEE DWG 03C104

N

0 10' 20'

GENERAL NOTES:

1. EXISTING SITE CONDITION MAY DIFFER FROM RECORD DRAWINGS. CONTRACTOR TO FIELD VERIFY EXISTING PIPE SIZE, ELEVATION, AND MATERIAL.
2. DEMOLITION OF STRUCTURES ARE NOT SHOWN. REFER TO SHEETS 02D101 AND 02D102 FOR STRUCTURE DEMOLITION.
3. DEMOLISH PIPELINE UP TO LIMITS INDICATED. RE–CONNECT PIPELINE AS SHOWN ON CIVIL YARD PIPING PLANS.
4. GAS METER MAY BE RELOCATED WITH APPROVAL FROM PG&E.

| | |
|---|---|
| AREA 1 | AREA 2 |
| AREA 3 | AREA 4 |

FILE: 215786–03D103.dwg
DATE: Oct 07, 2015–5:24:16am, rsnider

HDR Engineering, Inc.

| ISSUE | DATE | DESCRIPTION |
|---|---|---|
| A | JUNE 2015 | ISSUED FOR BID |

| | |
|---|---|
| PROJECT MANAGER | C. OLSON |
| DESIGNED | M. PERINPANAYAGAM |
| DESIGNED | |
| CHECKED | C. OLSON |
| DRAWN | M. FOYLE |
| DATE | JUNE 30, 2015 |
| PROJECT NUMBER | 215786 |

REGISTERED PROFESSIONAL ENGINEER CRAIG A. OLSON NO. 39819 EXP. 12/31/15 CIVIL STATE OF CALIFORNIA 06-30-15

CITY OF PINOLE CALIFORNIA 1903

PINOLE/HERCULES WATER POLLUTION CONTROL PLANT UPGRADE CLIENT PN

**DEMOLITION**

**YARD PIPING PLAN AREA 3**

0 1" 2"

| | |
|---|---|
| FILENAME | 215786–03D103 |
| SCALE | 1" = 10' |

SHEET **03D103**

MATCHLINE AA – FOR CONTINUATION SEE DWG 03C102

MATCHLINE BB – FOR CONTINUATION SEE DWG 03C101

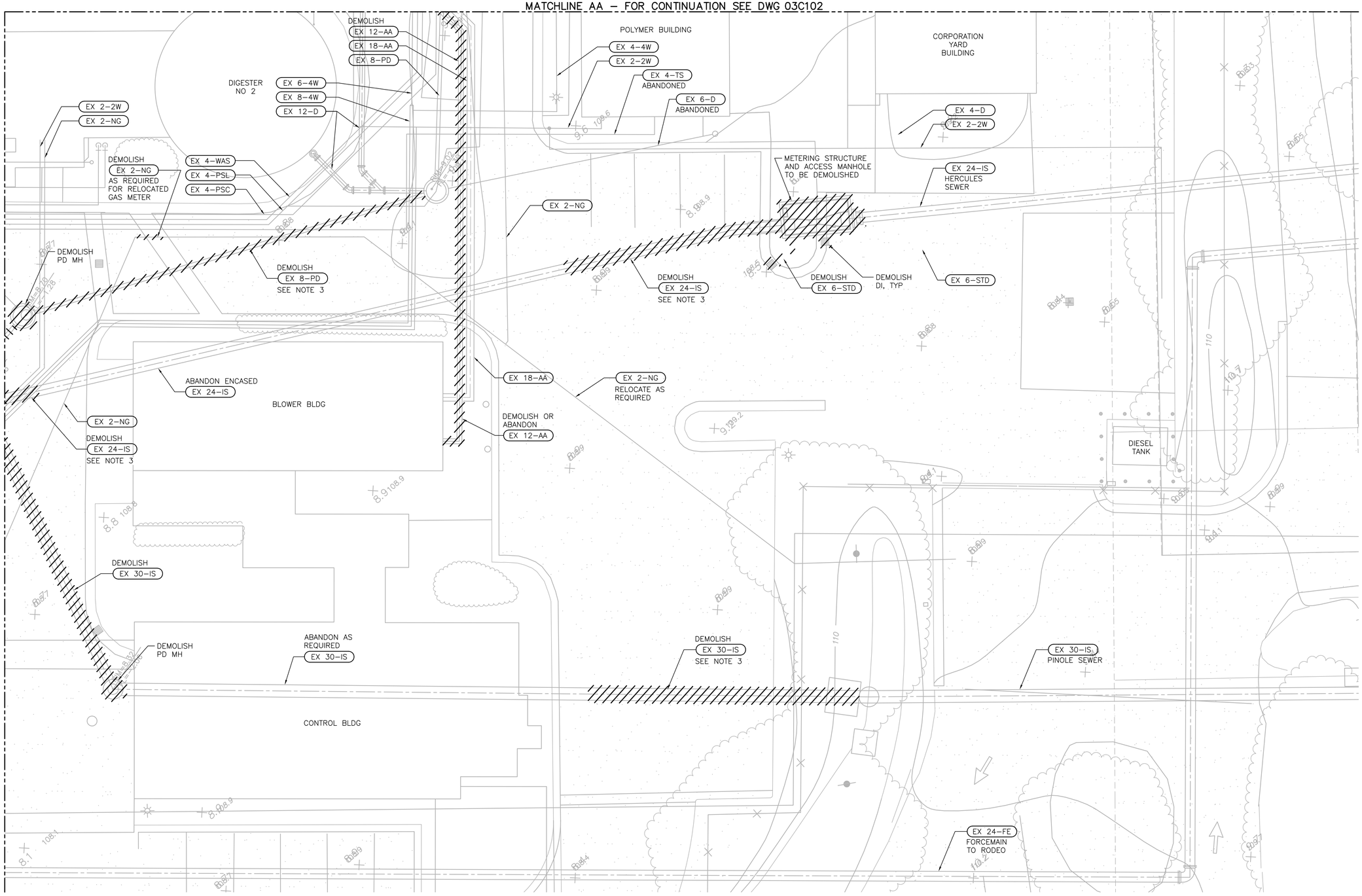


GENERAL NOTES:

1. EXISTING SITE CONDITION MAY DIFFER FROM RECORD DRAWINGS. CONTRACTOR TO FIELD VERIFY EXISTING PIPE SIZE, ELEVATION, AND MATERIAL.
2. DEMOLITION OF STRUCTURES ARE NOT SHOWN. REFER TO SHEETS 02D101 AND 02D102 FOR STRUCTURE DEMOLITION.
3. DEMOLISH PIPELINE UP TO LIMITS INDICATED. RE–CONNECT PIPELINE AS SHOWN ON CIVIL YARD PIPING PLANS.
4. EXISTING HERCULES AND PINOLE INFLUENT SEWER PIPELINES ARE ASBESTOS CONCRETE PIPE (ACP). DEMOLISH PIPES PER SECTION 15072.

| | |
|---|---|
| AREA 1 | AREA 2 |
| AREA 3 | AREA 4 |

FILE: 215786–03D104.dwg
DATE: Oct 07, 2015–5:24:23am, rsnider

HDR Engineering, Inc.

| ISSUE | DATE | DESCRIPTION |
|---|---|---|
| A | JUNE 2015 | ISSUED FOR BID |

| | |
|---|---|
| PROJECT MANAGER | C. OLSON |
| DESIGNED | M. PERINPANAYAGAM |
| DESIGNED | |
| CHECKED | C. OLSON |
| DRAWN | M. FOYLE |
| DATE | JUNE 30, 2015 |
| PROJECT NUMBER | 215786 |

REGISTERED PROFESSIONAL ENGINEER
CRAIG A. OLSON
NO. 39819
EXP. 12/31/15
CIVIL
STATE OF CALIFORNIA
06-30-15

CITY OF PINOLE CALIFORNIA 1903

PINOLE/HERCULES
WATER POLLUTION
CONTROL PLANT UPGRADE
CLIENT PN

**DEMOLITION**

**YARD PIPING PLAN**
**AREA 4**

0 1" 2"

| | |
|---|---|
| FILENAME | 215786–03D104 |
| SCALE | 1" = 10' |

SHEET
**03D104**

NOTES:

1. NOT ALL PIPING AND EQUIPMENT IS SHOWN.
2. CONTRACTOR TO DEMOLISH ALL PIPING, EQUIPMENT, AND CONCRETE AT OR ABOVE ELEVATION 93.0. AND DEMOLISH ALL PIPING AND EQUIPMENT INSIDE STRUCTURE BELOW ELEVATION 93.0.

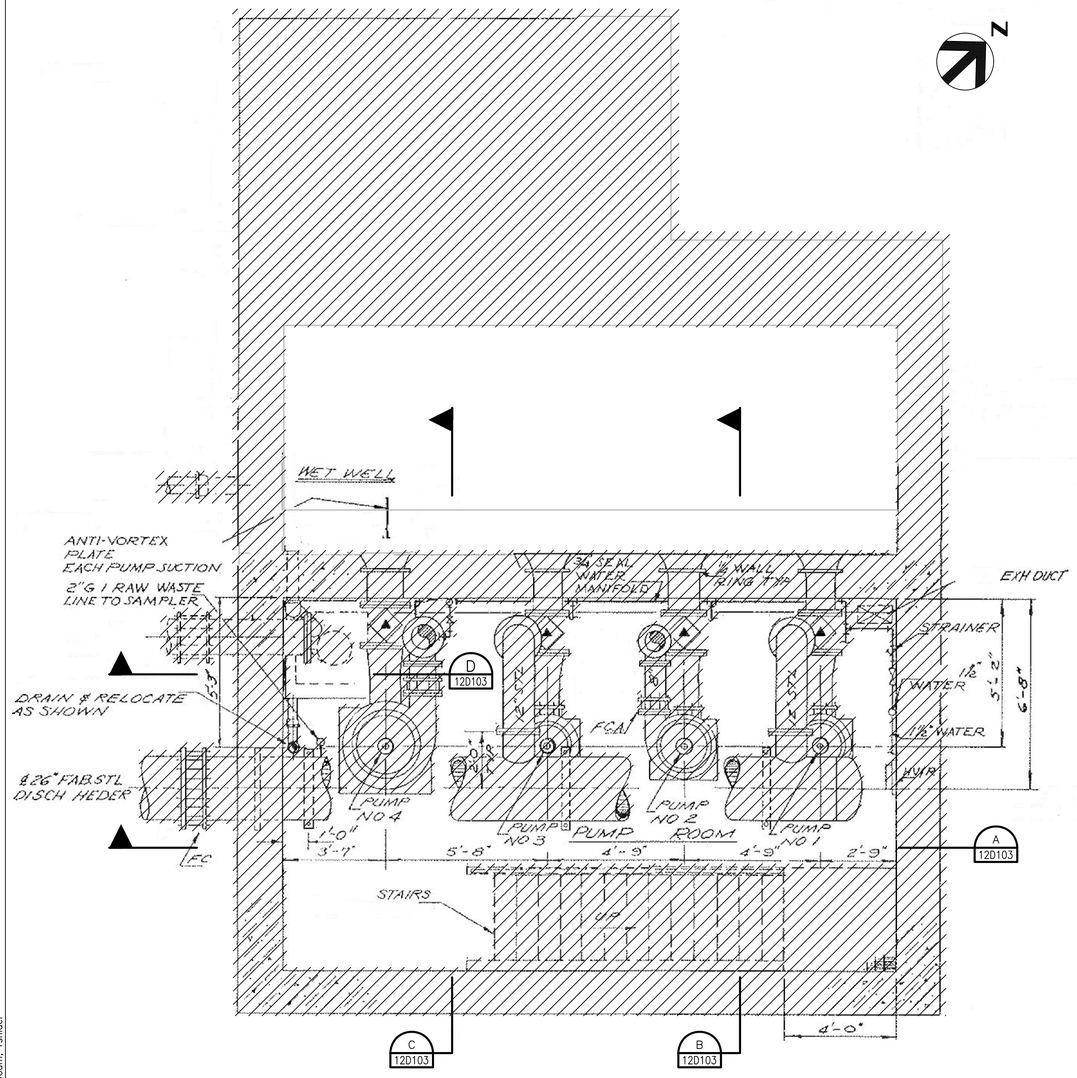


LOWER LEVEL PLAN
3/8" = 1'-0"

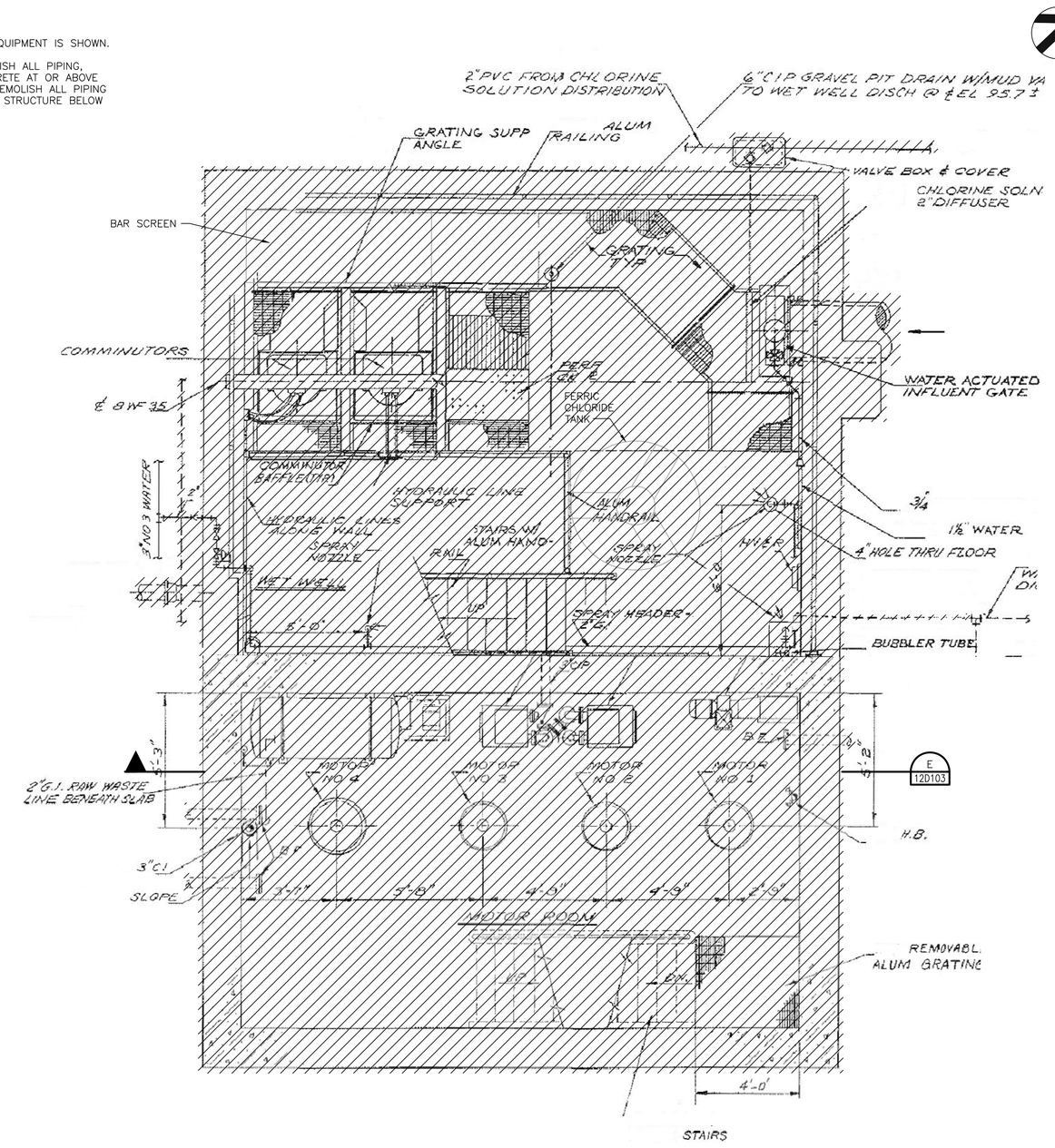


INTERMEDIATE LEVEL PLAN
3/8" = 1'-0"

FILE: 215786-12D101.dwg
DATE: Oct 07, 2015-4:31:06am rsnider

HDR Engineering, Inc.

| ISSUE | DATE | DESCRIPTION |
|---|---|---|
| A | JUNE 2015 | ISSUED FOR BID |

| | |
|---|---|
| PROJECT MANAGER | C. OLSON |
| DESIGNED | R. NATOLI |
| DESIGNED | |
| CHECKED | C. OLSON |
| DRAWN | M. FOYLE |
| DATE | JUNE 30, 2015 |
| PROJECT NUMBER | 215786 |

REGISTERED PROFESSIONAL ENGINEER CRAIG A. OLSON NO. 39819 EXP. 12/31/15 CIVIL STATE OF CALIFORNIA

CITY OF PINOLE CALIFORNIA 1903

PINOLE/HERCULES
WATER POLLUTION
CONTROL PLANT UPGRADE
CLIENT PN

**DEMOLITION**

**HEADWORKS**
**LOWER AND INTERMEDIATE LEVEL PLANS**

0 1" 2"

| | |
|---|---|
| FILENAME | 215786-12D101 |
| SCALE | AS NOTED |

SHEET 12D101

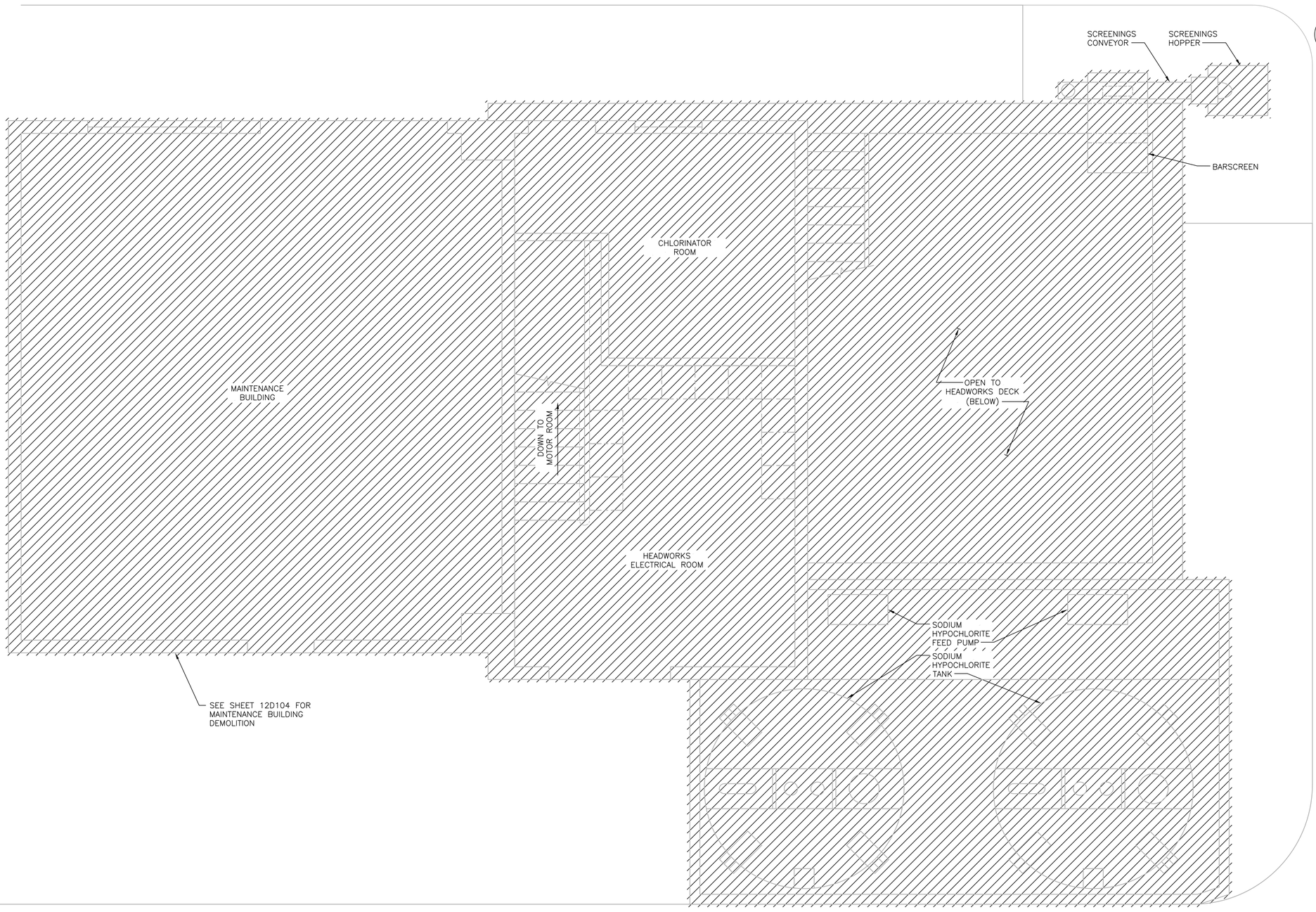


NOTES:

1. NOT ALL PIPING AND EQUIPMENT IS SHOWN.
2. CONTRACTOR TO DEMOLISH ALL PIPING, EQUIPMENT, AND CONCRETE AT OR ABOVE ELEVATION 93.0. AND DEMOLISH ALL PIPING AND EQUIPMENT INSIDE STRUCTURE BELOW ELEVATION 93.0.

## UPPER LEVEL PLAN

3/8" = 1'-0"

FILE: 215786-12D102.dwg
DATE: Oct 07, 2015-4:31:17am, rsnider

HDR
HDR Engineering, Inc.

| ISSUE | DATE | DESCRIPTION |
|---|---|---|
| A | JUNE 2015 | ISSUED FOR BID |

| | |
|---|---|
| PROJECT MANAGER | C. OLSON |
| DESIGNED | R. NATOLI |
| DESIGNED | |
| CHECKED | C. OLSON |
| DRAWN | M. FOYLE |
| DATE | JUNE 30, 2015 |
| PROJECT NUMBER | 215786 |

REGISTERED PROFESSIONAL ENGINEER
CRAIG A. OLSON
NO. 39819
EXP. 12/31/15
CIVIL
STATE OF CALIFORNIA
06-30-15

CITY OF PINOLE CALIFORNIA 1903

PINOLE/HERCULES
WATER POLLUTION
CONTROL PLANT UPGRADE
CLIENT PN

**DEMOLITION**

**HEADWORKS**
**UPPER LEVEL PLAN**

0 1" 2"

| | |
|---|---|
| FILENAME | 215786-12D102 |
| SCALE | AS NOTED |

SHEET
**12D102**

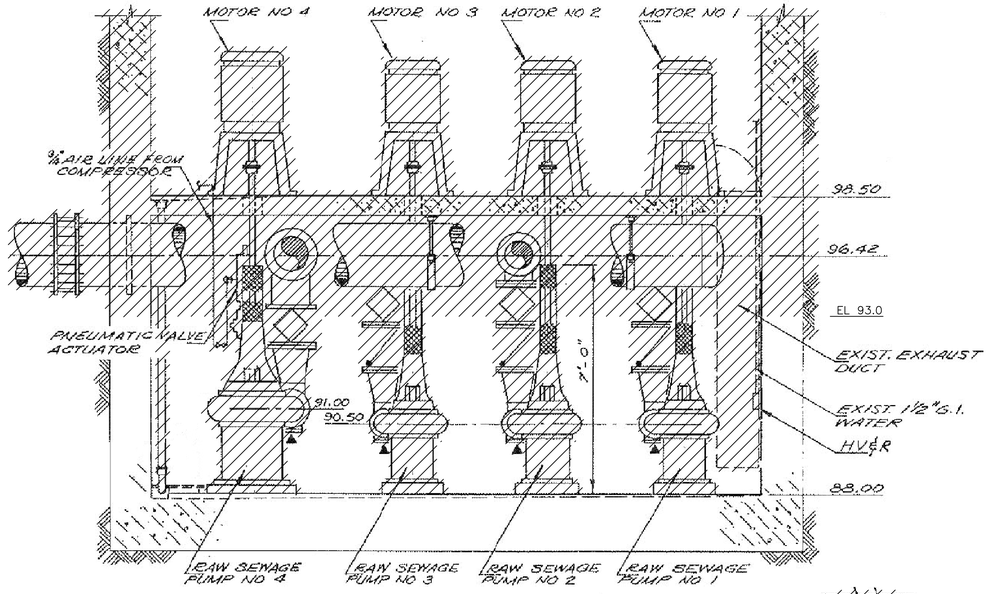


SECTION
3/8" = 1'-0"
A 12D101

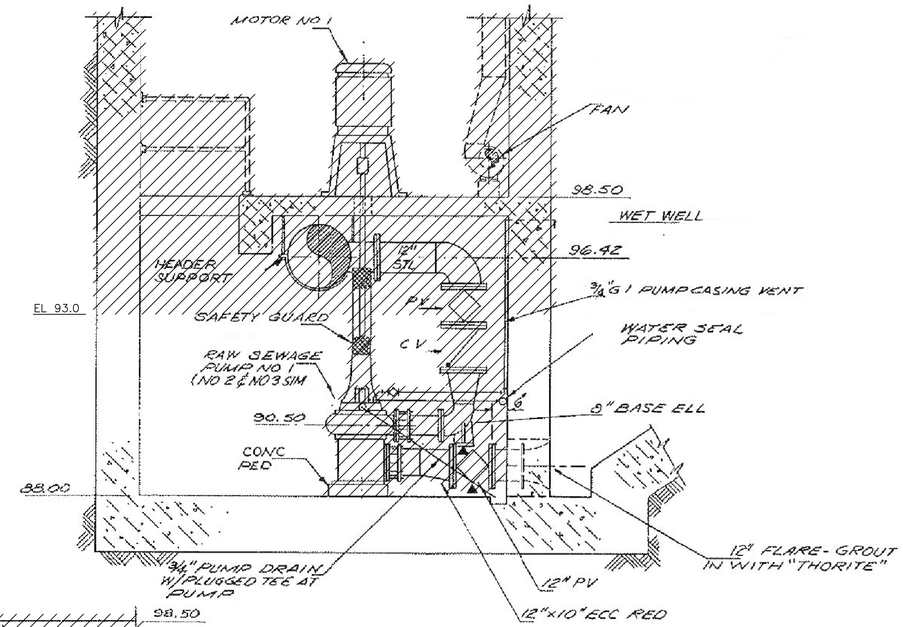


NOTE: DRAIN, VENT & WATER SEAL PIPING TYPICAL PUMPS NO 1, 2, 3 & 4

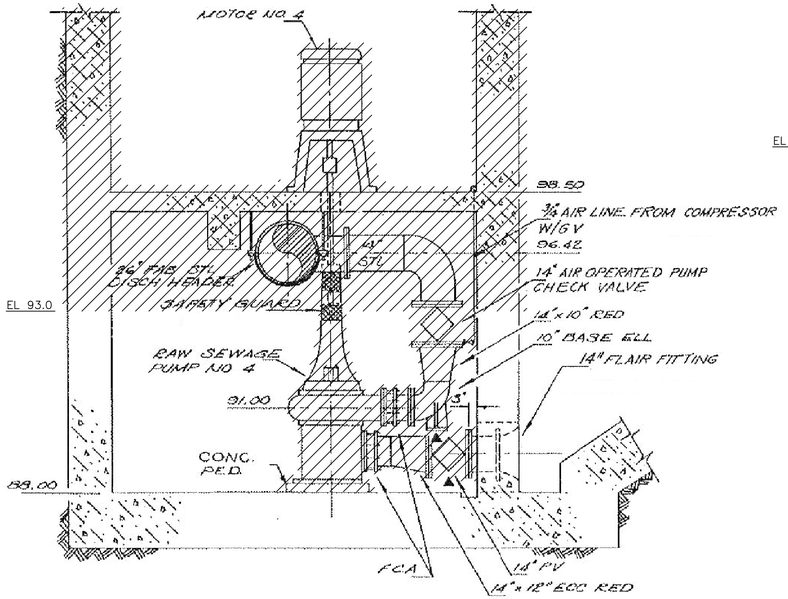


SECTION
3/8" = 1'-0"
C 12D101

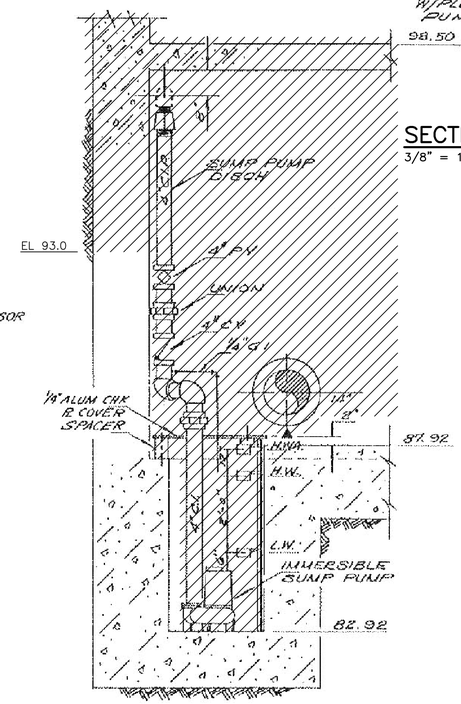


SECTION
3/8" = 1'-0"
D 12D101

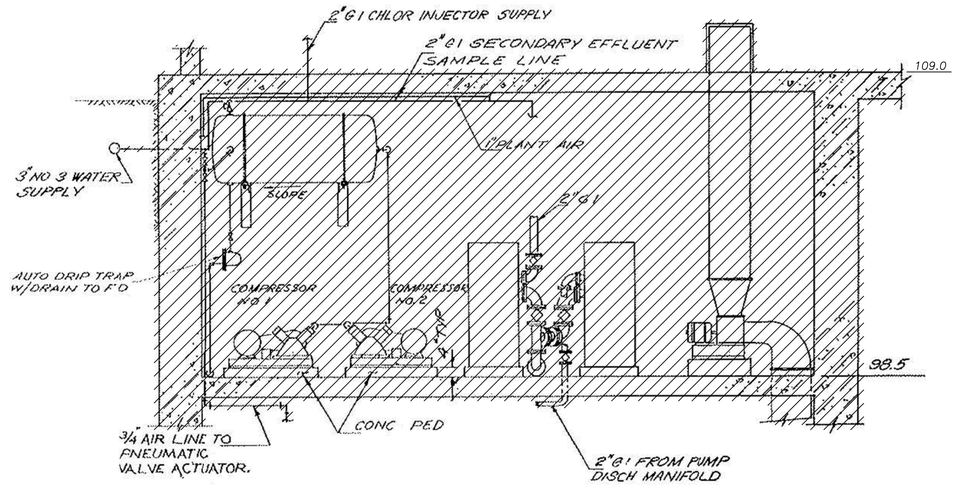


SECTION
3/8" = 1'-0"
E 12D101

NOTES:

1. NOT ALL PIPING AND EQUIPMENT IS SHOWN.
2. CONTRACTOR TO DEMOLISH ALL PIPING, EQUIPMENT, AND CONCRETE AT OR ABOVE ELEVATION 93.0. AND DEMOLISH ALL PIPING AND EQUIPMENT INSIDE STRUCTURE BELOW ELEVATION 93.0.

FILE: 215786-12D103.dwg
DATE: Oct 07, 2015--4:31:23am, rsnider

HDR Engineering, Inc.

| ISSUE | DATE | DESCRIPTION |
|---|---|---|
| A | JUNE 2015 | ISSUED FOR BID |

| | |
|---|---|
| PROJECT MANAGER | C. OLSON |
| DESIGNED | R. NATOLI |
| DESIGNED | |
| CHECKED | C. OLSON |
| DRAWN | M. FOYLE |
| DATE | JUNE 30, 2015 |
| PROJECT NUMBER | 215786 |

REGISTERED PROFESSIONAL ENGINEER
CRAIG A. OLSON
NO. 39819
EXP. 12/31/15
CIVIL
STATE OF CALIFORNIA
06-30-15

CITY OF PINOLE CALIFORNIA 1903

PINOLE/HERCULES
WATER POLLUTION
CONTROL PLANT UPGRADE
CLIENT PN

**DEMOLITION**

**HEADWORKS SECTIONS**

0 1" 2"

| | |
|---|---|
| FILENAME | 215786-12D103 |
| SCALE | AS NOTED |

SHEET
**12D103**

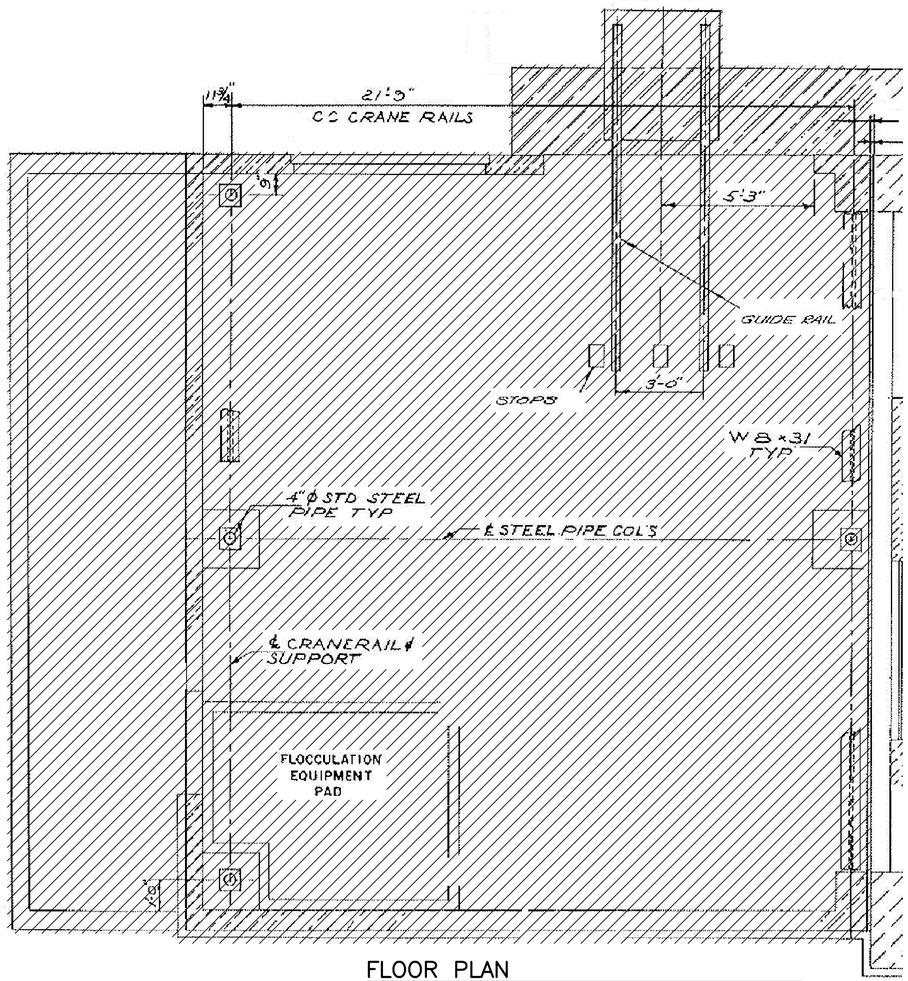


FLOOR PLAN

3/8" = 1'-0"

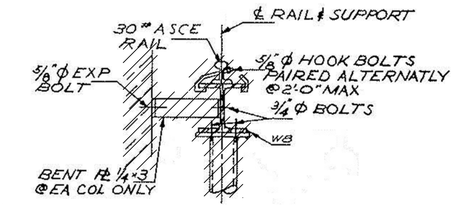


CRANE RAIL ATTACHEMENT DETAIL

NTS

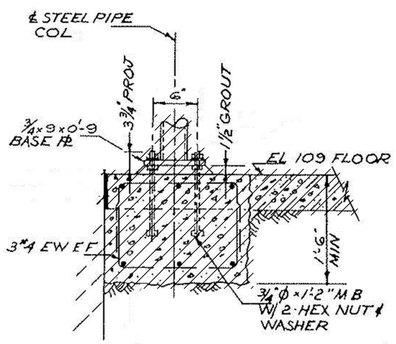


CRANE COLUMN FOOTING DETAIL

NTS

FILE: 215786-12D104.dwg
DATE: Oct 07, 2015 - 4:31:32pm, rsnider

HDR Engineering, Inc.

| ISSUE | DATE | DESCRIPTION |
|---|---|---|
| A | JUNE 2015 | ISSUED FOR BID |

| | |
|---|---|
| PROJECT MANAGER | C. OLSON |
| | |
| DESIGNED | C. OLSON |
| DESIGNED | |
| CHECKED | C. OLSON |
| DRAWN | R. SNIDER |
| DATE | JUNE 30, 2015 |
| | |
| PROJECT NUMBER | 215786 |

REGISTERED PROFESSIONAL ENGINEER
CRAIG A. OLSON
NO. 39819
EXP. 12/31/15
CIVIL
STATE OF CALIFORNIA
04-30-15

CITY OF PINOLE CALIFORNIA 1903

PINOLE/HERCULES
WATER POLLUTION
CONTROL PLANT UPGRADE
CLIENT PN

**DEMOLITION**

**MAINTENANCE BUILDING**
**PLAN, PHOTO, AND DETAILS**

0 1" 2"

| | |
|---|---|
| FILENAME | 215786-12D104 |
| SCALE | AS NOTED |

SHEET
**12D104**

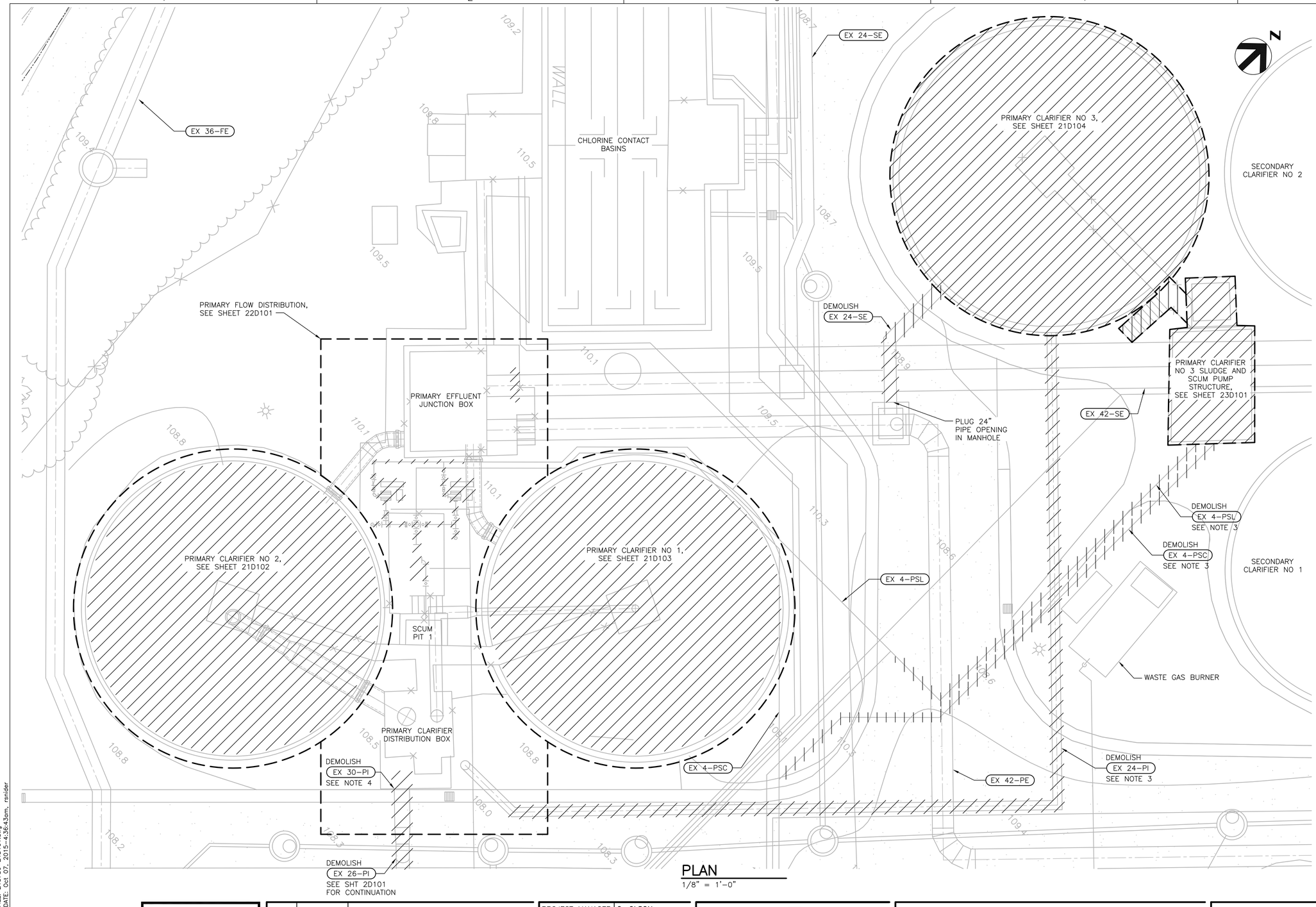


PLAN
1/8" = 1'-0"

NOTES:

1. THIS PLAN IS FOR ORIENTATION PURPOSES. NOT ALL PIPING AND EQUIPMENT IS SHOWN. MORE DETAILED WORK IS SHOWN ON SUBSEQUENT SERIES 21 DEMOLITION SHEETS.
2. DEMOLITION WORK FOR AREAS OTHER THAN SERIES 21 IS NOT REFLECTED ON THIS SHEET. SEE SHEETS 00D002, 03D101 AND 03D103 FOR MORE INFORMATION.
3. DEMOLISH PIPELINE UP TO LIMITS INDICATED. RECONNECT PIPELINE AS SHOWN ON 03C101.
4. DEMOLISH PIPELINE IN VERTICAL AT PRIMARY CLARIFIER DISTRIBUTION BOX AS INDICATED ON SHEET 22D102. RECONNECT AS INDICATED ON SHEET 22P102.

FILE: 215786-21D101.dwg
DATE: Oct 07, 2015-4:36:43am, rsnider

HDR
HDR Engineering, Inc.

| ISSUE | DATE | DESCRIPTION |
|---|---|---|
| A | JUNE 2015 | ISSUED FOR BID |

| | |
|---|---|
| PROJECT MANAGER | C. OLSON |
| DESIGNED | T. KONTONICKAS |
| DESIGNED | |
| CHECKED | C. OLSON |
| DRAWN | M. FOYLE |
| DATE | JUNE 30, 2015 |
| PROJECT NUMBER | 215786 |

REGISTERED PROFESSIONAL ENGINEER
CRAIG A. OLSON
NO. 39819
EXP. 12/31/15
CIVIL
STATE OF CALIFORNIA
06-30-15

CITY OF PINOLE CALIFORNIA 1903

PINOLE/HERCULES
WATER POLLUTION
CONTROL PLANT UPGRADE
CLIENT PN

**DEMOLITION**

**PRIMARY CLARIFIERS**
**SITE KEY PLAN**

0 1" 2"

| | |
|---|---|
| FILENAME | 215786-21D101 |
| SCALE | AS NOTED |

SHEET
**21D101**

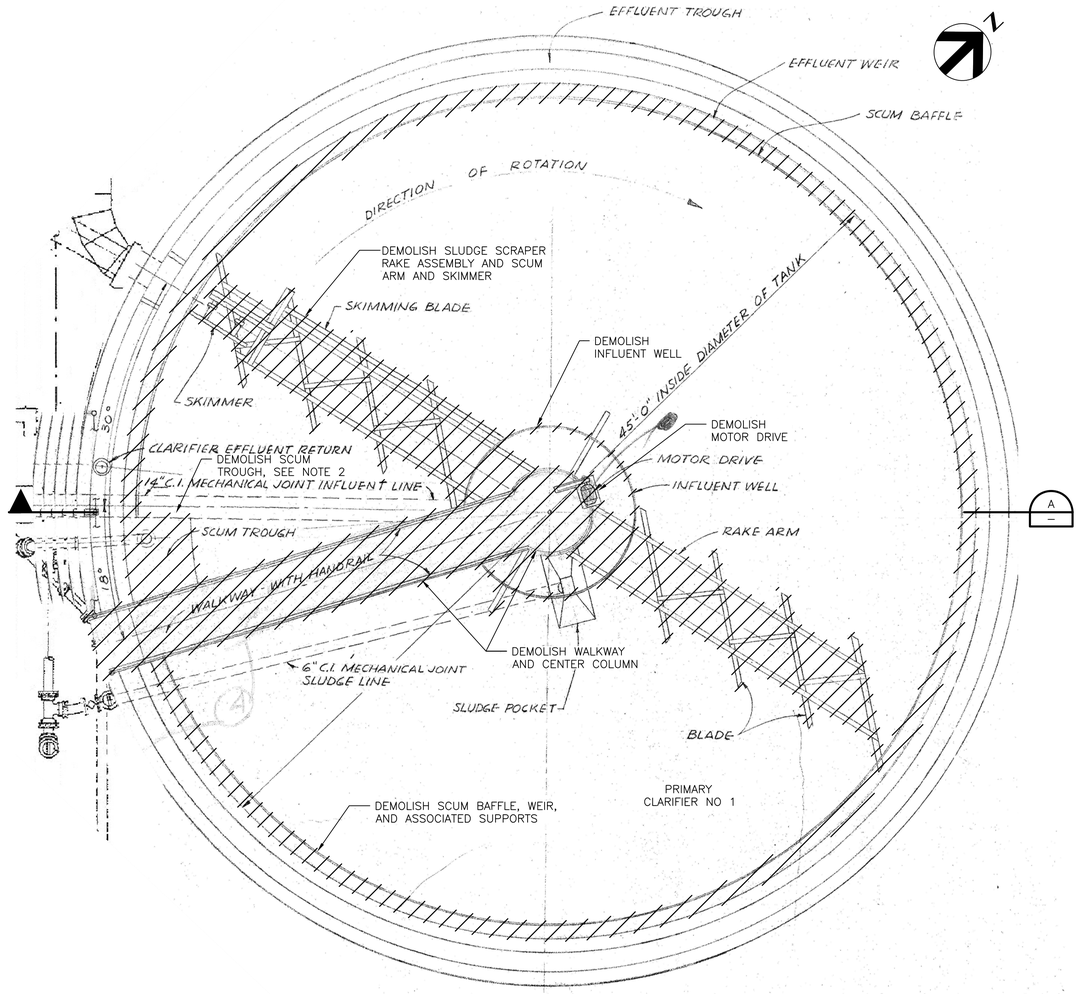


PLAN
1/4" = 1'-0"

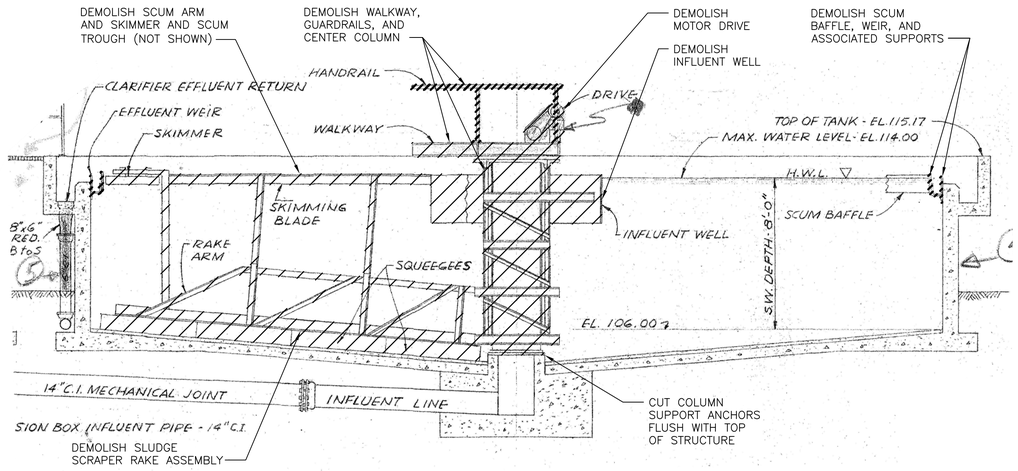


SECTION
1/4" = 1'-0"

NOTES:

1. PIPELINE SIZES AND CONFIGURATIONS SHOWN MAY BE INCORRECT. REFER TO SHEET 22D101 FOR CURRENT PIPE SIZES AND CONFIGURATIONS.
2. DEMOLISH 6" SCUM LINE BELOW TROUGH. RECONNECT AS INDICATED ON SHEET 22P102.

FILE: 215786-21D102.dwg
DATE: Oct 07, 2015-4:36:50am, rsnider

HDR Engineering, Inc.

| ISSUE | DATE | DESCRIPTION |
|---|---|---|
| A | JUNE 2015 | ISSUED FOR BID |

| | |
|---|---|
| PROJECT MANAGER | C. OLSON |
| DESIGNED | T. KONTONICKAS |
| DESIGNED | |
| CHECKED | C. OLSON |
| DRAWN | M. FOYLE |
| DATE | JUNE 30, 2015 |
| PROJECT NUMBER | 215786 |

REGISTERED PROFESSIONAL ENGINEER
CRAIG A. OLSON
NO. 39819
EXP. 12/31/15
CIVIL
STATE OF CALIFORNIA
04-30-15

CITY OF PINOLE CALIFORNIA 1903

PINOLE/HERCULES
WATER POLLUTION
CONTROL PLANT UPGRADE
CLIENT PN

**DEMOLITION**

**PRIMARY CLARIFIER NO 1**
**PLAN AND SECTION**

0 1" 2"

| | |
|---|---|
| FILENAME | 215786-21D102 |
| SCALE | AS NOTED |

SHEET
**21D102**

NOTES:

1. PIPELINE SIZES AND CONFIGURATIONS SHOWN MAY BE INCORRECT. REFER TO SHEET 22D101 FOR CURRENT PIPE SIZES AND CONFIGURATIONS.
2. DEMOLISH 6" SCUM LINE BELOW TROUGH. RECONNECT AS INDICATED ON SHEET 22P103.

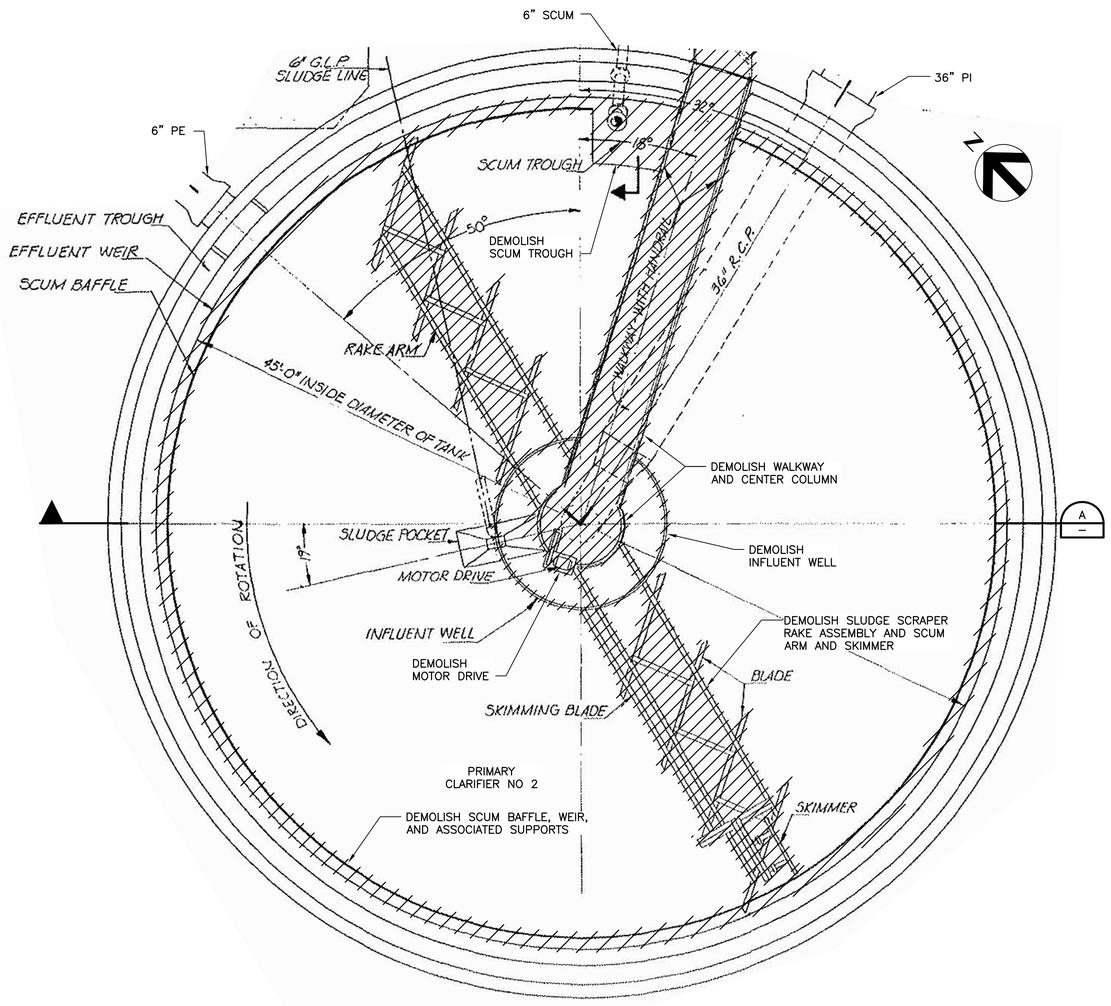


PLAN
1/4" = 1'-0"

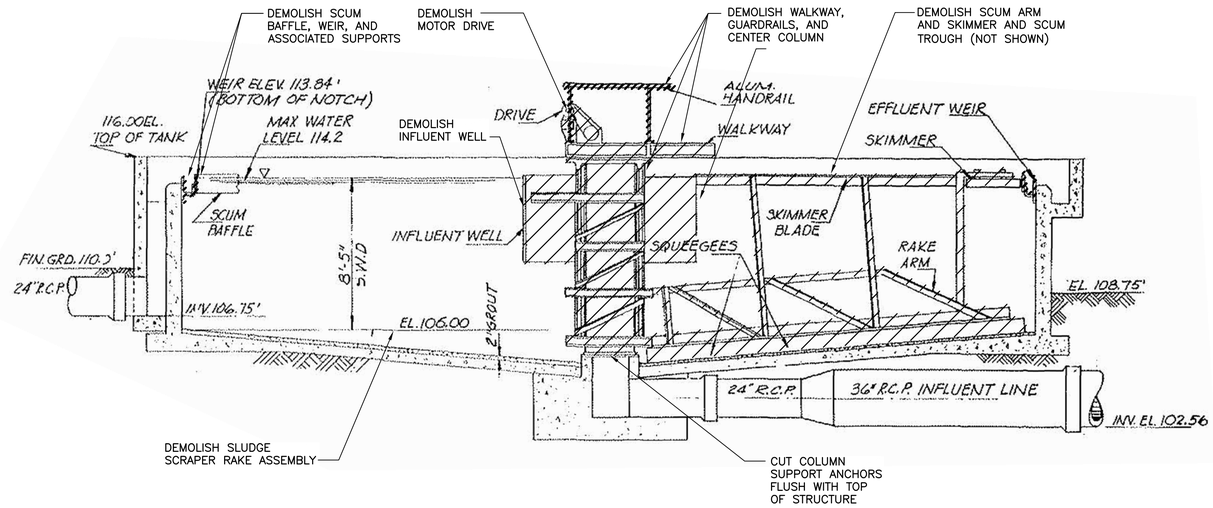


SECTION A
1/4" = 1'-0"

FILE: 215786-21D103.dwg
DATE: Oct 07, 2015-4:37:52am, rsnider

HDR
HDR Engineering, Inc.

| ISSUE | DATE | DESCRIPTION |
|---|---|---|
| A | JUNE 2015 | ISSUED FOR BID |

| | |
|---|---|
| PROJECT MANAGER | C. OLSON |
| DESIGNED | T. KONTONICKAS |
| DESIGNED | |
| CHECKED | C. OLSON |
| DRAWN | M. FOYLE |
| DATE | JUNE 30, 2015 |
| PROJECT NUMBER | 215786 |

REGISTERED PROFESSIONAL ENGINEER
CRAIG A. OLSON
NO. 39819
EXP. 12/31/15
CIVIL
STATE OF CALIFORNIA
06-30-15

CITY OF PINOLE CALIFORNIA 1903

PINOLE/HERCULES
WATER POLLUTION
CONTROL PLANT UPGRADE
CLIENT PN

**DEMOLITION**

**PRIMARY CLARIFIER NO 2**
**PLAN AND SECTION**

0 1" 2"

| | |
|---|---|
| FILENAME | 215786-21D103 |
| SCALE | AS NOTED |

SHEET
**21D103**

GENERAL NOTES:

1. DEMOLISH ENTIRE CONCRETE CLARIFIER STRUCTURE, SLUDGE AND SCUM COLLECTION MECHANISMS, CENTER WELL, INFLUENT WELL, MOTOR DRIVE AND ASSOCIATED APPURTENANCES, WALKWAY AND GUARDRAILS, BAFFLES AND WEIRS, AND ALL PIPING.

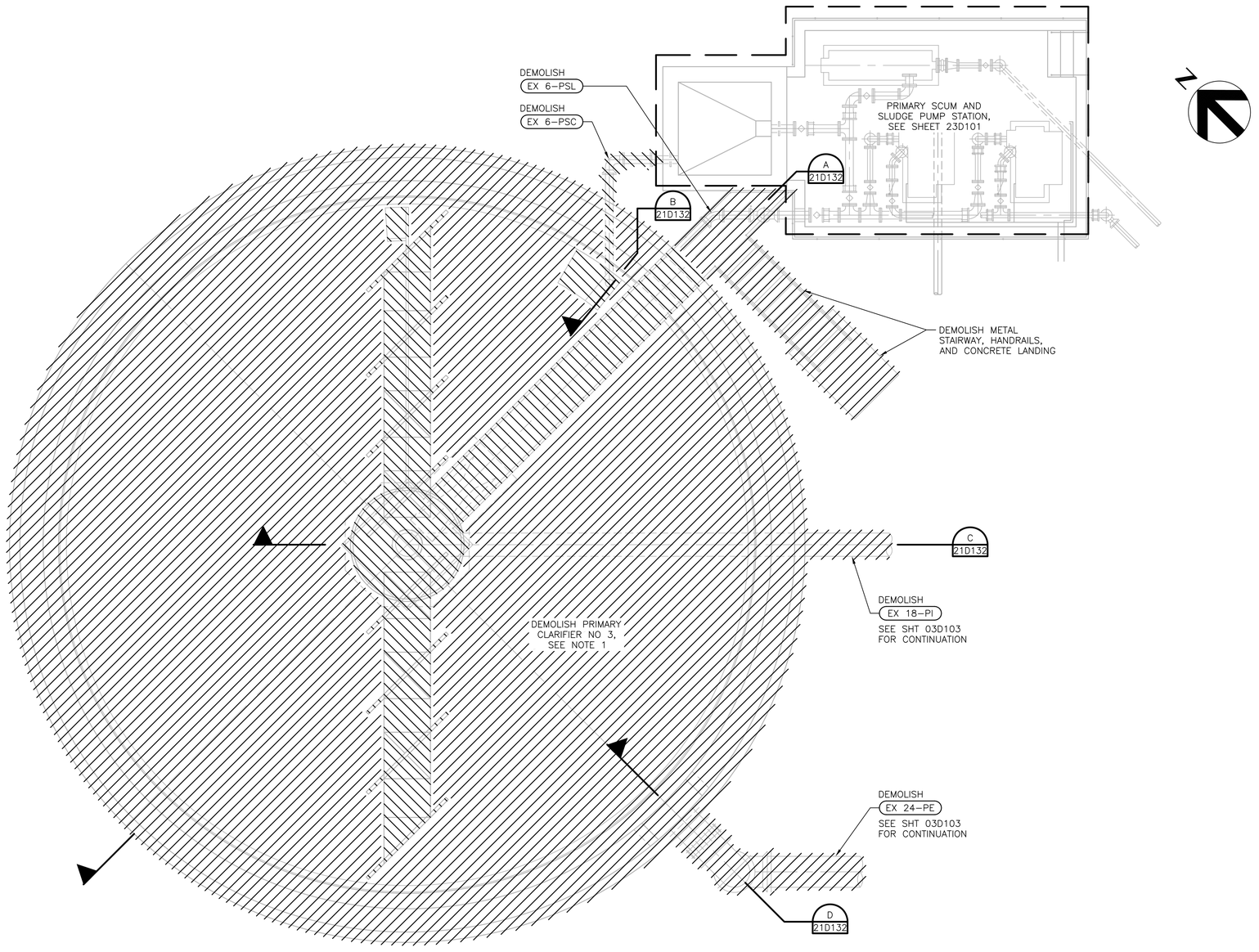


PLAN
1/4" = 1'-0"

FILE: 215786-21D104.dwg
DATE: Oct 07, 2015-4:38:25am, rsnider

HDR Engineering, Inc.

| ISSUE | DATE | DESCRIPTION |
|---|---|---|
| A | JUNE 2015 | ISSUED FOR BID |

| | |
|---|---|
| PROJECT MANAGER | C. OLSON |
| DESIGNED | T. KONTONICKAS |
| DESIGNED | M. PERINPANAYAGAM |
| CHECKED | C. OLSON |
| DRAWN | M. FOYLE |
| DATE | JUNE 30, 2015 |
| PROJECT NUMBER | 215786 |

REGISTERED PROFESSIONAL ENGINEER
CRAIG A. OLSON
NO. 39819
EXP. 12/31/15
CIVIL
STATE OF CALIFORNIA
06-30-15

CITY OF PINOLE CALIFORNIA 1903

PINOLE/HERCULES
WATER POLLUTION
CONTROL PLANT UPGRADE
CLIENT PN

**DEMOLITION**

**PRIMARY CLARIFIER NO 3**
**PLAN**

0 1" 2"

| | |
|---|---|
| FILENAME | 215786-21D104 |
| SCALE | AS NOTED |

SHEET
**21D104**

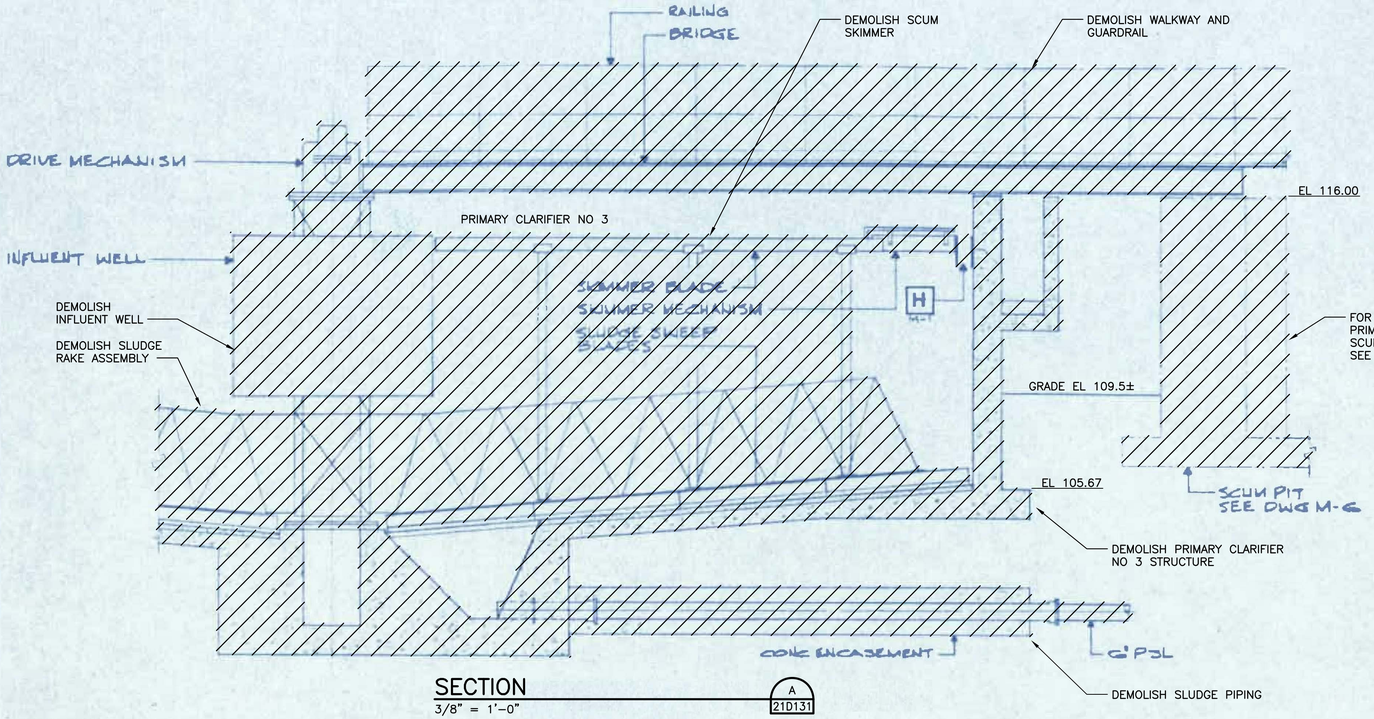


SECTION
3/8" = 1'-0"
A
21D131

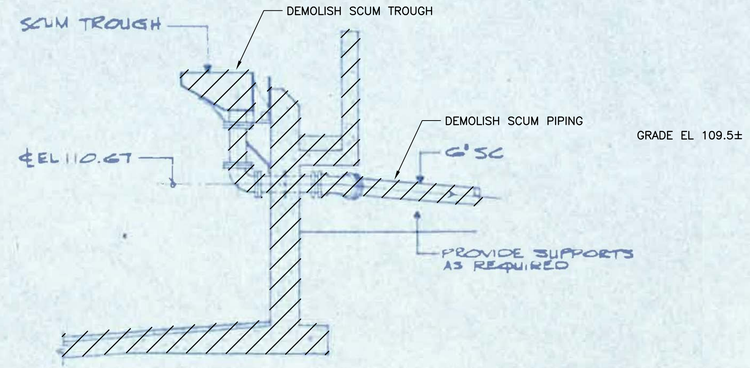


SECTION
3/8" = 1'-0"
B
21D131

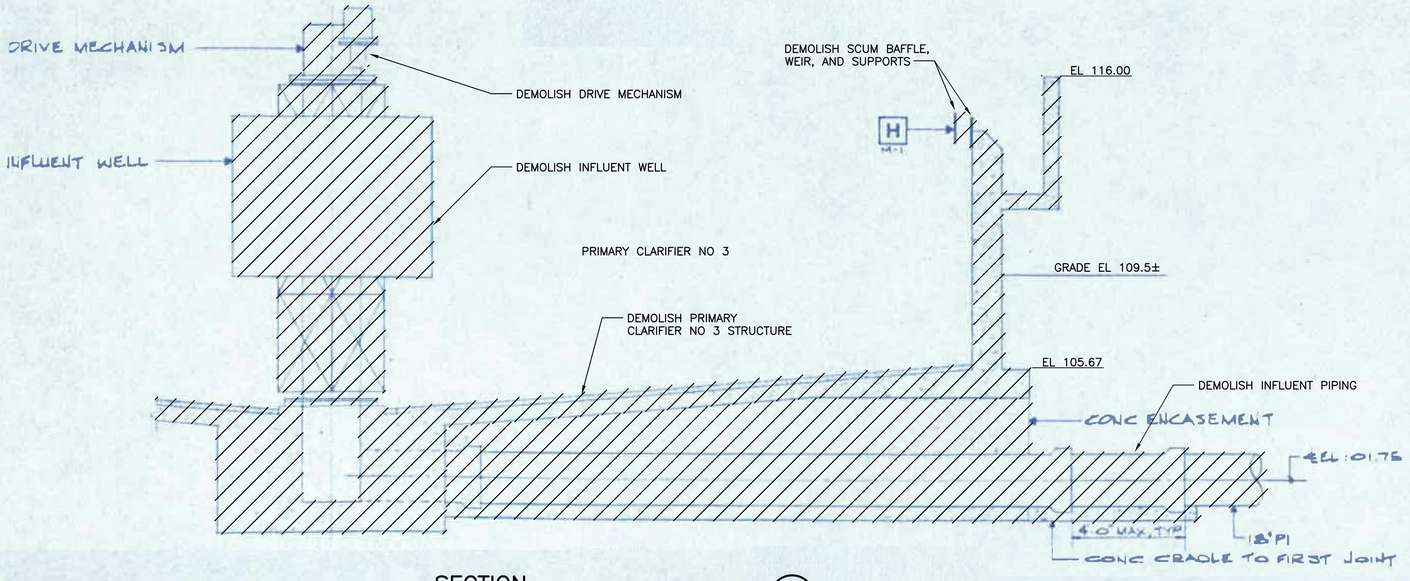


SECTION
3/8" = 1'-0"
C
21D131

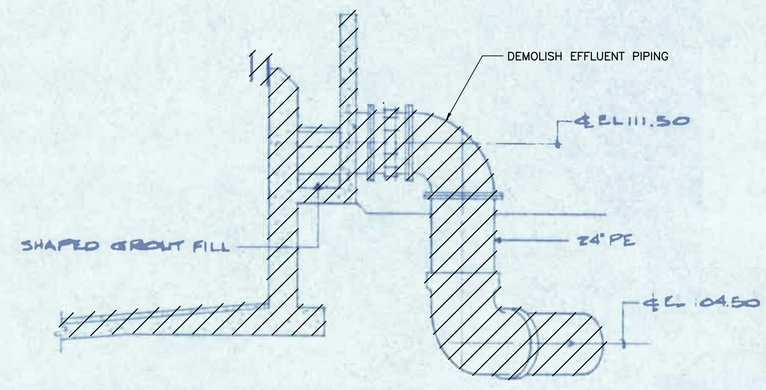


SECTION
3/8" = 1'-0"
D
21D131

FILE: 215786-21D105.dwg
DATE: Oct 07, 2015-4:38:40am, rsnider

HDR
HDR Engineering, Inc.

| ISSUE | DATE | DESCRIPTION |
|---|---|---|
| A | JUNE 2015 | ISSUED FOR BID |

| | |
|---|---|
| PROJECT MANAGER | C. OLSON |
| DESIGNED | M. PERINPANAYAGAM |
| DESIGNED | |
| CHECKED | C. OLSON |
| DRAWN | M. FOYLE |
| DATE | JUNE 30, 2015 |
| PROJECT NUMBER | 215786 |

REGISTERED PROFESSIONAL ENGINEER
CRAIG A. OLSON
NO. 39819
EXP. 12/31/15
CIVIL
STATE OF CALIFORNIA
06-30-15

CITY OF PINOLE CALIFORNIA 1903

PINOLE/HERCULES
WATER POLLUTION
CONTROL PLANT UPGRADE
CLIENT PN

**DEMOLITION**

**PRIMARY CLARIFIER NO 3 SECTIONS**

0 1" 2"

| | |
|---|---|
| FILENAME | 215786-21D105 |
| SCALE | AS NOTED |

SHEET
**21D105**

GENERAL NOTES:

1. DEMOLISH PIPELINE UP TO LIMITS INDICATED. RE-CONNECT PIPELINE AS SHOWN ON 03C101.
2. DEMOLISH BELOW GRADE 4" SLUDGE PIPING TO BURIED VALVE.

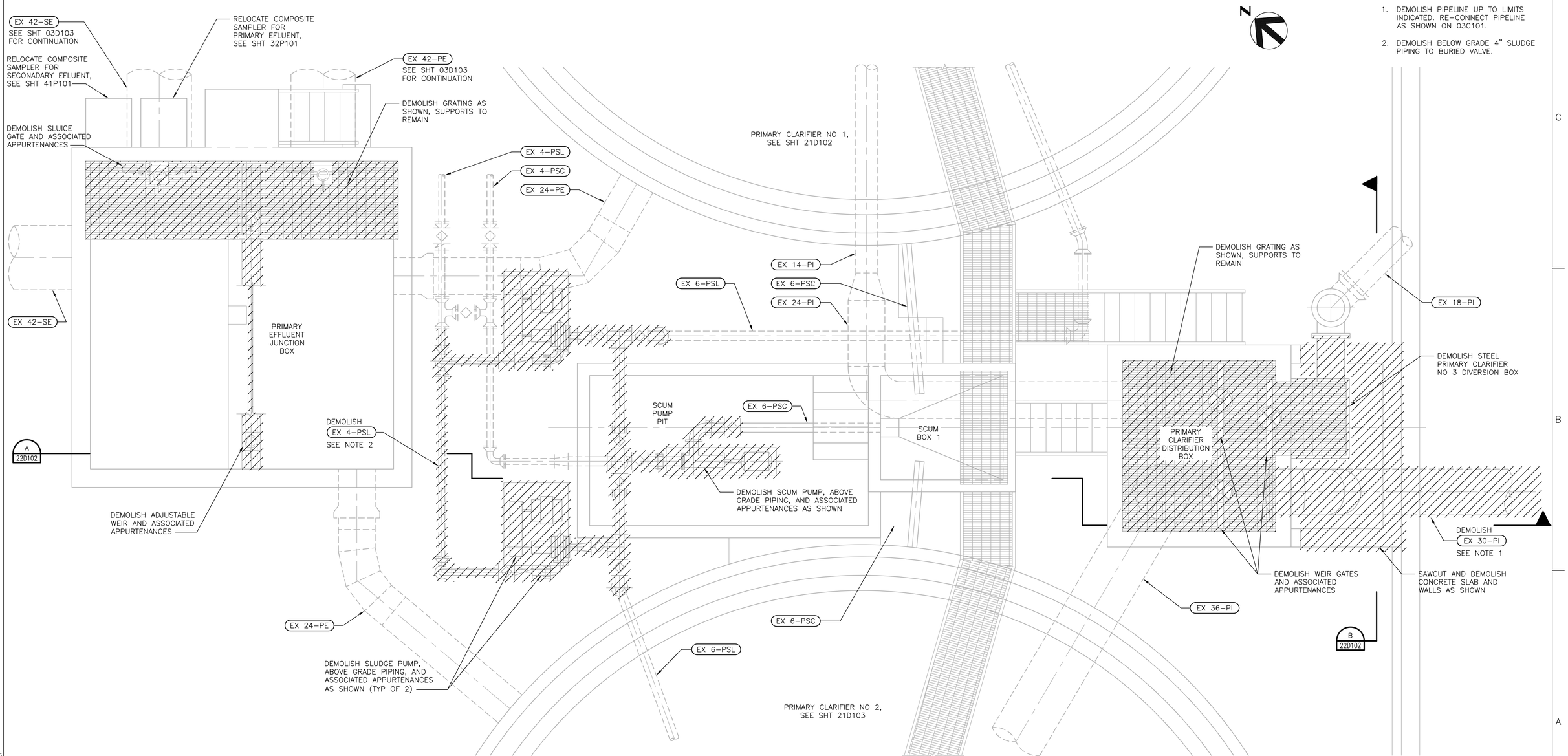


## PLAN

3/8" = 1'-0"

FILE: 215786-22D101.dwg
DATE: Oct 07, 2015-4:42:09am, rsnider

HDR Engineering, Inc.

| ISSUE | DATE | DESCRIPTION |
|---|---|---|
| A | JUNE 2015 | ISSUED FOR BID |

| | |
|---|---|
| PROJECT MANAGER | C. OLSON |
| DESIGNED | T. KONTONICKAS |
| DESIGNED | |
| CHECKED | C. OLSON |
| DRAWN | M. FOYLE |
| DATE | JUNE 30, 2015 |
| PROJECT NUMBER | 215786 |

REGISTERED PROFESSIONAL ENGINEER
CRAIG A. OLSON
NO. 39819
EXP. 12/31/15
CIVIL
STATE OF CALIFORNIA
06-30-15

CITY OF PINOLE CALIFORNIA 1903

PINOLE/HERCULES
WATER POLLUTION
CONTROL PLANT UPGRADE
CLIENT PN

**DEMOLITION**

**PRIMARY FLOW DISTRIBUTION PLAN**

0 1" 2"

| | |
|---|---|
| FILENAME | 215786-22D101 |
| SCALE | AS NOTED |

SHEET **22D101**

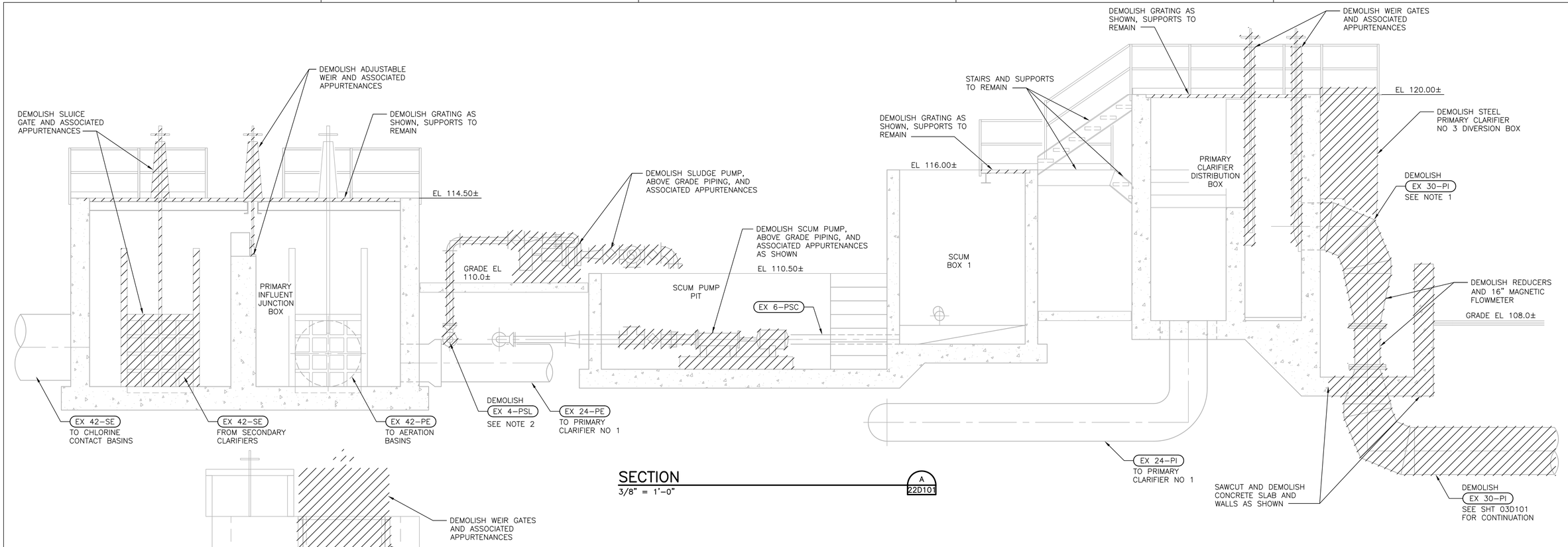


SECTION
3/8" = 1'-0"
A 22D101

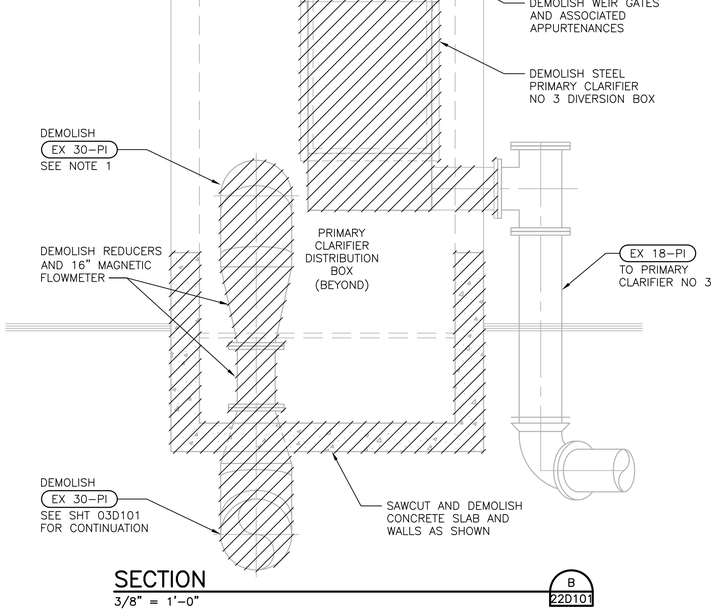


SECTION
3/8" = 1'-0"
B 22D101

GENERAL NOTES:

1. SAWCUT 30–PI AT FACE OF CONCRETE WALL AND DEMOLISH PIPELINE.
2. SAWCUT CONCRETE AS REQUIRED FOR TRENCHING.

FILE: 215786-22D102.dwg
DATE: Oct 07, 2015-4:42:16pm, rsnider

HDR Engineering, Inc.

| ISSUE | DATE | DESCRIPTION |
|---|---|---|
| A | JUNE 2015 | ISSUED FOR BID |

| | |
|---|---|
| PROJECT MANAGER | C. OLSON |
| DESIGNED | T. KONTONICKAS |
| DESIGNED | |
| CHECKED | C. OLSON |
| DRAWN | M. FOYLE |
| DATE | JUNE 30, 2015 |
| PROJECT NUMBER | 215786 |

REGISTERED PROFESSIONAL ENGINEER
CRAIG A. OLSON
NO. 39819
EXP. 12/31/15
CIVIL
STATE OF CALIFORNIA
04-30-15

CITY OF PINOLE CALIFORNIA 1903

PINOLE/HERCULES
WATER POLLUTION
CONTROL PLANT UPGRADE
CLIENT PN

**DEMOLITION**

**PRIMARY FLOW DISTRIBUTION SECTIONS**

0 1" 2"

| | |
|---|---|
| FILENAME | 215786–22D102 |
| SCALE | AS NOTED |

SHEET **22D102**

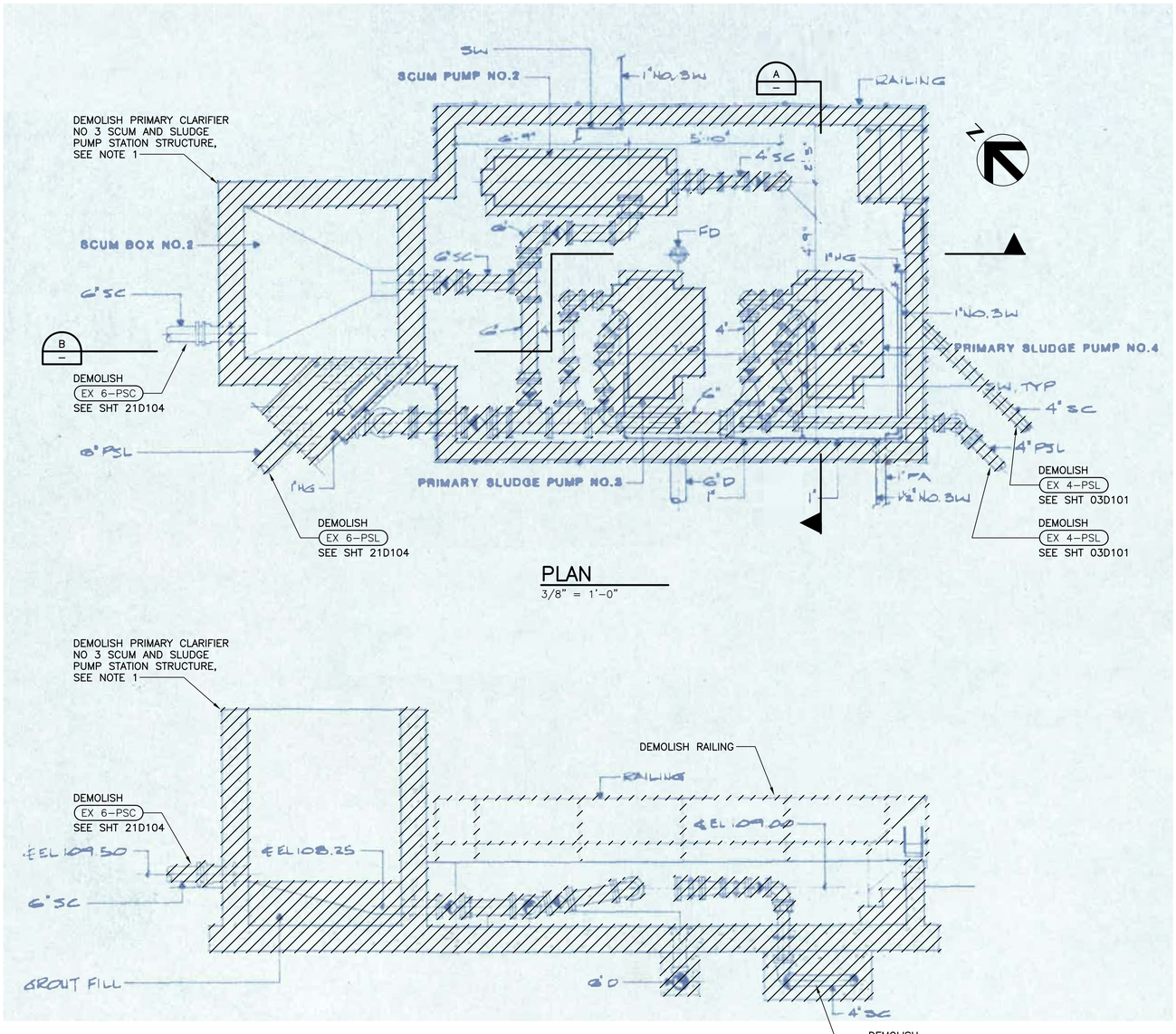


PLAN
3/8" = 1'-0"




SECTION
3/8" = 1'-0"

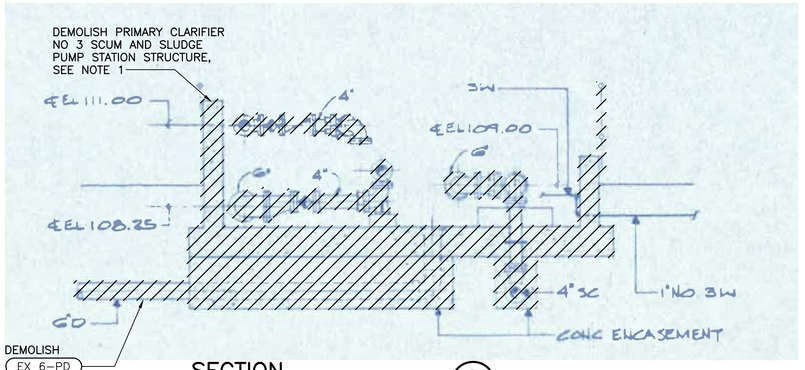


SECTION
3/8" = 1'-0"

GENERAL NOTES:

1. DEMOLISH ENTIRE CONCRETE SCUM AND SLUDGE PUMP STATION STRUCTURE, SLUDGE AND SCUM PUMPS, PIPING AND ASSOCIATED APPURTENANCES, GUARDRAILS, AND ALL ELECTRICAL EQUIPMENT.

FILE: 215786-23D101.dwg
DATE: Oct 07, 2015-4:42:37am, rsnider

HDR Engineering, Inc.

| ISSUE | DATE | DESCRIPTION |
|---|---|---|
| A | JUNE 2015 | ISSUED FOR BID |

| | |
|---|---|
| PROJECT MANAGER | C. OLSON |
| DESIGNED | T. KONTONICKAS |
| DESIGNED | |
| CHECKED | C. OLSON |
| DRAWN | M. FOYLE |
| DATE | JUNE 30, 2015 |
| PROJECT NUMBER | 215786 |

REGISTERED PROFESSIONAL ENGINEER
CRAIG A. OLSON
NO. 39819
EXP. 12/31/15
CIVIL
STATE OF CALIFORNIA
06-30-15

CITY OF PINOLE CALIFORNIA 1903

PINOLE/HERCULES
WATER POLLUTION
CONTROL PLANT UPGRADE
CLIENT PN

**DEMOLITION**
**PRIMARY CLARIFIER NO 3**
**SCUM AND SLUDGE SLUDGE PUMP STATION**
**PLAN AND SECTIONS**

0 1" 2"

| | |
|---|---|
| FILENAME | 215786-23D101 |
| SCALE | NONE |

SHEET
**23D101**

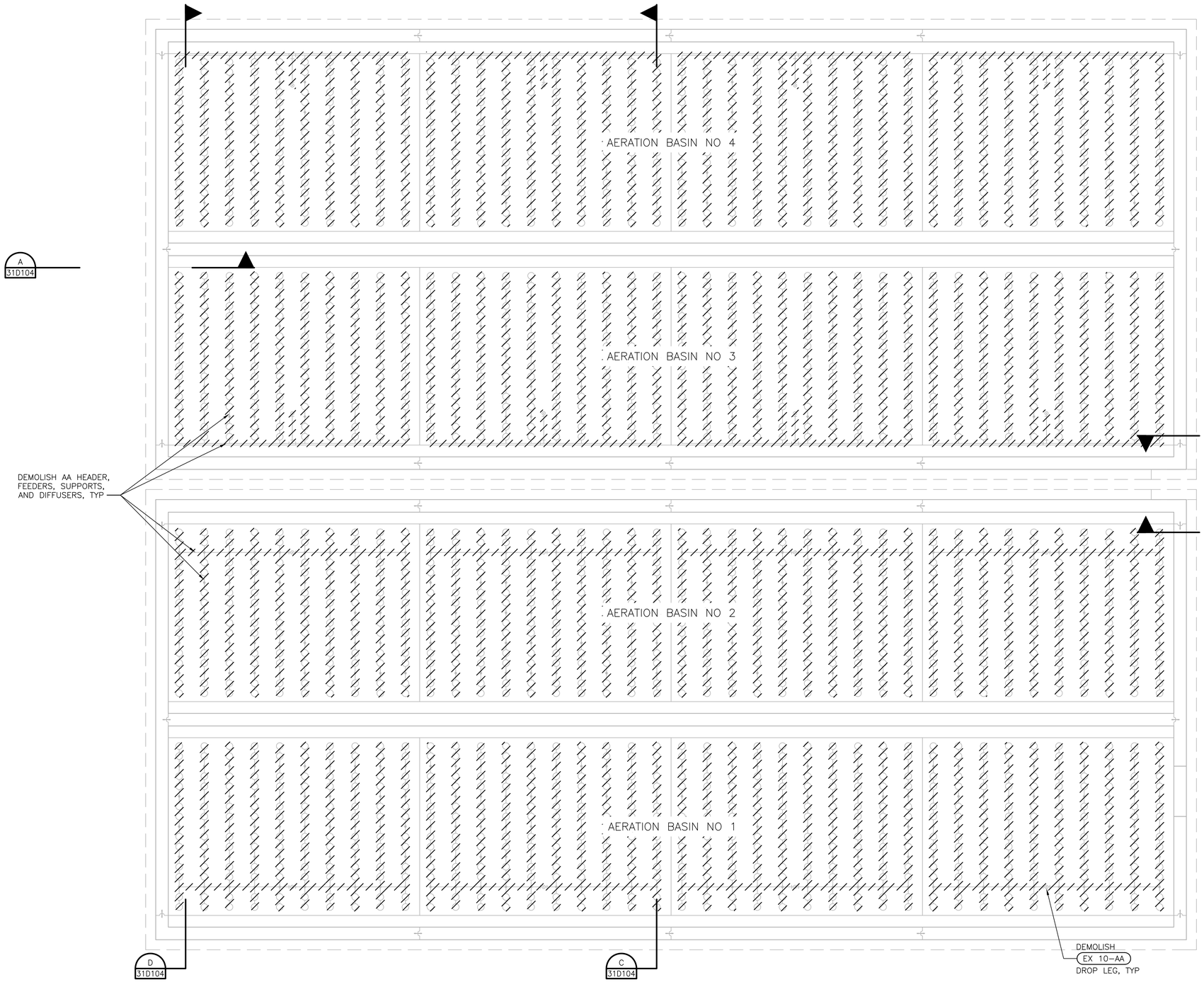


FILE: 215786-31D101.dwg
DATE: Oct 07, 2015-4:44:24pm, rsnider

HDR Engineering, Inc.

| ISSUE | DATE | DESCRIPTION |
|---|---|---|
| A | JUNE 2015 | ISSUED FOR BID |

| | |
|---|---|
| PROJECT MANAGER | C. OLSON |
| DESIGNED | T. KONTONICKAS |
| DESIGNED | |
| CHECKED | C. OLSON |
| DRAWN | B.DOWN |
| DATE | JUNE 30, 2015 |
| PROJECT NUMBER | 215786 |

REGISTERED PROFESSIONAL ENGINEER
CRAIG A. OLSON
NO. 39819
EXP. 12/31/15
CIVIL
STATE OF CALIFORNIA
06-30-15

CITY OF PINOLE CALIFORNIA 1903

PINOLE/HERCULES
WATER POLLUTION
CONTROL PLANT UPGRADE
CLIENT PN

**DEMOLITION**

**AERATION BASINS**
**PLAN AT ELEVATION 100.00**

0 1" 2"

| | |
|---|---|
| FILENAME | 215786-31D101 |
| SCALE | 3/16" = 1'-0" |

SHEET
**31D101**

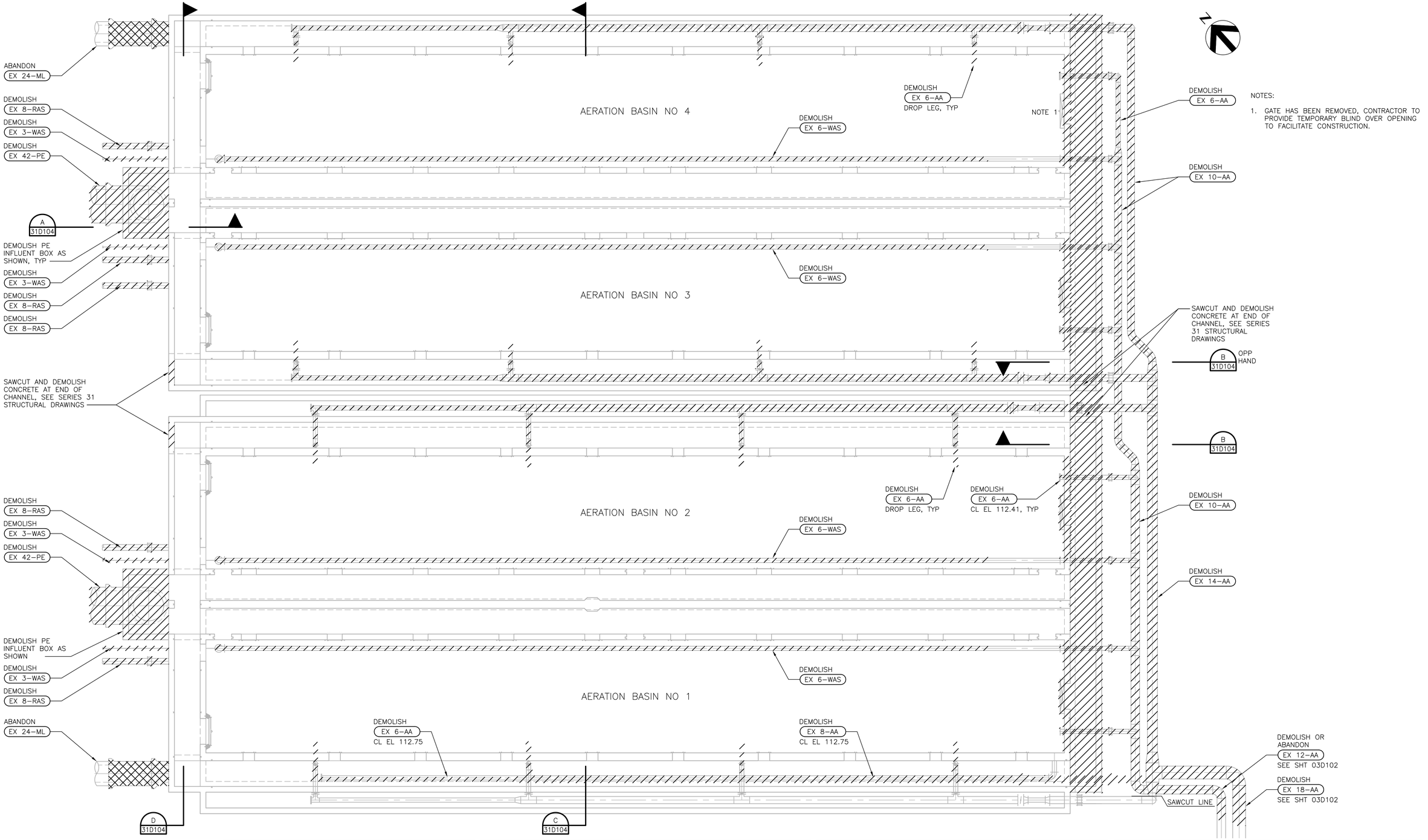


NOTES:

1. GATE HAS BEEN REMOVED, CONTRACTOR TO PROVIDE TEMPORARY BLIND OVER OPENING TO FACILITATE CONSTRUCTION.

FILE: 215786-31D102.dwg
DATE: Oct 07, 2015-4:44:30am, rsnider

HDR Engineering, Inc.

| ISSUE | DATE | DESCRIPTION |
|---|---|---|
| A | JUNE 2015 | ISSUED FOR BID |

| | |
|---|---|
| PROJECT MANAGER | C. OLSON |
| DESIGNED | T. KONTONICKAS |
| DESIGNED | |
| CHECKED | C. OLSON |
| DRAWN | B. DOWN |
| DATE | JUNE 30, 2015 |
| PROJECT NUMBER | 215786 |

REGISTERED PROFESSIONAL ENGINEER
CRAIG A. OLSON
NO. 39819
EXP. 12/31/15
CIVIL
STATE OF CALIFORNIA
06-30-15

CITY OF PINOLE CALIFORNIA 1903

PINOLE/HERCULES
WATER POLLUTION
CONTROL PLANT UPGRADE
CLIENT PN

# DEMOLITION

## AERATION BASINS PLAN AT ELEVATION 112.0

0 1" 2"

| | |
|---|---|
| FILENAME | 215786-31D102 |
| SCALE | 3/16" = 1'-0" |

SHEET
**31D102**

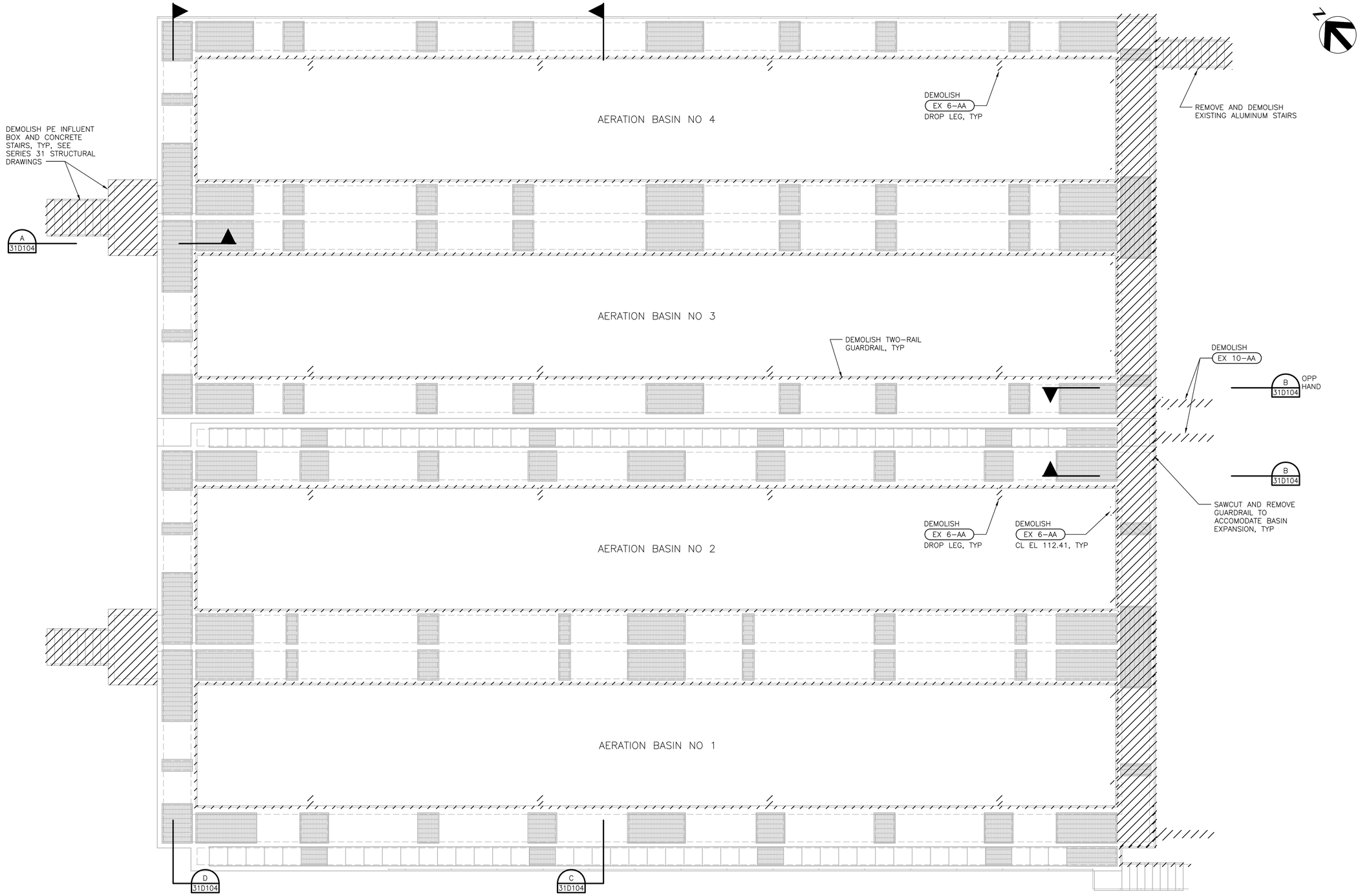


FILE: 215786-31D103.dwg
DATE: Oct 07, 2015-4:44:36am, rsnider

HDR Engineering, Inc.

| ISSUE | DATE | DESCRIPTION |
|---|---|---|
| A | JUNE 2015 | ISSUED FOR BID |

| | |
|---|---|
| PROJECT MANAGER | C. OLSON |
| DESIGNED | T. KONTONICKAS |
| DESIGNED | |
| CHECKED | C. OLSON |
| DRAWN | B. DOWN |
| DATE | JUNE 30, 2015 |
| PROJECT NUMBER | 215786 |

REGISTERED PROFESSIONAL ENGINEER
CRAIG A. OLSON
NO. 39819
EXP. 12/31/15
CIVIL
STATE OF CALIFORNIA
06-30-15

CITY OF PINOLE CALIFORNIA 1903

PINOLE/HERCULES
WATER POLLUTION
CONTROL PLANT UPGRADE
CLIENT PN

**DEMOLITION**

**AERATION BASINS**
**PLAN AT ELEVATION 115.00**

0 1" 2"

| | |
|---|---|
| FILENAME | 215786-31D103 |
| SCALE | 3/16" = 1'-0" |

SHEET
**31D103**

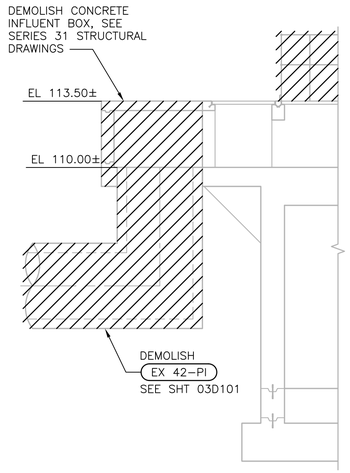


## SECTION
1/4" = 1'-0"
A 31D101

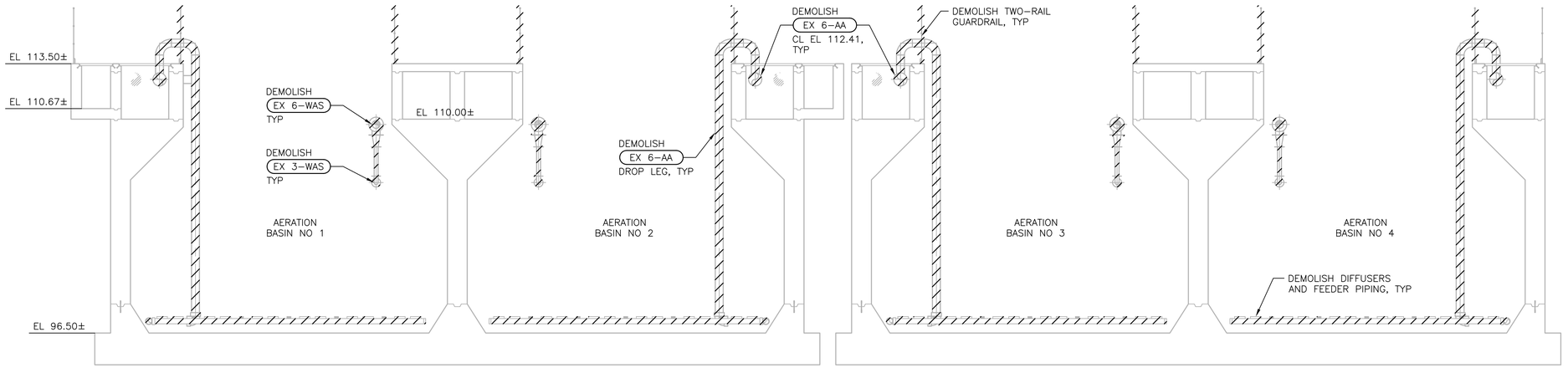


## SECTION
1/4" = 1'-0"
C 31D101




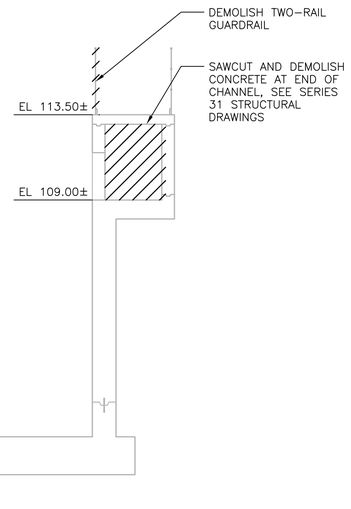


## SECTION
1/4" = 1'-0"
B 31D101

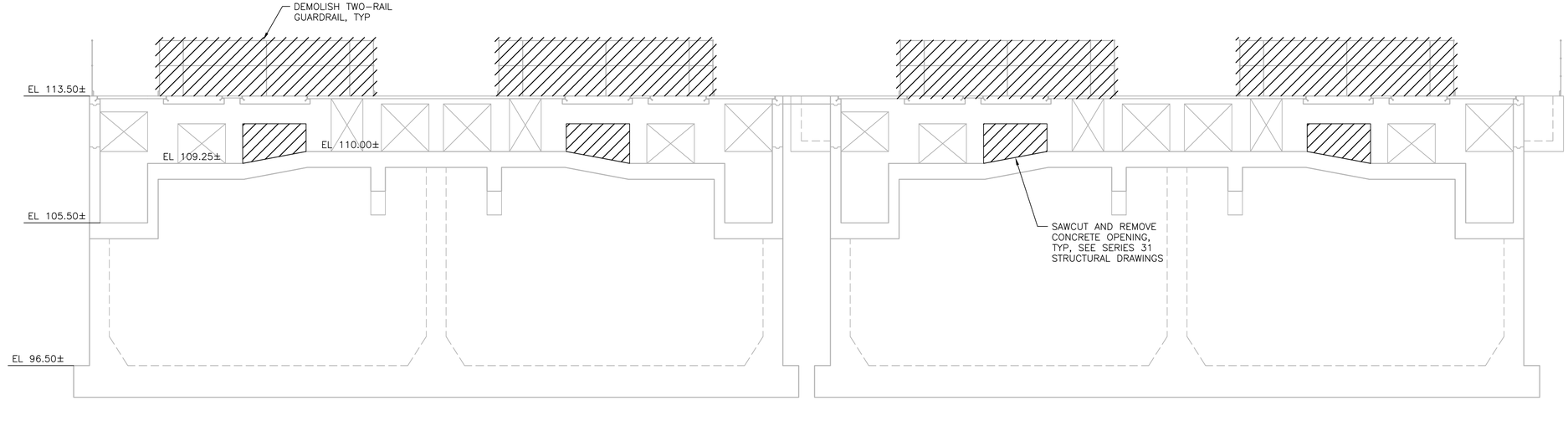


## SECTION
1/4" = 1'-0"
D 31D101

FILE: 215786-31D104.dwg
DATE: Oct 07, 2015-4:44:44pm, rsnider

HDR Engineering, Inc.

| ISSUE | DATE | DESCRIPTION |
|---|---|---|
| A | JUNE 2015 | ISSUED FOR BID |

| | |
|---|---|
| PROJECT MANAGER | C. OLSON |
| DESIGNED | T. KONTONICKAS |
| DESIGNED | |
| CHECKED | C. OLSON |
| DRAWN | B. DOWN |
| DATE | JUNE 30, 2015 |
| PROJECT NUMBER | 215786 |

REGISTERED PROFESSIONAL ENGINEER
CRAIG A. OLSON
NO. 39819
EXP. 12/31/15
CIVIL
STATE OF CALIFORNIA
04-30-15

CITY OF PINOLE CALIFORNIA 1903

PINOLE/HERCULES
WATER POLLUTION
CONTROL PLANT UPGRADE
CLIENT PN

**DEMOLITION**

**AERATION BASINS SECTIONS**

0 1" 2"

| | |
|---|---|
| FILENAME | 215786-31D104 |
| SCALE | 1/4" = 1'-0" |

SHEET **31D104**

PHOTOGRAPH 1
NTS
31D103

PHOTOGRAPH 2
NTS
31D103

PHOTOGRAPH 3
NTS
31D103

FILE: 215786–31D105.dwg
DATE: Oct 07, 2015–4:44:55pm, rsnider

HDR Engineering, Inc.

| ISSUE | DATE | DESCRIPTION |
|---|---|---|
| | | |
| | | |
| | | |
| | | |
| | | |
| | | |
| | | |
| A | JUNE 2015 | ISSUED FOR BID |

| | |
|---|---|
| PROJECT MANAGER | C. OLSON |
| | |
| DESIGNED | T. KONTONICKAS |
| DESIGNED | |
| CHECKED | C. OLSON |
| DRAWN | B. DOWN |
| DATE | JUNE 30, 2015 |
| | |
| PROJECT NUMBER | 215786 |

REGISTERED PROFESSIONAL ENGINEER
CRAIG A. OLSON
NO. 39819
EXP. 12/31/15
CIVIL
STATE OF CALIFORNIA
06-30-15

CITY OF PINOLE CALIFORNIA 1903

PINOLE/HERCULES
WATER POLLUTION
CONTROL PLANT UPGRADE
CLIENT PN

**DEMOLITION**

**AERATION BASINS PHOTOGRAPHS**

0 1" 2"

| | |
|---|---|
| FILENAME | 215786–31D105 |
| SCALE | AS NOTED |

SHEET
**31D105**

GENERAL NOTES:

1. DEMOLISH ENTIRE CONCRETE STRUCTURE, FOUR WEIR PLATES, STOP GATE, GRATING, GUARDRAILS, ALL APPURTENANCES, AND PIPING AS SHOWN.
2. DEMOLITION WORK FOR PIPING OTHER THAN THAT ASSOCIATED WITH SERIES 32 IS NOT REFLECTED ON THIS SHEET. REFER TO SHEET 03D101 FOR OTHER PIPING IN THIS AREA.

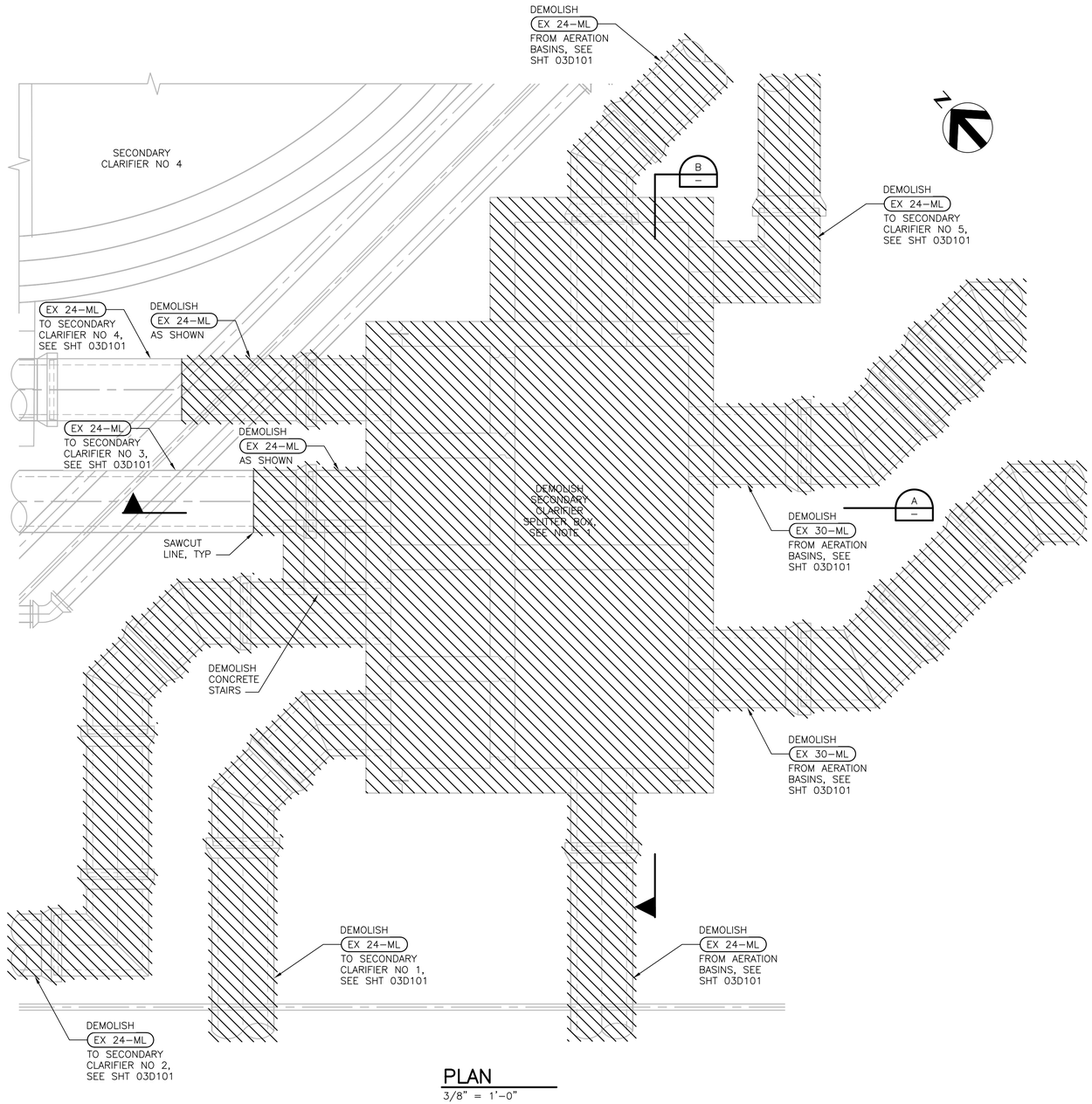


PLAN
3/8" = 1'-0"

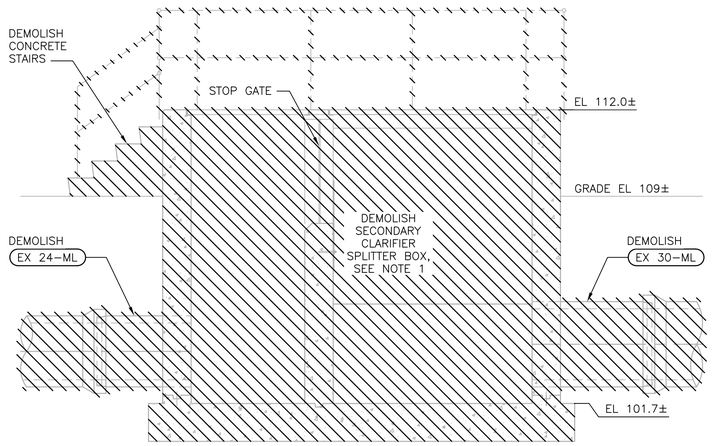


SECTION A
3/8" = 1'-0"

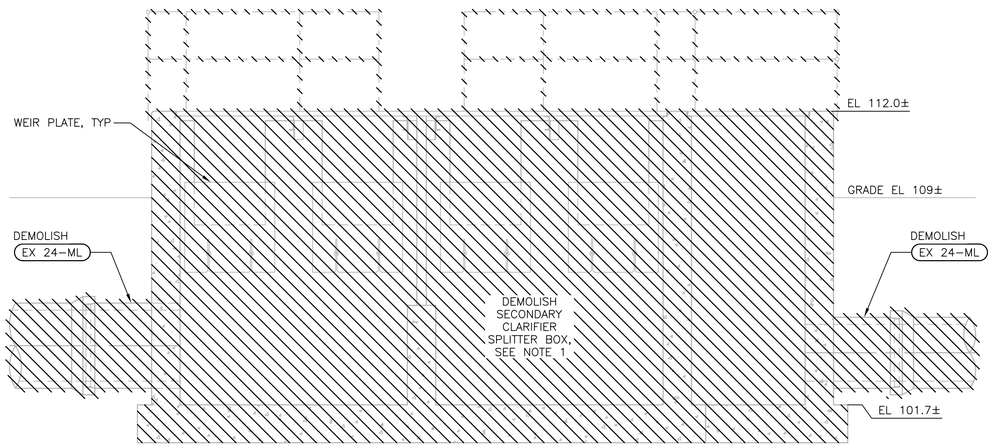


SECTION B
3/8" = 1'-0"

FILE: 215786-32D101.dwg
DATE: Oct 07, 2015-4:46:41am, rsnider

HDR
HDR Engineering, Inc.

| ISSUE | DATE | DESCRIPTION |
|---|---|---|
| A | JUNE 2015 | ISSUED FOR BID |

| | |
|---|---|
| PROJECT MANAGER | C. OLSON |
| DESIGNED | T. KONTONICKAS |
| DESIGNED | |
| CHECKED | C. OLSON |
| DRAWN | B. DOWN |
| DATE | JUNE 30, 2015 |
| PROJECT NUMBER | 215786 |

REGISTERED PROFESSIONAL ENGINEER
CRAIG A. OLSON
NO. 39819
EXP. 12/31/15
CIVIL
STATE OF CALIFORNIA
06-30-15

CITY OF PINOLE CALIFORNIA 1903

PINOLE/HERCULES
WATER POLLUTION
CONTROL PLANT UPGRADE
CLIENT PN

**DEMOLITION**

**SECONDARY CLARIFIER SPLITTER BOX PLAN AND SECTIONS**

0 1" 2"

| | |
|---|---|
| FILENAME | 215786-32D101 |
| SCALE | NONE |

SHEET
32D101

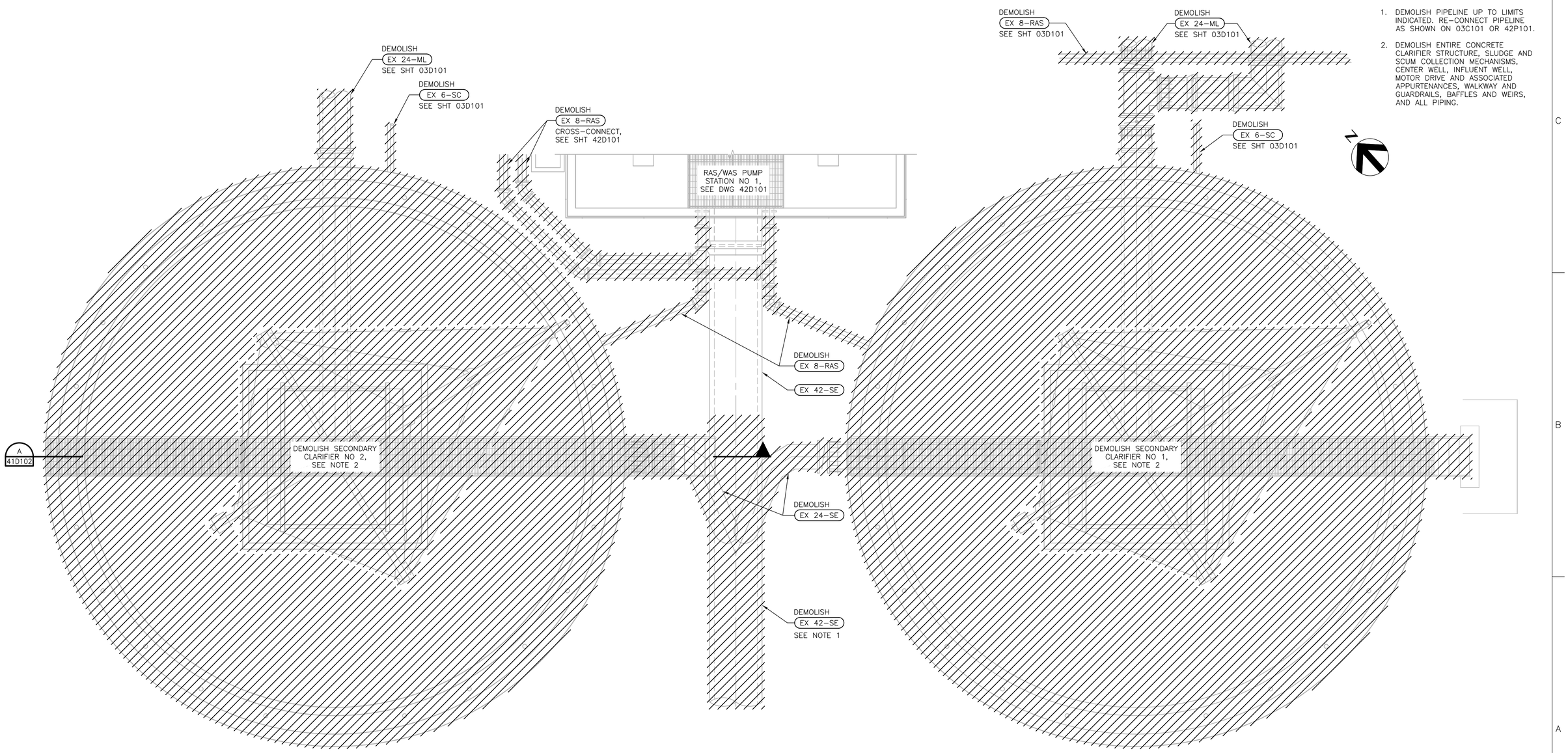


PLAN
1/4" = 1'-0"

GENERAL NOTES:

1. DEMOLISH PIPELINE UP TO LIMITS INDICATED. RE–CONNECT PIPELINE AS SHOWN ON 03C101 OR 42P101.
2. DEMOLISH ENTIRE CONCRETE CLARIFIER STRUCTURE, SLUDGE AND SCUM COLLECTION MECHANISMS, CENTER WELL, INFLUENT WELL, MOTOR DRIVE AND ASSOCIATED APPURTENANCES, WALKWAY AND GUARDRAILS, BAFFLES AND WEIRS, AND ALL PIPING.

FILE: 215786–41D101.dwg
DATE: Oct 07, 2015–4:47:39pm, ranider

HDR Engineering, Inc.

| ISSUE | DATE | DESCRIPTION |
|---|---|---|
| A | JUNE 2015 | ISSUED FOR BID |

| | |
|---|---|
| PROJECT MANAGER | C. OLSON |
| DESIGNED | T. KONTONICKAS |
| DESIGNED | |
| CHECKED | C. OLSON |
| DRAWN | B. DOWN |
| DATE | JUNE 30, 2015 |
| PROJECT NUMBER | 215786 |

REGISTERED PROFESSIONAL ENGINEER
CRAIG A. OLSON
NO. 39819
EXP. 12/31/15
CIVIL
STATE OF CALIFORNIA
06-30-15

CITY OF PINOLE CALIFORNIA 1903

PINOLE/HERCULES
WATER POLLUTION
CONTROL PLANT UPGRADE
CLIENT PN

**DEMOLITION**

**SECONDARY CLARIFIER NO 1 AND NO 2 PLAN**

0 1" 2"

| | |
|---|---|
| FILENAME | 215786–41D101 |
| SCALE | NONE |

SHEET
**41D101**

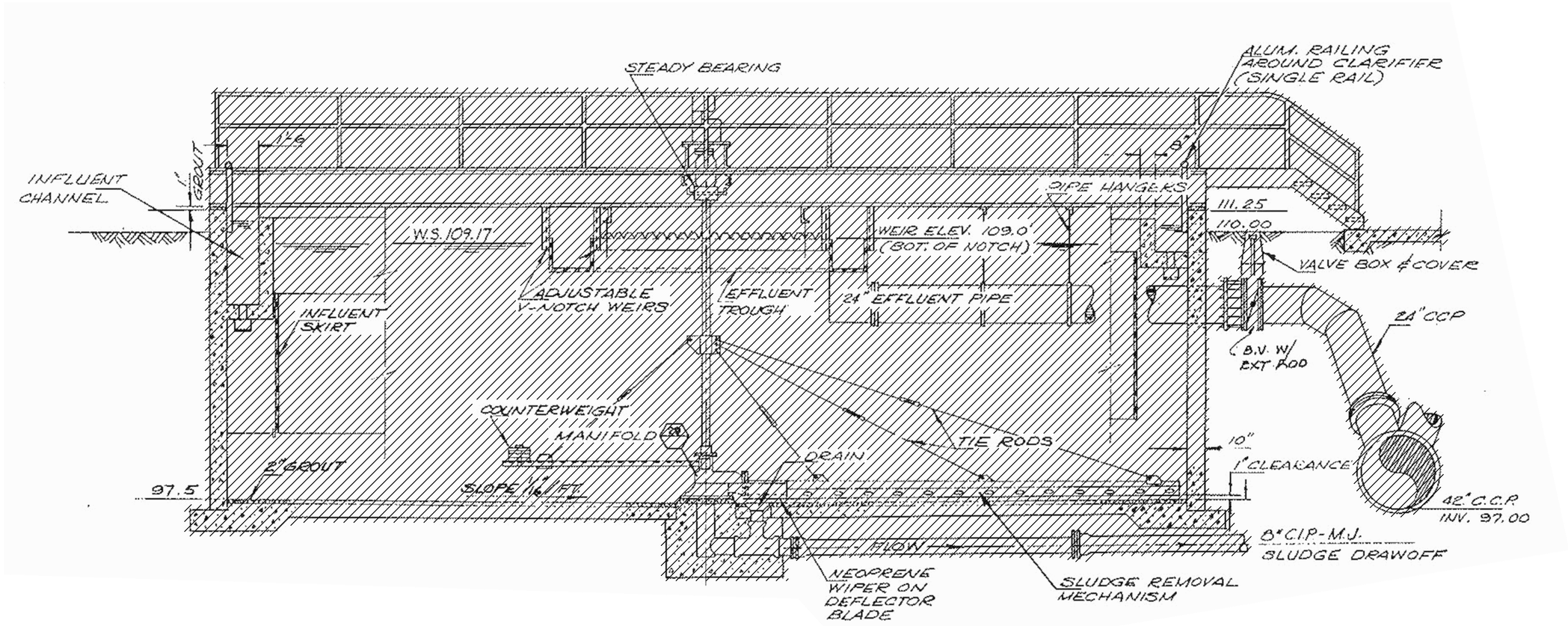


SECTION
3/8" = 1'-0"
A
41D101

FILE: 215786-41D102.dwg
DATE: Oct 07, 2015-4:47:45pm, rsnider

HDR Engineering, Inc.

| ISSUE | DATE | DESCRIPTION |
|---|---|---|
| A | JUNE 2015 | ISSUED FOR BID |

| | |
|---|---|
| PROJECT MANAGER | C. OLSON |
| DESIGNED | T. KONTONICKAS |
| DESIGNED | |
| CHECKED | C. OLSON |
| DRAWN | M. FOYLW |
| DATE | JUNE 30, 2015 |
| PROJECT NUMBER | 215786 |

REGISTERED PROFESSIONAL ENGINEER
CRAIG A. OLSON
NO. 39819
EXP. 12/31/15
CIVIL
STATE OF CALIFORNIA
06-30-15

CITY OF PINOLE CALIFORNIA 1903

PINOLE/HERCULES
WATER POLLUTION
CONTROL PLANT UPGRADE
CLIENT PN

**DEMOLITION**

**SECONDARY CLARIFIER NO 1 AND NO 2**
**TYPICAL SECTION**

0 1" 2"

| | |
|---|---|
| FILENAME | 215786-41D102 |
| SCALE | AS NOTED |

SHEET
**41D102**

GENERAL NOTES:

1. DEMOLISH PIPELINE UP TO LIMITS INDICATED. RE-CONNECT PIPELINE AS SHOWN ON 03C101 OR 42P101.
2. PROVIDE 3" BLIND FLANGE ON RAS LINE TEE.
3. EXACT ROUTING OF EXISTING 8" RAS FROM PUMPS P-471 AND P472 IS NOT DOCUMENTED. DEMOLISH PIPE AS REQUIRED TO PERFORM WORK, AND ABANDON REMAINDER OF PIPELINE.
4. PLUG AND ABANDON PORTION OF 24" ML LOCATED UNDER RAS/WAS PUMP STATION.
5. BLIND FLANGE OR CAP CONNECTION AFTER DEMOLITION OF 3" WAS LINE, FIELD VERIFY CONNECTION TYPE.

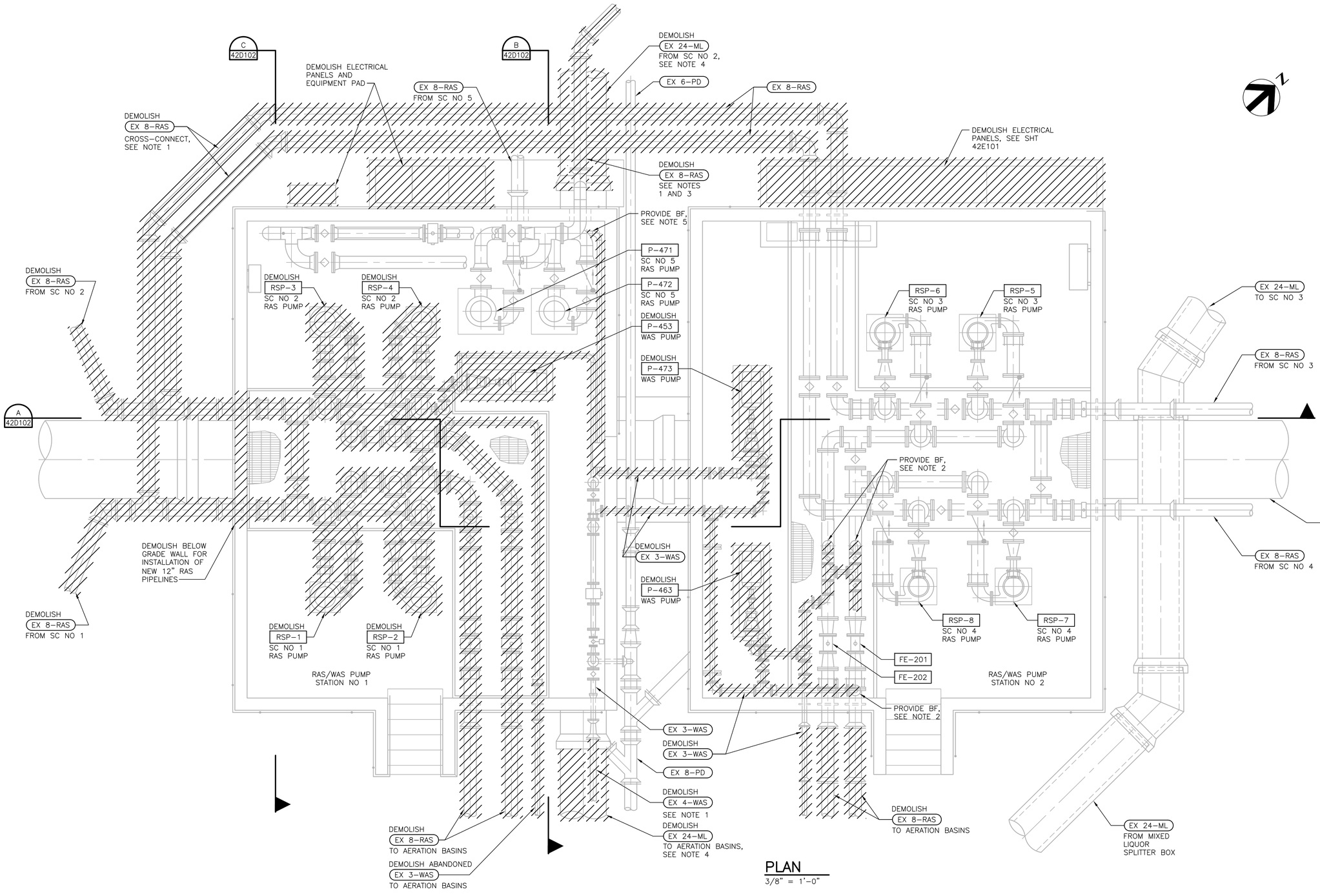


PLAN
3/8" = 1'-0"

FILE: 215786-42D101.dwg
DATE: Oct 07, 2015-4:48:43pm, ranider

HDR Engineering, Inc.

| ISSUE | DATE | DESCRIPTION |
|---|---|---|
| | | |
| | | |
| | | |
| | | |
| | | |
| | | |
| A | JUNE 2015 | ISSUED FOR BID |

| | |
|---|---|
| PROJECT MANAGER | C. OLSON |
| | |
| DESIGNED | T. KONTONICKAS |
| DESIGNED | |
| CHECKED | C. OLSON |
| DRAWN | B. DOWN |
| DATE | JUNE 30, 2015 |
| | |
| PROJECT NUMBER | 215786 |

REGISTERED PROFESSIONAL ENGINEER
CRAIG A. OLSON
NO. 39819
EXP. 12/31/15
CIVIL
STATE OF CALIFORNIA
06-30-15

CITY OF PINOLE CALIFORNIA 1903

PINOLE/HERCULES
WATER POLLUTION
CONTROL PLANT UPGRADE
CLIENT PN

**DEMOLITION**

**RAS/WAS PUMP STATIONS NO 1 AND NO 2 PLAN**

0 1" 2"

| | |
|---|---|
| FILENAME | 215786-42D101 |
| SCALE | AS NOTED |

SHEET **42D101**

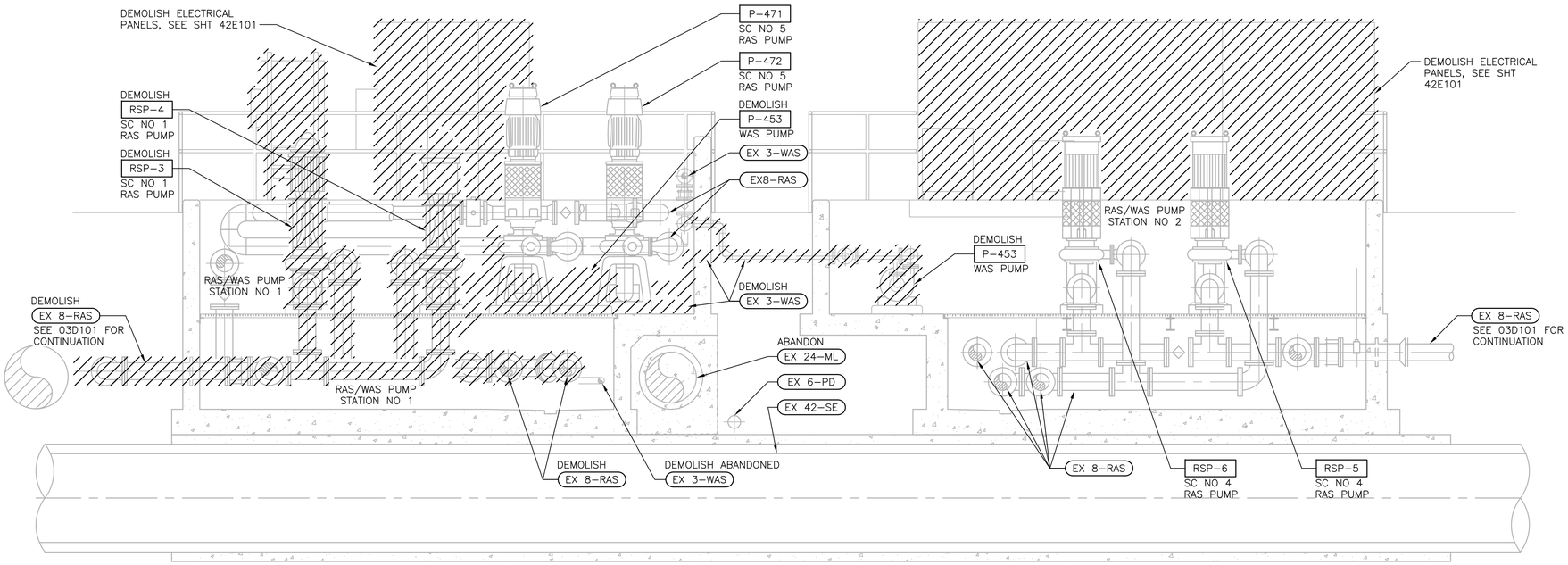


## SECTION
3/8" = 1'-0"
A 42D101

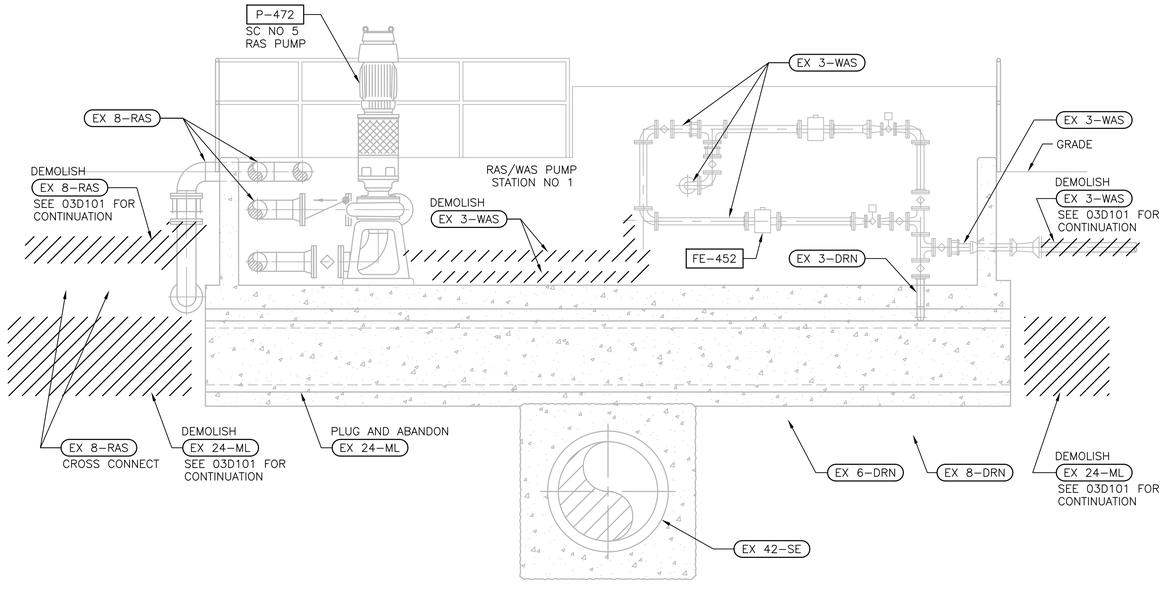


## SECTION
3/8" = 1'-0"
B 42D101

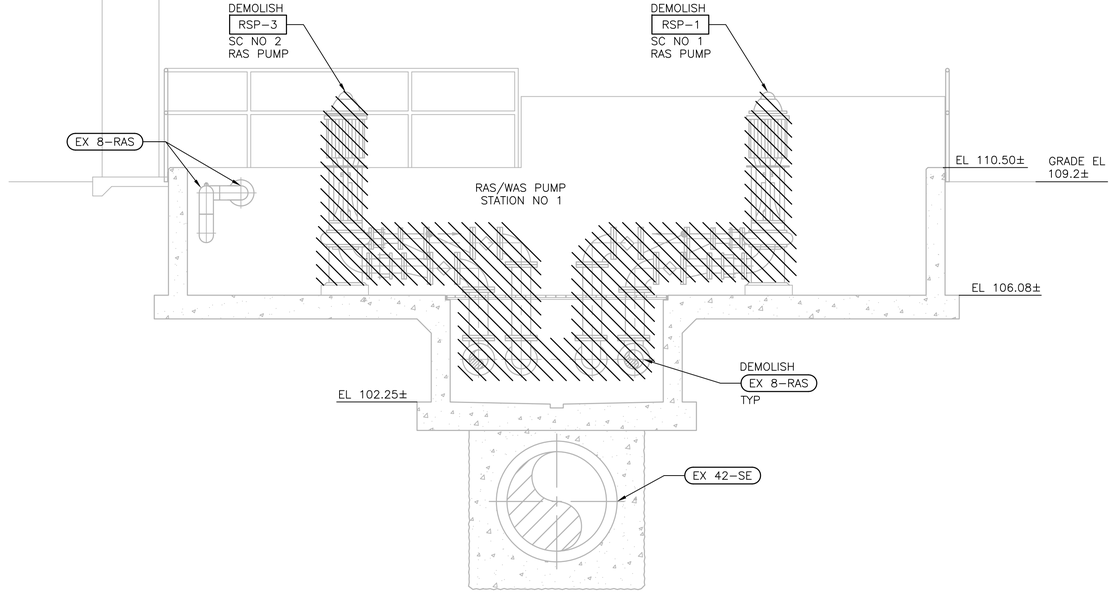


## SECTION
3/8" = 1'-0"
C 42D101

FILE: 215786-42D102.dwg
DATE: Oct 07, 2015-4:48:50am, rsnider

HDR Engineering, Inc.

| ISSUE | DATE | DESCRIPTION |
|---|---|---|
| | | |
| | | |
| | | |
| | | |
| | | |
| | | |
| A | JUNE 2015 | ISSUED FOR BID |

| | |
|---|---|
| PROJECT MANAGER | C. OLSON |
| | |
| DESIGNED | T. KONTONICKAS |
| DESIGNED | |
| CHECKED | C. OLSON |
| DRAWN | B. DOWN |
| DATE | JUNE 30, 2015 |
| | |
| PROJECT NUMBER | 215786 |

REGISTERED PROFESSIONAL ENGINEER
CRAIG A. OLSON
NO. 39819
EXP. 12/31/15
CIVIL
STATE OF CALIFORNIA
06-30-15

CITY OF PINOLE CALIFORNIA 1903

PINOLE/HERCULES
WATER POLLUTION
CONTROL PLANT UPGRADE
CLIENT PN

**DEMOLITION**

**RAS/WAS PUMP STATIONS NO 1 AND NO 2 SECTIONS**

0 1" 2"

| | |
|---|---|
| FILENAME | 215786-42D102 |
| SCALE | AS NOTED |

SHEET **42D102**

GENERAL NOTES:

1. DEMOLISH CONCRETE EQUIPMENT PADS, BLOWERS, MOTORS, CONDUITS AND WIRES FOR BLOWERS 4, 5 AND 6.
2. DEMOLISH AIR FILTER, CONCRETE SUPPORTS, AND ASSOCIATED CONDUITS AND WIRES.
3. ALL UNUSED EXPOSED ELECTRICAL CONDUIT IS TO BE REMOVED ALONG WITH UNUSED CONDUCTORS. EMBEDDED ELECTRICAL CONDUITS ARE TO BE CUT OFF FLUSH WHERE THEY EMERGE FROM CONCRETE, PLUGGED WITH GROUT, AND PAINTED.
4. 12" AA IS CURRENTLY ABANDONED. DEMOLISH ANY REMAINING PIPE AS REQUIRED TO PERFORM WORK. ABANDON OR DEMOLISH ANY REMAINING PIPELINE.

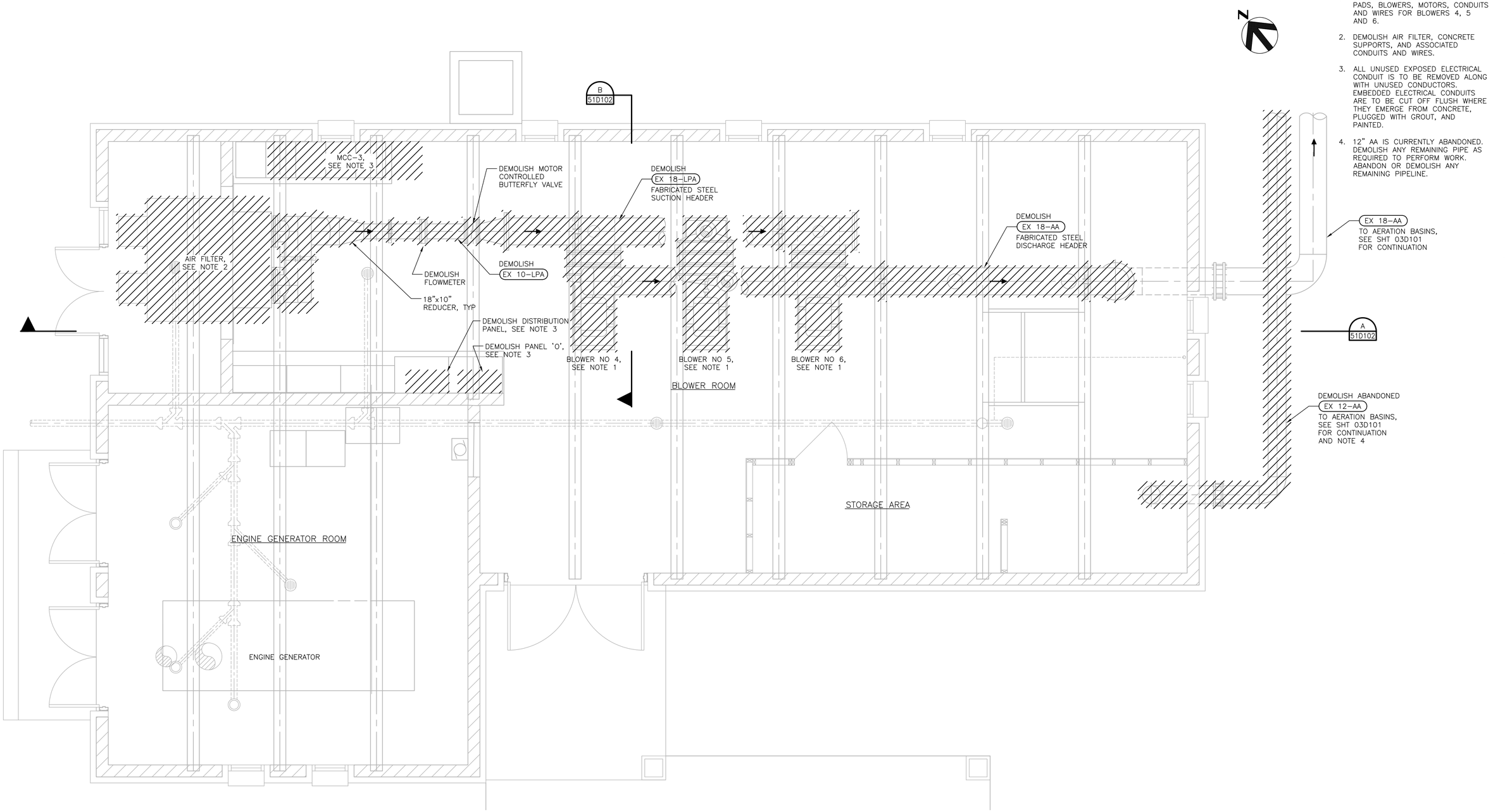


PLAN
3/16" = 1'-0"

FILE: 215786-51D101.dwg
DATE: Oct 07, 2015-4:49:39pm, rsnider

HDR Engineering, Inc.

| ISSUE | DATE | DESCRIPTION |
|---|---|---|
| A | JUNE 2015 | ISSUED FOR BID |

| | |
|---|---|
| PROJECT MANAGER | C. OLSON |
| DESIGNED | T. KONTONICKAS |
| DESIGNED | |
| CHECKED | C. OLSON |
| DRAWN | B. DOWN |
| DATE | JUNE 30, 2015 |
| PROJECT NUMBER | 215786 |

REGISTERED PROFESSIONAL ENGINEER
CRAIG A. OLSON
NO. 39819
EXP. 12/31/15
CIVIL
STATE OF CALIFORNIA
06-30-15

CITY OF PINOLE CALIFORNIA 1903

PINOLE/HERCULES
WATER POLLUTION
CONTROL PLANT UPGRADE
CLIENT PN

**DEMOLITION**

**BLOWER BUILDING PLAN**

0 1" 2"

| | |
|---|---|
| FILENAME | 215786-51D101 |
| SCALE | NONE |

SHEET
**51D101**

GENERAL NOTES:

1. DEMOLISH CONCRETE EQUIPMENT PADS, BLOWERS, MOTORS, CONDUITS AND WIRES FOR BLOWERS 4, 5 AND 6.
2. DEMOLISH AIR FILTER, CONCRETE SUPPORTS, AND ASSOCIATED CONDUITS AND WIRES.
3. ALL UNUSED EXPOSED ELECTRICAL CONDUIT IS TO BE REMOVED ALONG WITH UNUSED CONDUCTORS. EMBEDDED ELECTRICAL CONDUITS ARE TO BE CUT OFF FLUSH WHERE THEY EMERGE FROM CONCRETE, PLUGGED WITH GROUT, AND PAINTED.

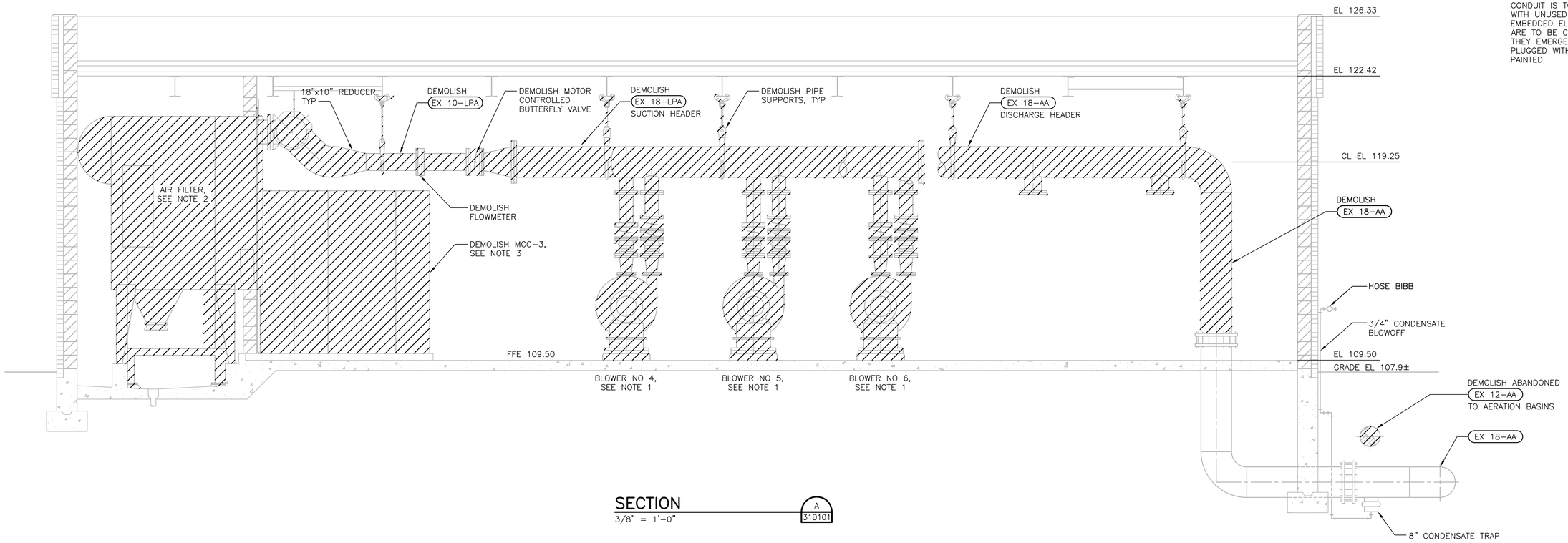


SECTION A
3/8" = 1'-0"
31D101

FILE: 215786-51D102.dwg
DATE: Oct 07, 2015-4:49:45pm, rsnider

HDR Engineering, Inc.

| ISSUE | DATE | DESCRIPTION |
|---|---|---|
| A | JUNE 2015 | ISSUED FOR BID |

| | |
|---|---|
| PROJECT MANAGER | C. OLSON |
| DESIGNED | T. KONTONICKAS |
| DESIGNED | |
| CHECKED | C. OLSON |
| DRAWN | B. DOWN |
| DATE | JUNE 30, 2015 |
| PROJECT NUMBER | 215786 |

REGISTERED PROFESSIONAL ENGINEER
CRAIG A. OLSON
NO. 39819
EXP. 12/31/15
CIVIL
STATE OF CALIFORNIA
06-30-15

CITY OF PINOLE CALIFORNIA 1903

PINOLE/HERCULES
WATER POLLUTION
CONTROL PLANT UPGRADE
CLIENT PN

**DEMOLITION**

**BLOWER BUILDING SECTIONS**

0 1" 2"

| | |
|---|---|
| FILENAME | 215786-51D102 |
| SCALE | AS NOTED |

SHEET
**51D102**

PLUG PENETRATION WITH NON-SHRINK GROUT

DEMOLISH EX 8-PD SEE NOTE 4

DEMOLISH EX 2-2W SEE NOTE 4

DEMOLISH CONCRETE SOLIDS THICKENING AND DEWATERING STRUCTURE

DEMOLISH EX 0.5-CLS SEE NOTE 4

SALVAGE AND RELOCATE CENTRIFUGE AND ASSOCIATED CONTROL LANEL, SEE SHT 66P101 FOR RELOCATION

DEMOLISH EX 6-DS SEE NOTE 4

DEMOLISH EX 4-PSL SEE NOTE 4

A 61D102

DEMOLISH DEACTIVATED CENTRIFUGE, SEE NOTE 3

DEMOLISH MANHOLE

SALVAGE AND RELOCATE ROTATING DRUM THICKENER, SEE SHT 66P101

DEMOLISH METAL ACCESS LADDER AND PLATFORM

DEMOLISH EX 4-TS SEE NOTE 4

DEMOLISH THICKENED SLUDGE PUMPS, SEE NOTE 2

DEMOLISH CONCRETE TRUCK RAMP

DEMOLISH EX 6-PD

DEMOLISH CONCRETE TRANSFER PUMP PIT

B 61D102

DEMOLISH EX 6-WAS

DEMOLISH EX 3-SHO

DEMOLISH EX 8-PD

DEMOLISH EX 4-PD

DEMOLISH EX 6-PD

DEMOLISH METAL ACCESS STAIRS

DEMOLISH EX 4-WAS

DEMOLISH CYCLONE CLASSIFIER AND GRIT REMOVAL SYSTEM, SEE NOTE 3

SALVAGE AND RELOCATE RDT BLEND TANK, SEE SHT 66P101

DEMOLISH METAL ACCESS LADDER AND PLATFORM

DEMOLISH LIGHT POLE AND CONDUITS

DEMOLISH ODOR CONTROL SCRUBBER, SEE NOTE 4

DEMOLISH METAL ACCESS LADDER AND PLATFORM

DEMOLISH EX 3-SHO SEE SHT 66D101 FOR CONTINUATION

POLYMER BUILDING, SEE SHT 66D101 FOR DEMOLITION WORK

DEMOLISH EX 1-CA SEE SHT 66D101 FOR CONTINUATION

DEMOLISH CONCRETE GRAVITY SLUDGE THICKENER, SEE NOTE 1

CITY PUBLIC WORKS BUILDING

SEE SHT 66D101 FOR CONTINUATION

DEMOLISH 27'x22' CONCRETE CONTAINMENT STRUCTURE INCLUDING RAISED CONCRETE TANK PAD

DEMOLISH EMPTY INSULATED POLYETHYLENE STORAGE TANK INCLUDING SEISMIC RESTRAINT TIE-DOWNS

DEMOLISH EX 1-CA

DEMOLISH EX 0.5-POLY

DEMOLISH EX 10-OA

N

GENERAL NOTES:

1. DEMOLISH CONCRETE TANK, STAIRS, RAILINGS, WALKWAYS, AND ALL INTERIOR EQUIPMENT INCLUDING SLUDGE RAKE ARMS, CENTER WELL,DRIVE MOTOR, CONTROL PANELS, AND ALL PIPING, VALVES, AND APPURTENANCES, AND ALL ASSOCIATED CONTROL PANELS AND ELECTRICAL EQUIPMENT.
2. DEMOLISH THREE SLUDGE THICKENING TRANSFER PUMPS, ALL ASSOCIATED PIPING, VALVES, AND APPURTENANCES, AND ALL ASSOCIATED CONTROL PANELS AND ELECTRICAL EQUIPMENT.
3. DEMOLISH DEACTIVATED CENTRIFUGE, CYCLONE CLASSIFIER, AND GRIT REMOVAL SYTSTEM. DEMOLISH ALL ASSOCIATED PIPING, VALVES, APPURTENANCES, AND ASSOCIATED CONTROL PANELS AND ELECTRICAL EQUIPMENT.
4. FOR CONTINUATION OF LINES, SEE SHEET 03D102.

## PLAN
1/4" = 1'-0"

FILE: 215786-61D101.dwg
DATE: Oct 07, 2015-4:51:52am, rsnider

HDR Engineering, Inc.

| ISSUE | DATE | DESCRIPTION |
|---|---|---|
| A | JUNE 2015 | ISSUED FOR BID |

| | |
|---|---|
| PROJECT MANAGER | C. OLSON |
| DESIGNED | T. KONTONICKAS |
| DESIGNED | |
| CHECKED | C. OLSON |
| DRAWN | P. VAN MEURS |
| DATE | JUNE 30, 2015 |
| PROJECT NUMBER | 215786 |

REGISTERED PROFESSIONAL ENGINEER CRAIG A. OLSON NO. 39819 EXP. 12/31/15 CIVIL STATE OF CALIFORNIA 06-30-15

CITY OF PINOLE CALIFORNIA 1903

PINOLE/HERCULES WATER POLLUTION CONTROL PLANT UPGRADE CLIENT PN

**DEMOLITION**

**SOLIDS HANDLING AREA PLAN**

0 1" 2"

| | |
|---|---|
| FILENAME | 215786-61D101 |
| SCALE | AS NOTED |

SHEET **61D101**

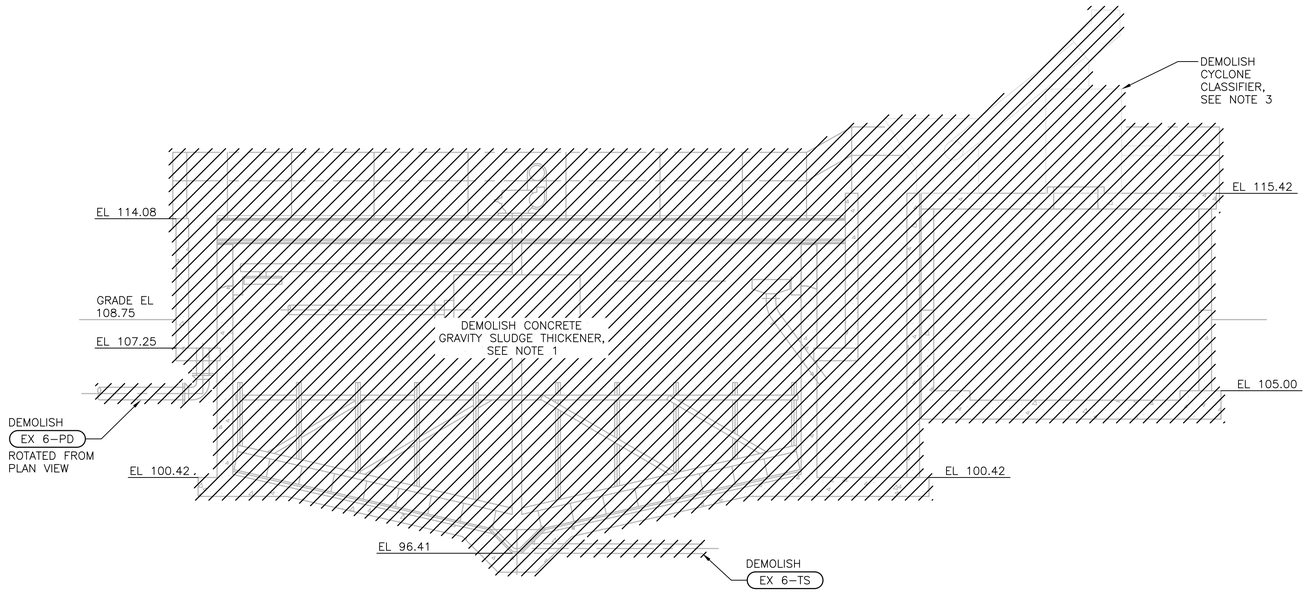


SECTION
1/4" = 1'-0"
A
61D101

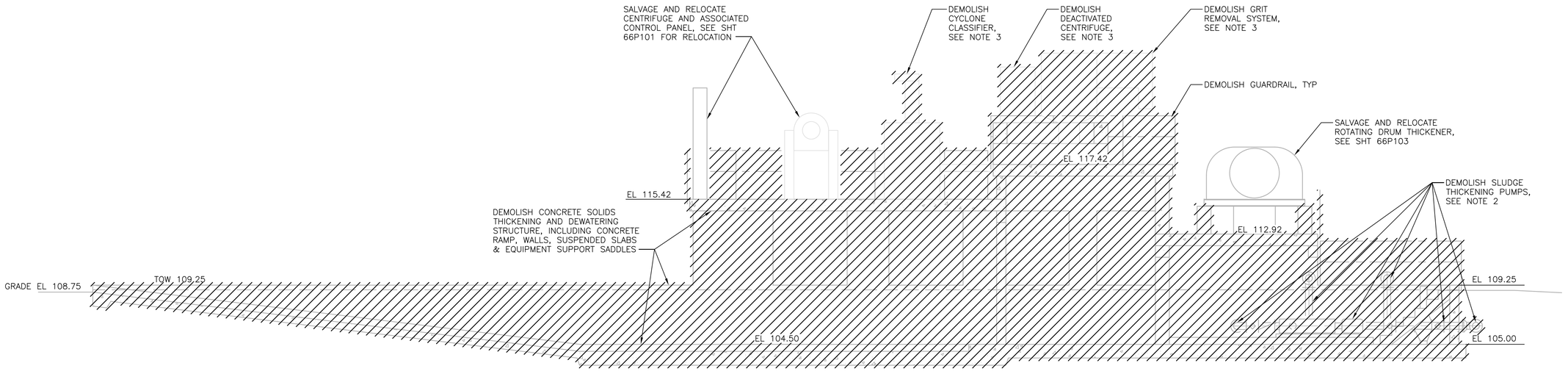


SECTION
1/4" = 1'-0"
B
61D101

GENERAL NOTES:

1. DEMOLISH CONCRETE TANK, STAIRS, RAILINGS, WALKWAYS, AND ALL INTERIOR EQUIPMENT INCLUDING FRP COVER PANELS, SLUDGE RAKE ARMS, CENTER WELL, DRIVE MOTOR, CONTROL PANELS, SCUM TROUGH, ALL PIPING, VALVES, AND APPURTENANCES, AND ALL ASSOCIATED CONTROL PANELS AND ELECTRICAL EQUIPMENT.
2. DEMOLISH THREE SLUDGE THICKENING TRANSFER PUMPS, ALL ASSOCIATED PIPING, VALVES, AND APPURTENANCES, AND ALL ASSOCIATED CONTROL PANELS AND ELECTRICAL EQUIPMENT.
3. DEMOLISH CENTRIFUGE AND ROTATING DRUM THICKENER AND ASSOCIATED CONTROL PANELS. DEMOLISH ALL ASSOCIATED PIPING, VALVES, APPURTENANCES, CONDUITS AND WIRING.

FILE: 215786-61D102.dwg
DATE: Oct 07, 2015-4:51:58pm, rsnider

HDR Engineering, Inc.

| ISSUE | DATE | DESCRIPTION |
|---|---|---|
| | | |
| | | |
| | | |
| | | |
| | | |
| | | |
| A | JUNE 2015 | ISSUED FOR BID |

| | |
|---|---|
| PROJECT MANAGER | C. OLSON |
| | |
| DESIGNED | T. KONTONICKAS |
| DESIGNED | |
| CHECKED | C. OLSON |
| DRAWN | P. VAN MEURS |
| DATE | JUNE 30, 2015 |
| | |
| PROJECT NUMBER | 215786 |

REGISTERED PROFESSIONAL ENGINEER
CRAIG A. OLSON
NO. 39819
EXP. 12/31/15
CIVIL
STATE OF CALIFORNIA
06-30-15

CITY OF PINOLE CALIFORNIA 1903

PINOLE/HERCULES
WATER POLLUTION
CONTROL PLANT UPGRADE
CLIENT PN

**DEMOLITION**

**SOLIDS HANDLING AREA SECTIONS**

0 1" 2"

| | |
|---|---|
| FILENAME | 215786-61D102 |
| SCALE | AS NOTED |

SHEET
**61D102**

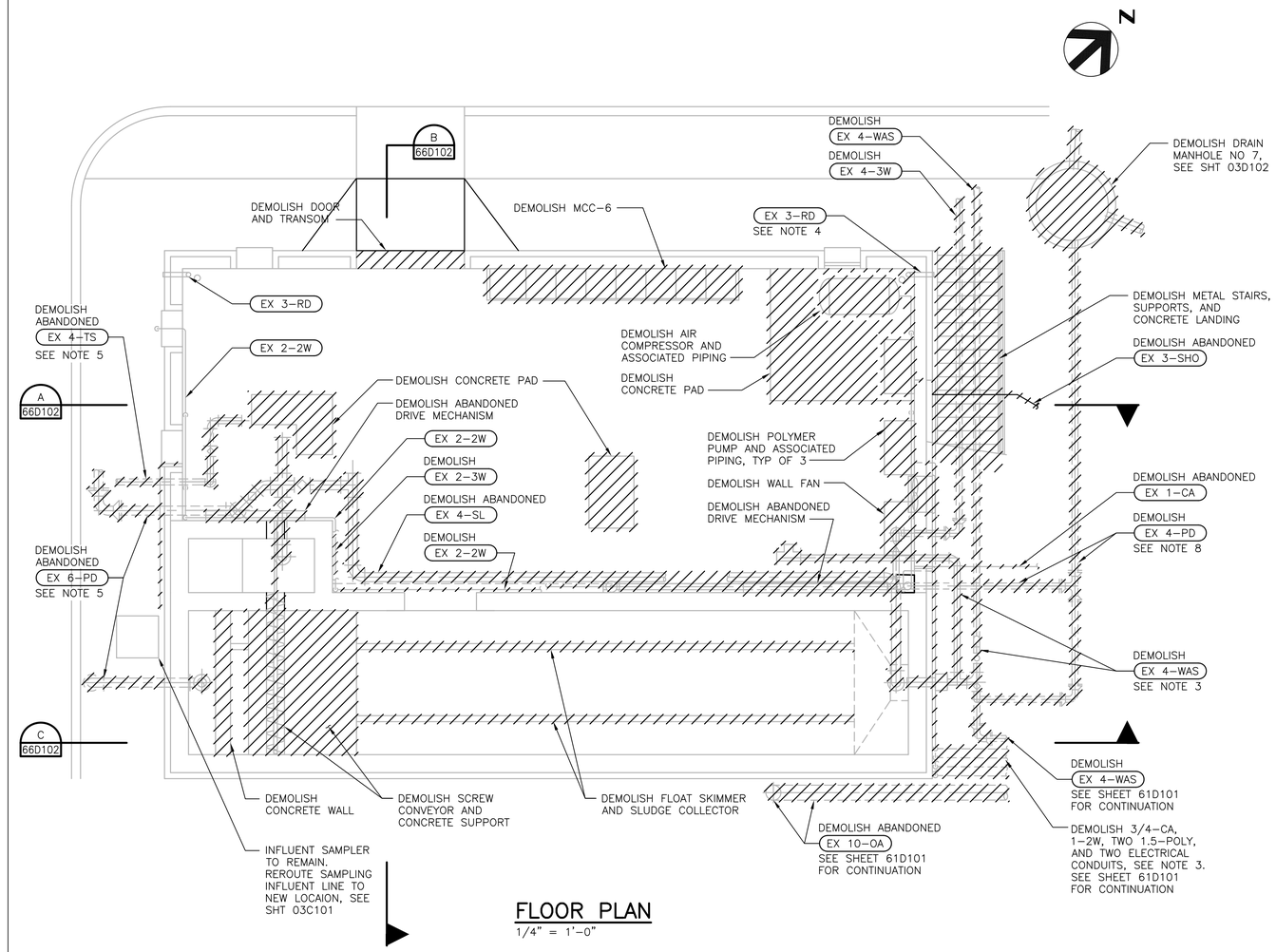


## FLOOR PLAN
1/4" = 1'-0"

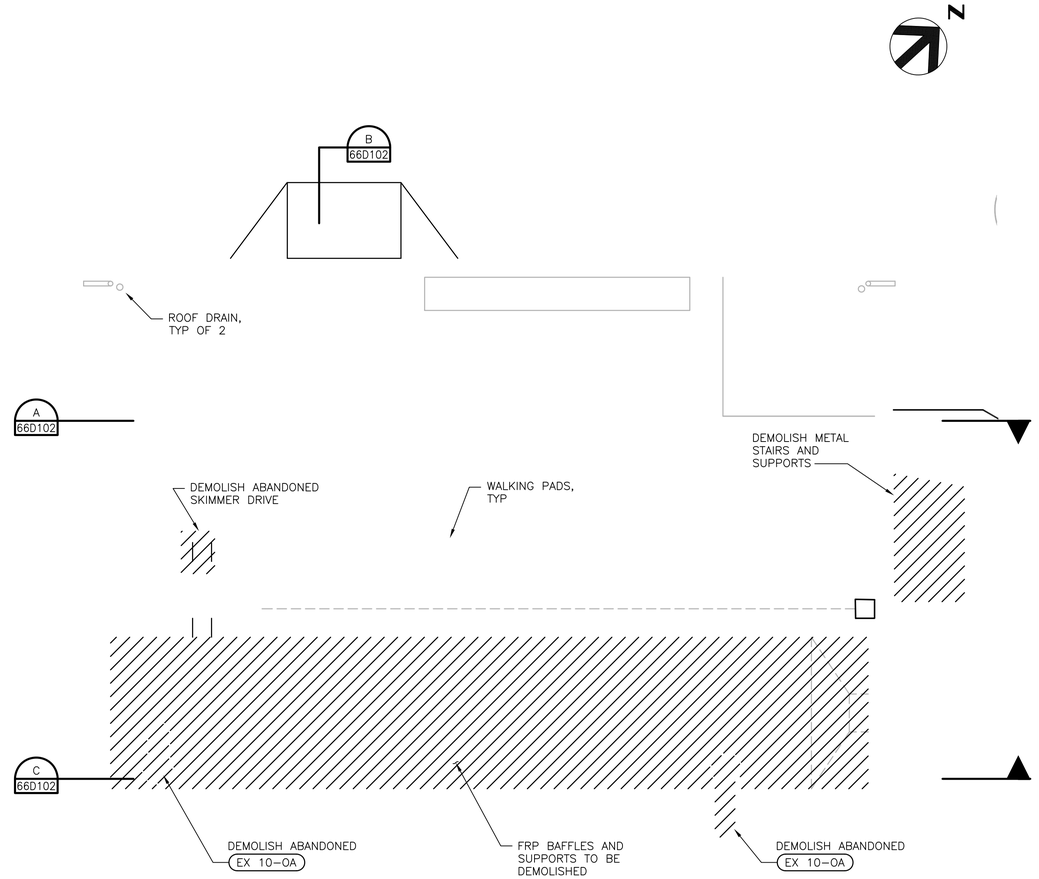


## ROOF PLAN
1/4" = 1'-0"

NOTES:

1. CONCRETE PADS TO BE DEMOLISHED TO 4" BELOW NEW FLOOR LEVEL.
2. ALL ELECTRICAL EQUIPMENT, CONDUITS, AND CONDUCTORS ARE TO BE DEMOLISHED.
3. EXISTING PIPING TO BE DEMOLISHED THAT PENETRATES FLOORS SHALL BE CUT 1" ABOVE EXISTING FLOOR AND FILLED WITH CONCRETE. EXISTING PIPING TO BE DEMOLISHED THAT PENETRATES WALLS SHALL BE CUT FLUSH WITH WALL AND FILLED WITH CONCRETE.
4. VERTICAL PORTION OF 3-RD TO REMAIN. REMOVE OUTLET THROUGH WALL AND PLUG OPENING. MODIFY PER SHEET 66P101 TO EXIT THROUGH WEST WALL.
5. EXISTING PIPING LOCATED IN THE YARD TO BE DEMOLISHED SHALL BE CUT AT CONCRETE ENCASEMENT AND REMOVED. THE PORTION OF PIPE REMAINING UNDER THE EXISTING BUILDING SHALL BE FILLED WITH CONCRETE.
6. EXISTING CORE DRILLS THROUGH WALL FOR PIPING TO BE DEMOLISHED SHALL BE FILLED WITH CONCRETE AFTER REMOVAL OF PIPE.
7. PIPES AND EQUIPMENT TO BE DEMOLISHED SHALL INCLUDE ALL SUPPORTS, VALVES, CONDUITS, AND APPURTENANCES.
8. PIPES ON NORTHEAST SIDE OF EXISTING BUILDING SHALL BE CUT FLUSH WITH WALL AND FILLED WITH CONCRETE.
9. EXISTING POLYMER BUILDING (ORIGINALLY BUILT AS THE DISSOLVED AIR FLOTATION THICKENER) SHALL BE USED AS A MAINTENANCE SHOP.

FILE: 215786-66D101.dwg
DATE: Oct 07, 2015-4:54:36pm, rsnider

HDR Engineering, Inc.

| ISSUE | DATE | DESCRIPTION |
|---|---|---|
| A | JUNE 2015 | ISSUED FOR BID |

| | |
|---|---|
| PROJECT MANAGER | C. OLSON |
| DESIGNED | T. KONTONICKAS |
| DESIGNED | |
| CHECKED | C. OLSON |
| DRAWN | M. FOYLE |
| DATE | JUNE 30, 2015 |
| PROJECT NUMBER | 215786 |

REGISTERED PROFESSIONAL ENGINEER
CRAIG A. OLSON
NO. 39819
EXP. 12/31/15
CIVIL
STATE OF CALIFORNIA
04-30-15

CITY OF PINOLE CALIFORNIA 1903

PINOLE/HERCULES WATER POLLUTION CONTROL PLANT UPGRADE
CLIENT PN

**DEMOLITION**

**POLYMER BUILDING PLAN**

0 1" 2"

| | |
|---|---|
| FILENAME | 215786-66D101 |
| SCALE | AS NOTED |

SHEET **66D101**

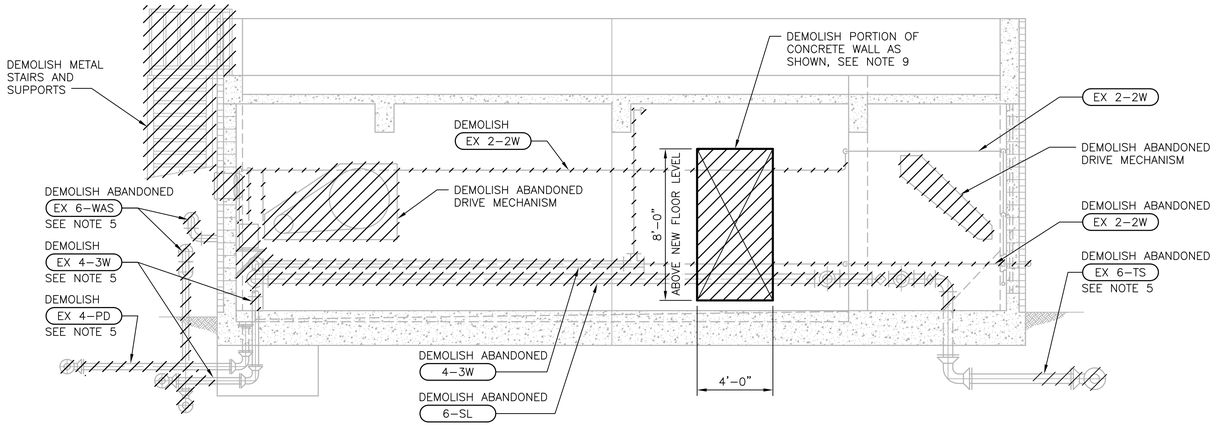


SECTION
1/4" = 1'-0"
A
66D101

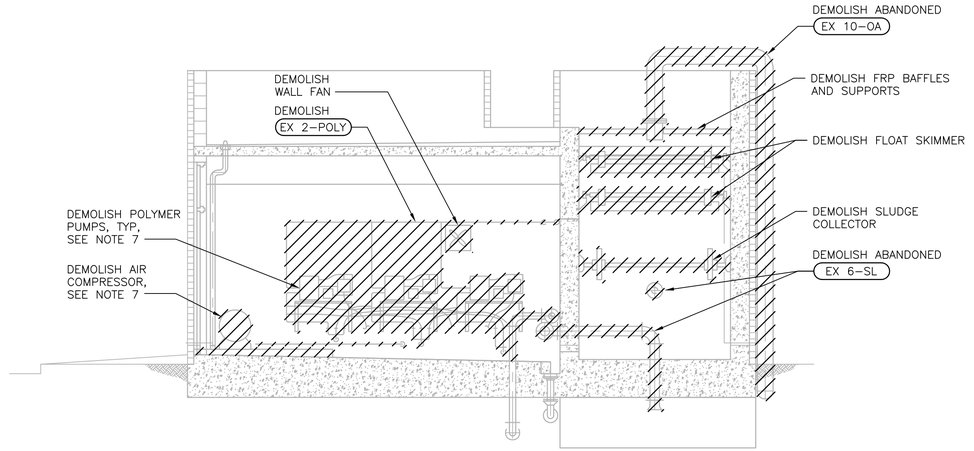


SECTION
1/4" = 1'-0"
B
66D101

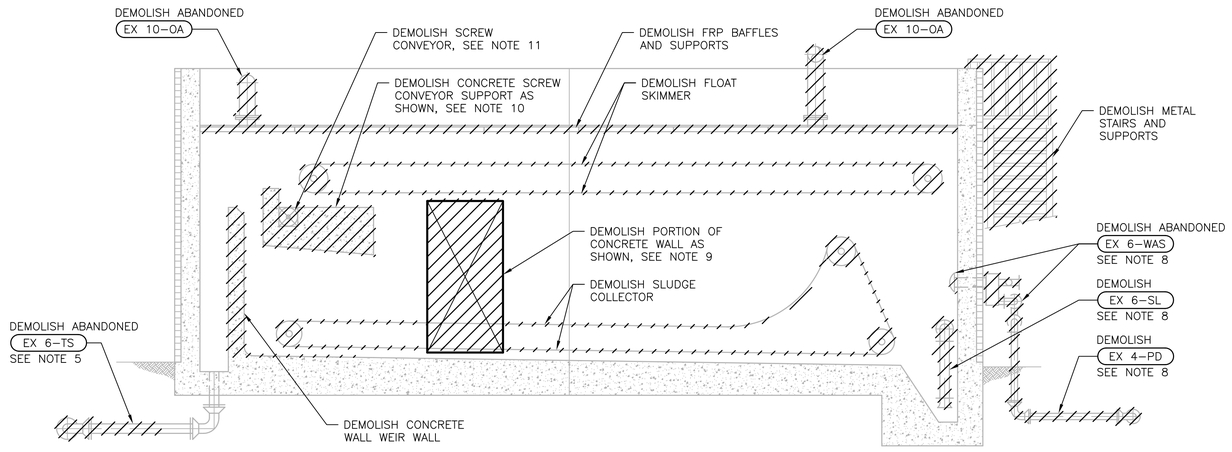


SECTION
1/4" = 1'-0"
C
66D101

NOTES:

1. CONCRETE PADS TO BE DEMOLISHED TO 4" BELOW NEW FLOOR LEVEL.
2. ALL ELECTRICAL EQUIPMENT, CONDUITS, AND CONDUCTORS ARE TO BE DEMOLISHED.
3. EXISTING PIPING TO BE DEMOLISHED THAT PENETRATES FLOORS SHALL BE CUT 1" ABOVE EXISTING FLOOR AND FILLED WITH CONCRETE. EXISTING PIPING TO BE DEMOLISHED THAT PENETRATES WALLS SHALL BE CUT FLUSH WITH WALL AND FILLED WITH CONCRETE.
4. VERTICAL PORTION OF 3" RD TO REMAIN. REMOVE OUTLET THROUGH WALL AND PLUG OPENING. MODIFY PER SHEET 66P101 TO EXIT THROUGH WEST WALL.
5. EXISTING PIPING LOCATED IN THE YARD TO BE DEMOLISHED SHALL BE CUT AT CONCRETE ENCASEMENT AND REMOVED. THE PORTION OF PIPE REMAINING UNDER THE EXISTING BUILDING SHALL BE FILLED WITH CONCRETE.
6. EXISTING CORE DRILLS THROUGH WALL FOR PIPING TO BE DEMOLISHED SHALL BE FILLED WITH CONCRETE AFTER REMOVAL OF PIPE.
7. PIPES AND EQUIPMENT TO BE DEMOLISHED SHALL INCLUDE ALL SUPPORTS, VALVES, CONDUITS, AND APPURTENANCES.
8. PIPES ON NORTHEAST SIDE OF EXISTING BUILDING SHALL BE CUT FLUSH WITH WALL AND FILLED WITH CONCRETE.
9. SAWCUT OPENING IN WALL AS SHOWN TO CREATE ROUGH OPENING FOR NEW DOORWAY. USE CEMENT GROUT TO SMOOTH SURFACES.
10. DEMOLISH EXISTING CONCRETE SUPPORT FOR SCREW CONVEYOR. USE CEMENT GROUT TO SMOOTH SURFACES.
11. AFTER REMOVING SCREW CONVEYOR, FILL OPENING IN WALL WITH CONCRETE.

FILE: 215786-66D102.dwg
DATE: Oct 07, 2015-4:54:42pm, rsnider

HDR Engineering, Inc.

| ISSUE | DATE | DESCRIPTION |
|---|---|---|
| A | JUNE 2015 | ISSUED FOR BID |

| | |
|---|---|
| PROJECT MANAGER | C. OLSON |
| DESIGNED | T. KONTONICKAS |
| DESIGNED | |
| CHECKED | C. OLSON |
| DRAWN | M. FOYLE |
| DATE | JUNE 30, 2015 |
| PROJECT NUMBER | 215786 |

REGISTERED PROFESSIONAL ENGINEER
CRAIG A. OLSON
NO. 39819
EXP. 12/31/15
CIVIL
STATE OF CALIFORNIA
06-30-15

CITY OF PINOLE CALIFORNIA 1903

PINOLE/HERCULES
WATER POLLUTION
CONTROL PLANT UPGRADE
CLIENT PN

**DEMOLITION**

**POLYMER BUILDING SECTIONS**

0 1" 2"

| | |
|---|---|
| FILENAME | 215786-66D102 |
| SCALE | AS NOTED |

SHEET
**66D102**

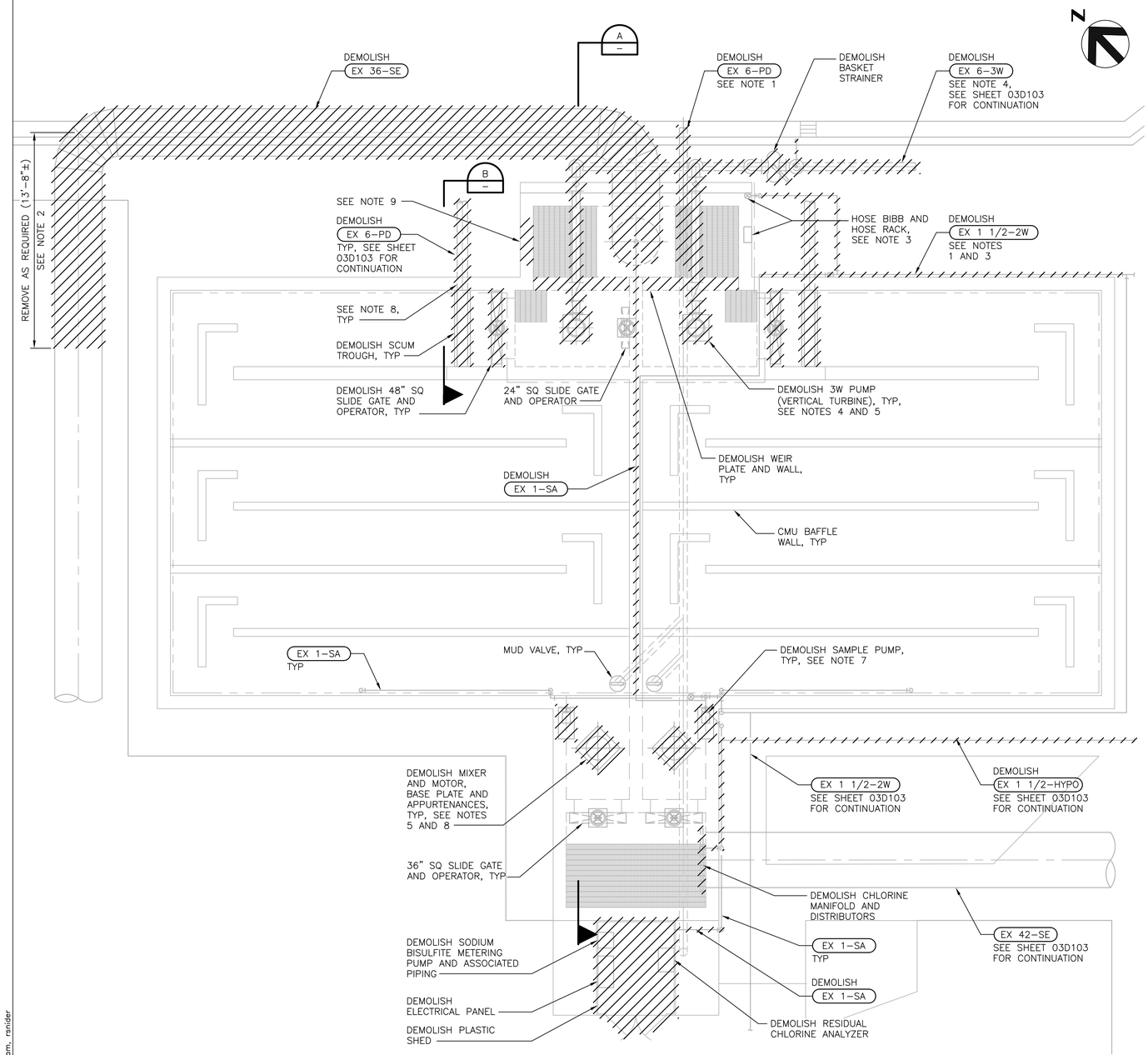


PLAN
1/4" = 1'-0"

NOTES:

1. DEMOLISH PIPELINE UP TO LIMITS INDICATED. RECONNECT PIPELINE AS SHOWN ON 03C101.
2. SEE SHEET 71P101 FOR 36-FE TEMPORARY BYPASS PIPE LOCATION.
3. RELOCATE 1.5-2W AS REQUIRED TO ACCOMMODATE NEW CONSTRUCTION. HOSE BIBB, VALVE, RACK AND HOSE TO REMAIN IN PLACE.
4. SEE SHEETS 71P102 AND 03C103 FOR NEW 3W SYSTEM AND PIPING CONNECTION.
5. FILL SLAB OPENING WITH CONCRETE, SEE STRUCTURAL STANDARD DETAILS.
6. SEE SHEET 71S102 FOR GUARDRAIL MODIFICATIONS.
7. SAWCUT EXISTING MAT FOUNDATION TO BE FLUSH WITH WALL ABOVE.
8. FILL EXISTING OPENING PER DETAIL F ON SHEET 71S103.
9. MAKE 36" DIA TEMPORARY PIPE PENETRATION BY CORE DRILLING MULTIPLE CONNECTED HJOLES OF SMALLER SIZE AROUND THE 36" DIA CIRCLE PERIMETER FROM OUSIDE OF WALL. OVERCUT EXPOSED REBARS TO 2" BELOW CUT SURFACE. APPLY EPOXY AND SEAL AT EACH RECESSED REBAR DEPRESSION. SEE DETAIL E ON SHEET 71S04 FOR NEW WALL CONSTURTION. WALL CONSTRUCTION SHALL BE COMPLETED BEFORE PIPE PENETRATION DRILLING TAKES PLACE.

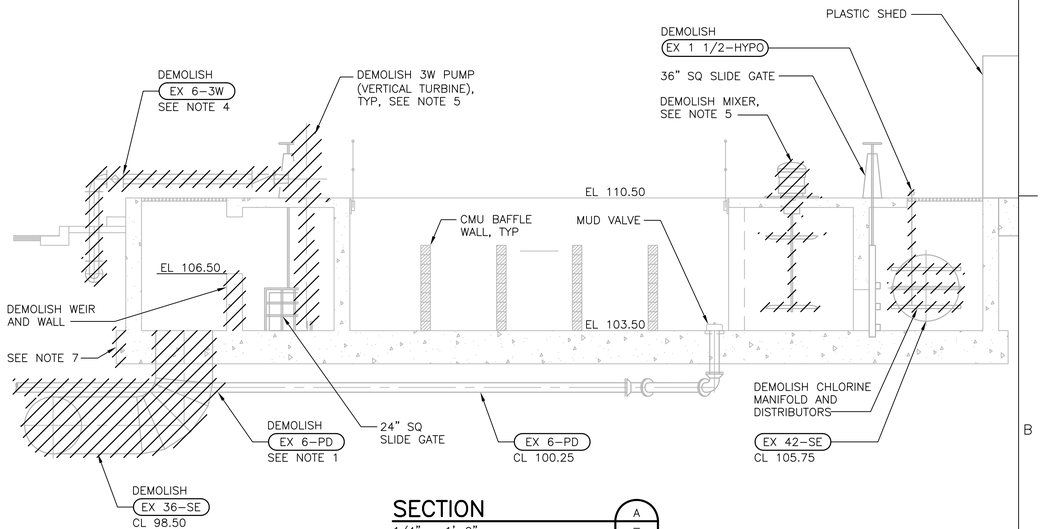


SECTION
1/4" = 1'-0"

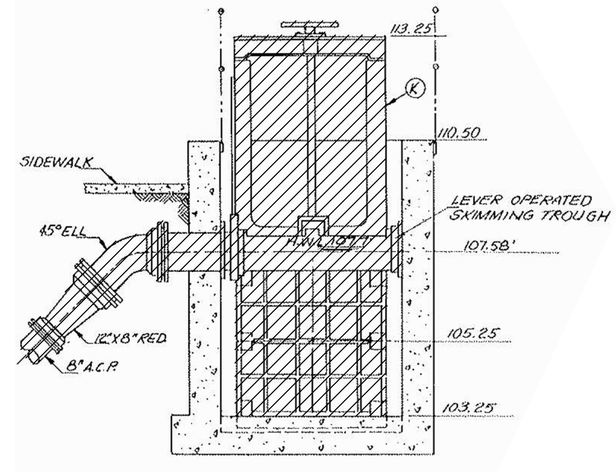


SECTION
3/8" = 1'-0"

FILE: 215786-71D101.dwg
DATE: Oct 07, 2015-4:55:09am, rsnider

HDR Engineering, Inc.

| ISSUE | DATE | DESCRIPTION |
|---|---|---|
| A | JUNE 2015 | ISSUED FOR BID |

| | |
|---|---|
| PROJECT MANAGER | C. OLSON |
| DESIGNED | M. PERINPANAYAGAM |
| DESIGNED | |
| CHECKED | C. OLSON |
| DRAWN | B. DOWN |
| DATE | JUNE 30, 2015 |
| PROJECT NUMBER | 215786 |

REGISTERED PROFESSIONAL ENGINEER
CRAIG A. OLSON
NO. 39819
EXP. 12/31/15
CIVIL
STATE OF CALIFORNIA
06-30-15

CITY OF PINOLE CALIFORNIA 1903

PINOLE/HERCULES
WATER POLLUTION
CONTROL PLANT UPGRADE
CLIENT PN

**DEMOLITION**

**CHLORINE CONTACT BASINS PLAN AND SECTIONS**

0 1" 2"

| | |
|---|---|
| FILENAME | 215786-71D101 |
| SCALE | AS NOTED |

SHEET
**71D101**

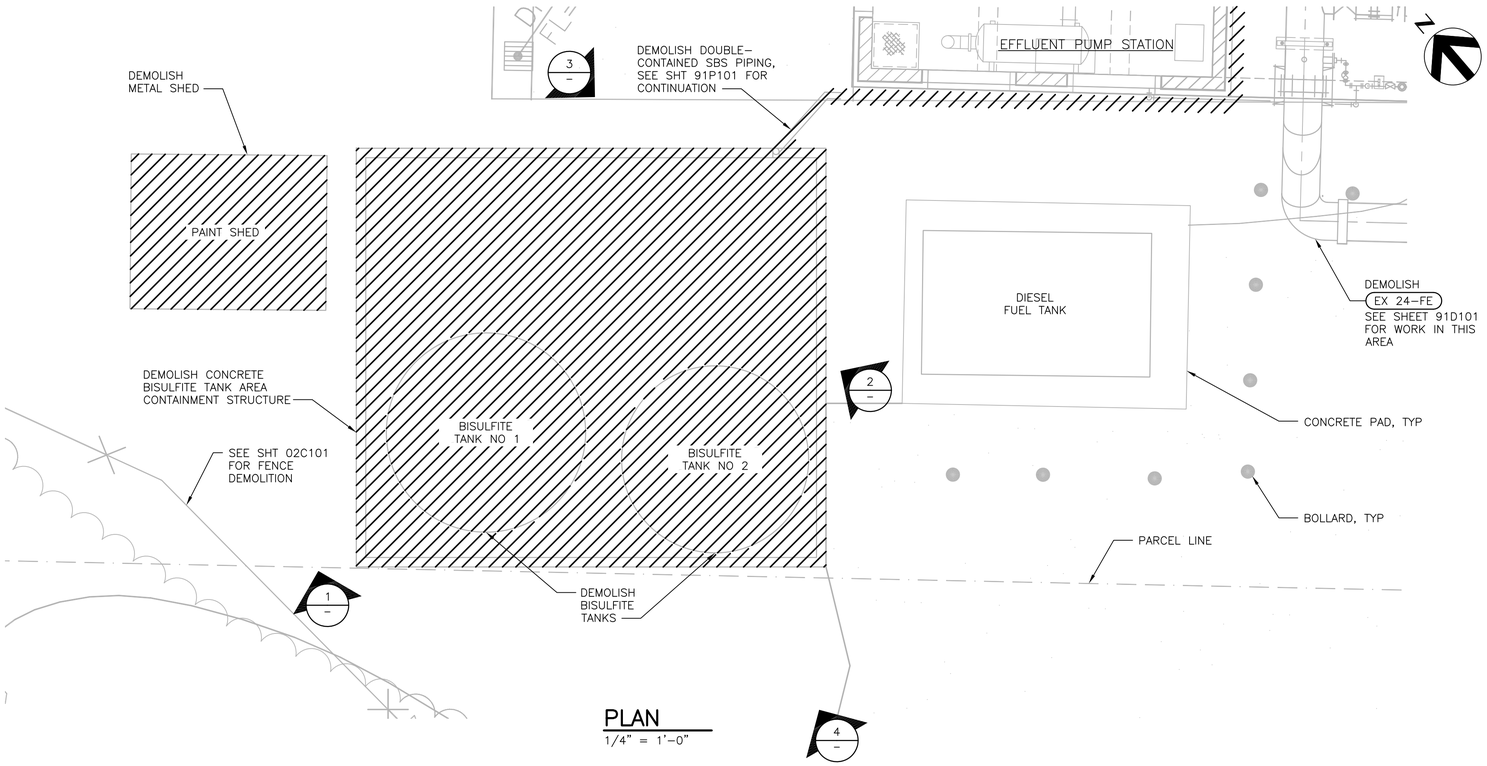


PLAN
1/4" = 1'-0"

GENERAL NOTES:

1. DEMOLISH PIPELINE UP TO LIMITS INDICATED. RECONNECT PIPELINE AS SHOWN ON 03C101.

PHOTOGRAPH 1
NTS

PHOTOGRAPH 2
NTS

PHOTOGRAPH 3
NTS

PHOTOGRAPH 4
NTS

FILE: 215786-75D101.dwg
DATE: Oct 07, 2015-4:56:10am, rsnider

HDR Engineering, Inc.

| ISSUE | DATE | DESCRIPTION |
|---|---|---|
| A | JUNE 2015 | ISSUED FOR BID |

| | |
|---|---|
| PROJECT MANAGER | C. OLSON |
| DESIGNED | T. KONTONICKAS |
| DESIGNED | |
| CHECKED | C. OLSON |
| DRAWN | B. DOWN |
| DATE | JUNE 30, 2015 |
| PROJECT NUMBER | 215786 |

REGISTERED PROFESSIONAL ENGINEER
CRAIG A. OLSON
NO. 39819
EXP. 12/31/15
CIVIL
STATE OF CALIFORNIA
06-30-15

CITY OF PINOLE CALIFORNIA 1903

PINOLE/HERCULES
WATER POLLUTION
CONTROL PLANT UPGRADE
CLIENT PN

**DEMOLITION**

**BISULFITE STORAGE AREA PLAN AND PHOTOGRAPHS**

0 1" 2"

| | |
|---|---|
| FILENAME | 215786-75D101 |
| SCALE | AS NOTED |

SHEET **75D101**

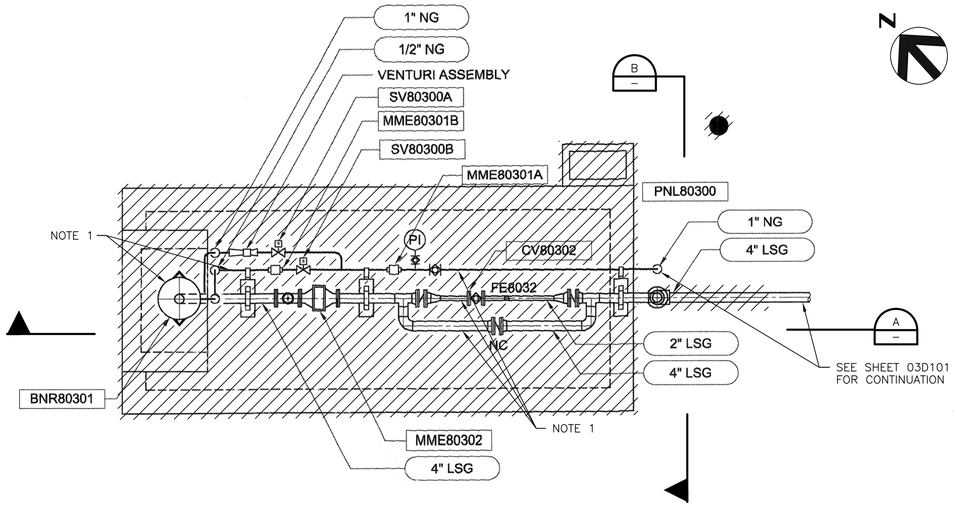


PLAN
3/8" = 1'-0"

1

NOTES:

1. ABOVE GROUND PIPING, EQUIPMENT AND ELECTRICAL PORTIONS OF DIGESTER GAS BURNER SYSTEM TO BE REMOVED AND RELOCATED, SEE SHEET 85S101, 85P101, 85E101 AND 85I101. PRIOR TO DISASSEMBLY CONTRACTOR TO AS-BUILT EXISTING SYSTEM, INCLUDING ALL PIPING, EQUIPMENT, CONTROLS, ELECTRICAL AND SUPPORTS SO SYSTEM CAN BE REASSEMBLED AND WIRED TO FUNCTION AS IT WAS PRIOR TO DISASSEMBLY.

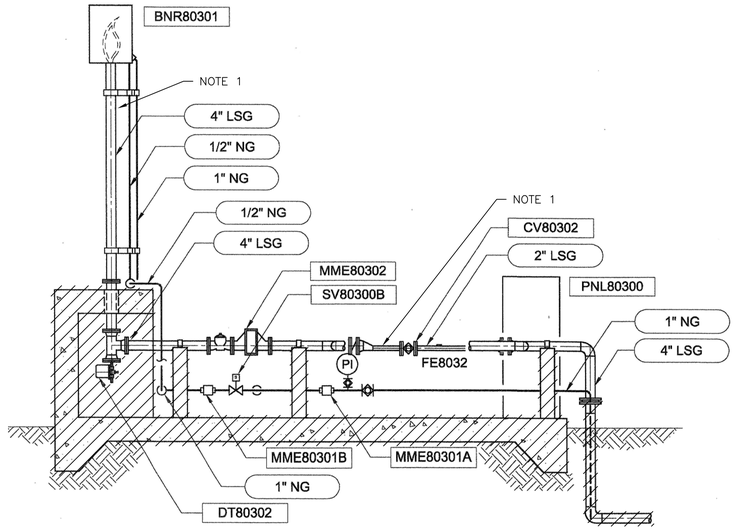


SECTION
3/8" = 1'-0"

A

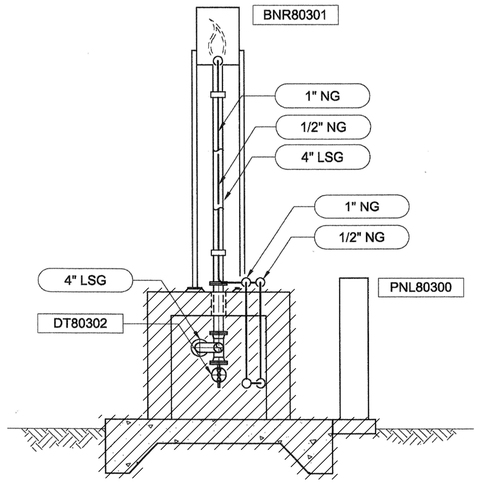


SECTION
3/8" = 1'-0"

B

PHOTOGRAPH
NTS

1

FILE: 215786-85D101.dwg
DATE: Oct 07, 2015-4:59:43pm, rsnider

HDR Engineering, Inc.

| ISSUE | DATE | DESCRIPTION |
|---|---|---|
| A | JUNE 2015 | ISSUED FOR BID |

| | |
|---|---|
| PROJECT MANAGER | C. OLSON |
| DESIGNED | T. KONTONICKAS |
| DESIGNED | |
| CHECKED | C. OLSON |
| DRAWN | B. DOWN |
| DATE | JUNE 30, 2015 |
| PROJECT NUMBER | 215786 |

REGISTERED PROFESSIONAL ENGINEER
CRAIG A. OLSON
NO. 39819
EXP. 12/31/15
CIVIL
STATE OF CALIFORNIA
06-30-15

CITY OF PINOLE CALIFORNIA 1903

PINOLE/HERCULES
WATER POLLUTION
CONTROL PLANT UPGRADE
CLIENT PN

**DEMOLITION**

**DIGESTER GAS BURNER**
**PLAN, PHOTO, AND SECTIONS**

0 1" 2"

| | |
|---|---|
| FILENAME | 215786-85D101 |
| SCALE | AS NOTED |

SHEET
**85D101**

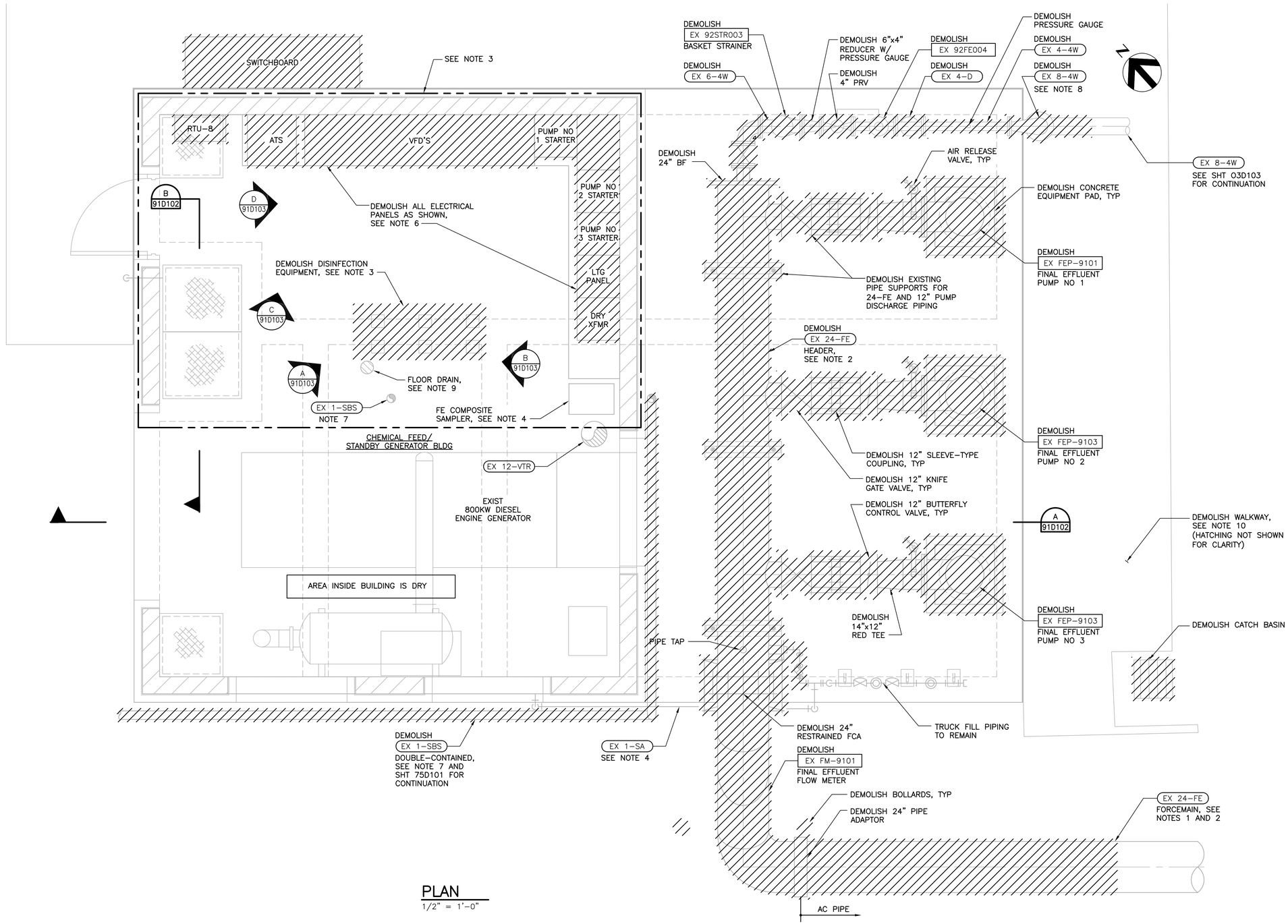


## PLAN
1/2" = 1'–0"

GENERAL NOTES:

1. DEMOLISH PIPELINE UP TO LIMITS INDICATED. RE–CONNECT PIPELINE AS SHOWN ON 03C105 AND 91P102.
2. SNAP CUT AC PIPE AND REMOVE TO POINT SHOWN. SEE APWA FOR SAFE HANDLING AND DISPOSAL PROCEDURES.
3. DEMOLISH BISULFITE PUMPS, ANALYZERS, ASSOCIATED PIPING AND EQUIPMENT, AND SUPPORT PANEL. PROTECT SAMPLE PENETRATION THROUGH SLAB FOR REUSE WITH NEW ANALYZERS.
4. RECONNECT 1–SA LINE FROM COMPOSITE SAMPLER TO NEW 24–FE HEADER, SEE SHEET 91P102.
5. NOT ALL PIPING INSIDE CHEMICAL FEED/STANDBY GENERATOR BUILDING IS SHOWN.
6. ALL UNUSED EXPOSED ELECTRICAL CONDUIT IS TO BE REMOVED ALONG WITH UNUSED CONDUCTORS. EMBEDDED ELECTRICAL CONDUITS ARE TO BE CUT OFF FLUSH WHERE THEY EMERGE FROM CONCRETE, PLUGGED WITH GROUT, AND PAINTED.
7. DEMOLISH SBS PIPING ON ROOF AND PLUG ROOF PENETRATION.
8. DEMOLISH 8" AS NECESSARY TO PERFORM WORK ON SHEET 91P102.
9. EXISTING FLOOR DRAIN TO BE PROTECTED IN PLACE.
10. DEMOLISH WALKWAY ON SOUTHEAST AND NORTHEAST SIDE OF EFFLUENT PUMP STATION STRUCTURE.

FILE: 215786–91D101.dwg
DATE: Oct 07, 2015–5:02:39pm, rsnider

HDR Engineering, Inc.

| ISSUE | DATE | DESCRIPTION |
|---|---|---|
| A | JUNE 2015 | ISSUED FOR BID |

| | |
|---|---|
| PROJECT MANAGER | C. OLSON |
| DESIGNED | M. BECK |
| DESIGNED | M. PERINPANAYAGAM |
| CHECKED | D. HUNT |
| DRAWN | M. FOYLE |
| DATE | JUNE 30, 2015 |
| PROJECT NUMBER | 215786 |

REGISTERED PROFESSIONAL ENGINEER CRAIG A. OLSON NO. 39819 EXP. 12/31/15 CIVIL STATE OF CALIFORNIA 06-30-15

CITY OF PINOLE CALIFORNIA 1903

PINOLE/HERCULES WATER POLLUTION CONTROL PLANT UPGRADE
CLIENT PN

**DEMOLITION**

**EFFLUENT PUMP STATION UPPER LEVEL PLAN**

0 1" 2"

| | |
|---|---|
| FILENAME | 215786–91D101 |
| SCALE | AS NOTED |

SHEET **91D101**

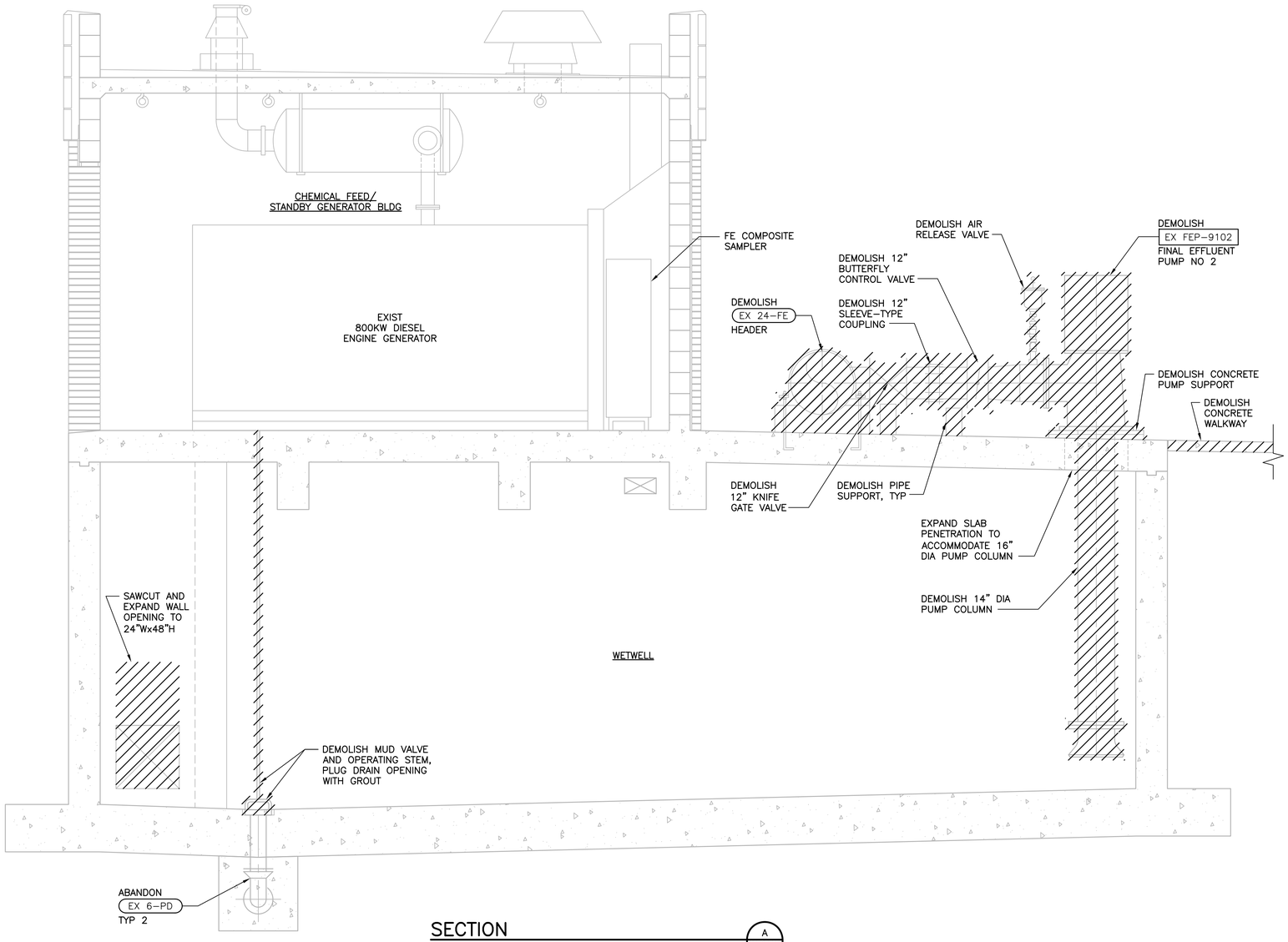


SECTION
1/2" = 1'-0"
A
91D101

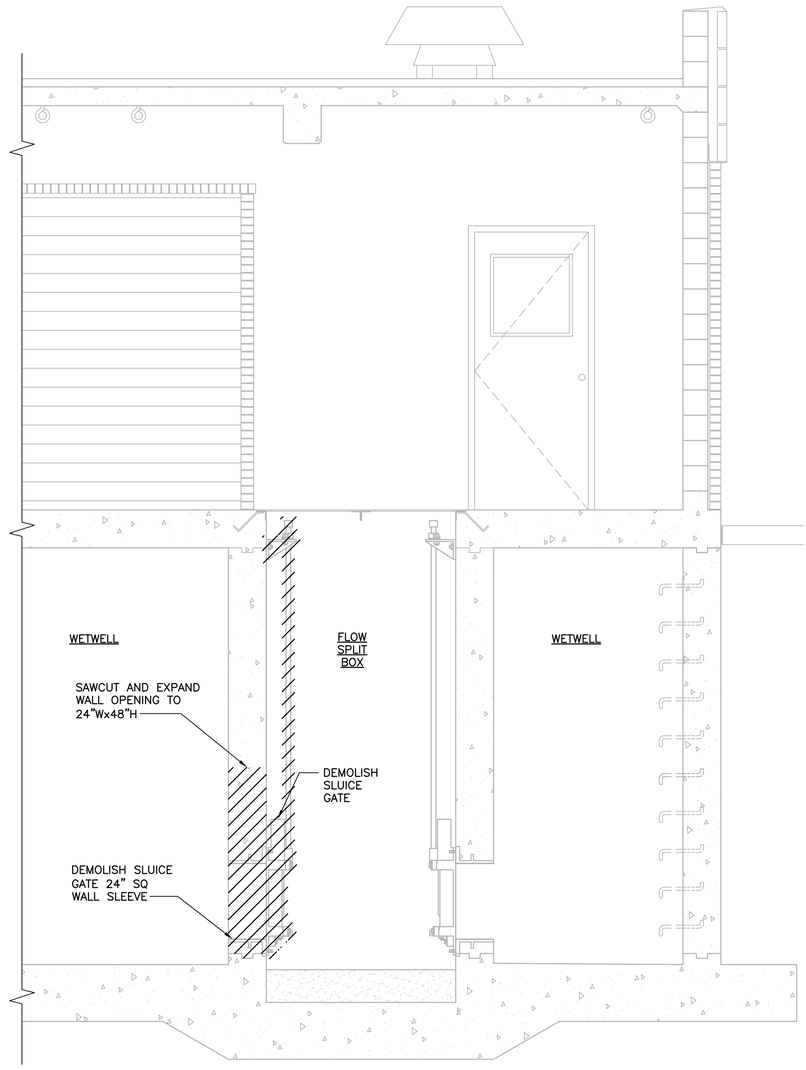


SECTION
1/2" = 1'-0"
B
91D101

FILE: 215786-91D102.dwg
DATE: Oct 07, 2015-5:02:52pm, rsnider

HDR Engineering, Inc.

| ISSUE | DATE | DESCRIPTION |
|---|---|---|
| | | |
| | | |
| | | |
| | | |
| | | |
| | | |
| A | JUNE 2015 | ISSUED FOR BID |

| | |
|---|---|
| PROJECT MANAGER | C. OLSON |
| | |
| DESIGNED | M. BECK |
| DESIGNED | M. PERINPANAYAGAM |
| CHECKED | D. HUNT |
| DRAWN | M. FOYLE |
| DATE | JUNE 30, 2015 |
| | |
| PROJECT NUMBER | 215786 |

REGISTERED PROFESSIONAL ENGINEER
CRAIG A. OLSON
NO. 39819
EXP. 12/31/15
CIVIL
STATE OF CALIFORNIA
06-30-15

CITY OF PINOLE CALIFORNIA 1903

PINOLE/HERCULES
WATER POLLUTION
CONTROL PLANT UPGRADE
CLIENT PN

**DEMOLITION**

**EFFLUENT PUMP STATION SECTIONS**

0 1" 2"

| | |
|---|---|
| FILENAME | 215786-91D102 |
| SCALE | AS NOTED |

SHEET
**91D102**

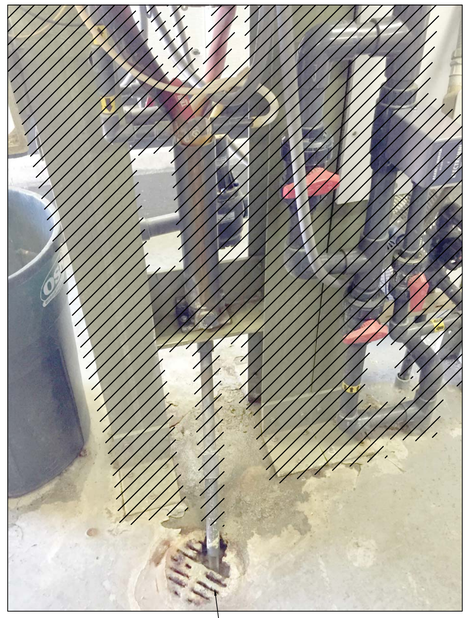

DRAIN FROM ANALYZERS, FLOOR DRAIN TO REMAIN

PHOTOGRAPH A
NO SCALE 91D101

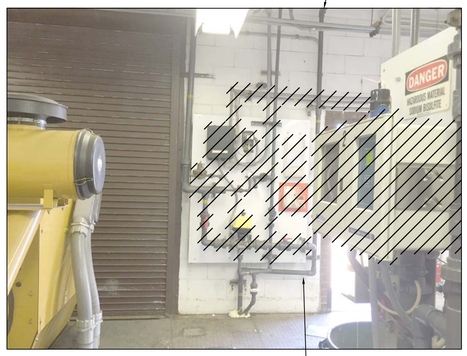


DISCONNECT FROM EXISTING SBS METERING PUMP AND CONNECT TO NEW SBS METERING PUMP DISCHARGE PIPE

SBS PIPE TO REMAIN

PHOTOGRAPH B
NO SCALE 91D101

EXISTING ELECTRICAL PANELS TO BE REMOVED

PROTECT IN PLACE EXISTING CONCRETE HOUSEKEEPING PAD

PHOTOGRAPH C
NO SCALE 91D101

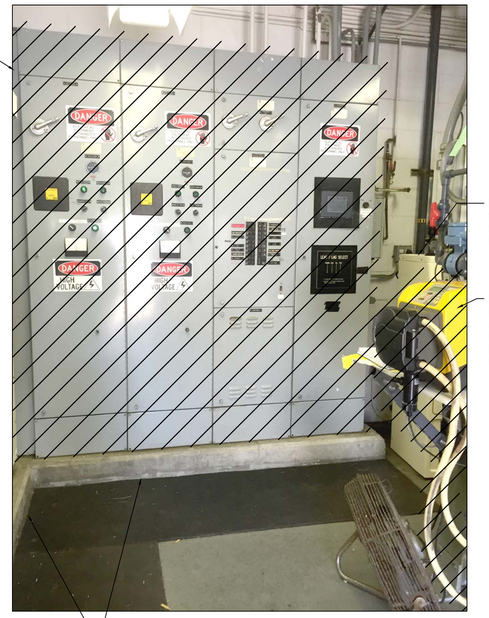


EXISTING MCC SECTIONS TO BE REMOVED

FINAL EFFLUENT COMPOSITE SAMPLER TO REMAIN IN PLACE

DEMOLISH SBS METERING PUMP & ASSOCIATED PIPING & ELECTRICAL COMPONENTS

PROTECT IN PLACE EXISTING CONCRETE HOUSEKEEPING PAD

PHOTOGRAPH D
NO SCALE 91D101

FILE: 215786-91D103.dwg
DATE: Oct. 07, 2015-5:02:58pm, rsnider

HDR Engineering, Inc.

| ISSUE | DATE | DESCRIPTION |
|---|---|---|
| A | JUNE 2015 | ISSUED FOR BID |

| | |
|---|---|
| PROJECT MANAGER | C. OLSON |
| DESIGNED | M. PERINPANAYAGAM |
| DESIGNED | M. BECK |
| CHECKED | C. OLSON |
| DRAWN | P. VAN MEURS |
| DATE | JUNE 30, 2015 |
| PROJECT NUMBER | 215786 |

REGISTERED PROFESSIONAL ENGINEER
CRAIG A. OLSON
NO. 39819
EXP. 12/31/15
CIVIL
STATE OF CALIFORNIA
06-30-15

CITY OF PINOLE CALIFORNIA 1903

PINOLE/HERCULES
WATER POLLUTION
CONTROL PLANT UPGRADE
CLIENT PN

**DEMOLITION**

**EFFLUENT PUMP STATION PHOTOS AND NOTES**

0 1" 2"

| | |
|---|---|
| FILENAME | 215786-91D103 |
| SCALE | AS NOTED |

SHEET
**91D103**

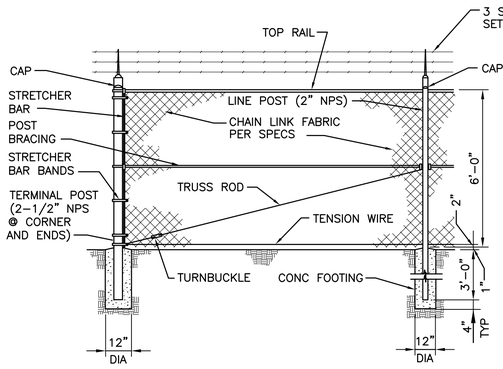


| GATE POST SCHEDULE | |
|---|---|
| LEAF SPAN | NOMINAL DIAMETER |
| ≤ 6' | 3" |
| 6'–12' | 5" |
| 12'–18' | 6" |
| 18'–24' | 8" |

NOTES:

1. SINGLE LEAF GATES TO BE REINFORCED SIMILAR TO DOUBLE SWING GATE DETAIL.
2. FINISHED GRADE PER SITE GRADING.
3. GATE FABRIC TO MATCH THAT USED IN FENCE. SEE PROJECT SPECIFICATIONS.
4. APPLY ASTM F668, CLASS 2B BLACK VINYL COATING TO ENTIRE FENCE ASSEMBLY.
5. ENTIRE FENCE ASSEMBLY TO BE BLACK VINYL COATED.

## CHAIN LINK FENCE

1 –

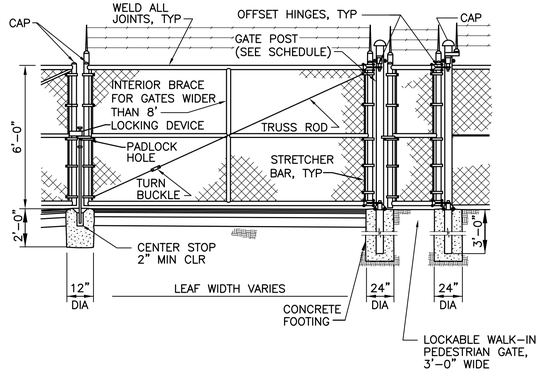


## CHAIN LINK FENCE & GATE

1 –

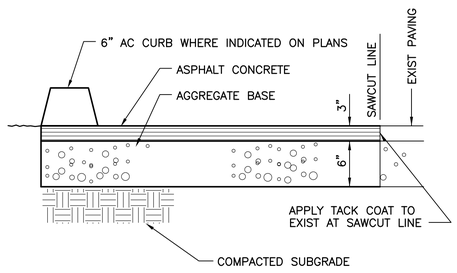


## PAVING DETAIL

2 –

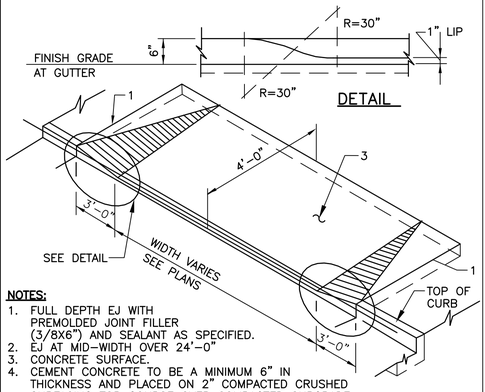


NOTES:

1. FULL DEPTH EJ WITH PREMOLDED JOINT FILLER (3/8X6") AND SEALANT AS SPECIFIED.
2. EJ AT MID–WIDTH OVER 24'–0"
3. CONCRETE SURFACE.
4. CEMENT CONCRETE TO BE A MINIMUM 6" IN THICKNESS AND PLACED ON 2" COMPACTED CRUSHED SURFACING TOP COURSE OVER COMPACTED SUBGRADE.

## LOWERED CURB

3 –

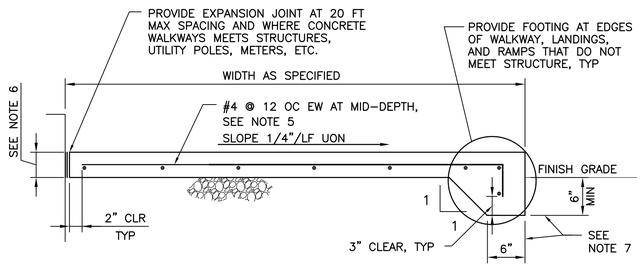


NOTES:

1. PROVIDE TROWELED FINISH UNO PER THE REQUIREMENTS OF SPEC SECTION 03002.
2. PROVIDE TOOLED JOINTS AT 5 FOOT CENTERS IN PERPENDICULAR DIRECTIONS.
3. PROVIDE 6" AGGREGATE BASE UNDER CONCRETE WALKWAYS, UNLESS OTHERWISE NOTED.
4. PROVIDE 12" AGGREGATE BASE UNDER CONCRETE RAMPS.
5. #5 AT 8" ON CENTER EACH WAY AT MID–DEPTH AT CONCRETE RAMPS.
6. 4" AT CONCRETE WALKWAYS, 6" AT CONCRETE LANDINGS, AND 8" AT CONCRETE RAMPS.
7. 12" AT CONCRETE RAMPS.

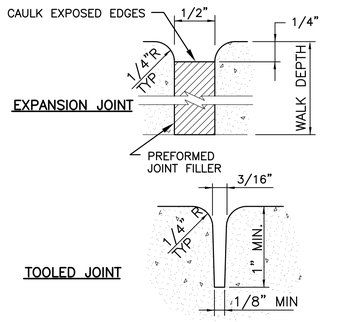


## CONCRETE WALKWAY, LANDING, AND RAMP DETAILS

4 –

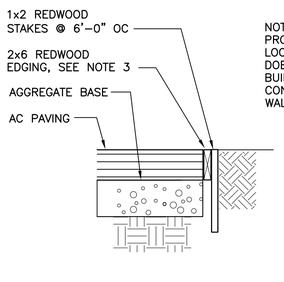


NOTE:
PROVIDE AT ALL EDGE LOCATIONS WHERE PAVING DOES NOT ABUT WALLS, BUILDINGS, STRUCTURES, CONCRETE PADS AND WALKWAYS.

## PAVEMENT EDGING DETAIL

5 –

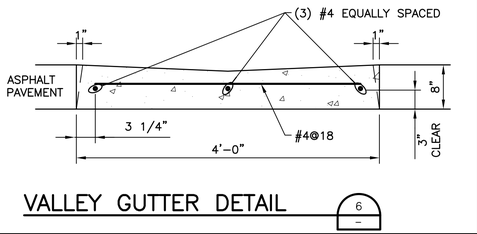


## VALLEY GUTTER DETAIL

6 –

GENERAL NOTES:

1. THE TYPES, LOCATIONS, SIZES, AND DEPTHS OF EXISTING UNDERGROUND FACILITIES AS SHOWN ON THESE IMPROVEMENT PLANS WERE OBTAINED FROM SOURCES OF VARYING RELIABILITY. A REASONABLE EFFORT HAS BEEN MADE TO LOCATE AND DELINEATE ALL KNOWN UNDERGROUND FACILITIES. HOWEVER, THE OWNER AND ENGINEER CAN ASSUME NO RESPONSIBILITY FOR THE COMPLETENESS OR ACCURACY OF THE DELINEATION OF SUCH UNDERGROUND FACILITIES, NOR FOR THE EXISTENCE OF OTHER BURIED OBJECTS OR FACILITIES WHICH MAY BE ENCOUNTERED BUT WHICH ARE NOT SHOWN ON THESE PLANS. THE CONTRACTOR SHALL BE RESPONSIBLE FOR DETERMINING THE EXACT LOCATION OF THOSE FACILITIES SHOWN AND ANY WHICH MAY EXIST AND ARE NOT SHOWN PRIOR TO COMMENCEMENT OF ANY WORK. THE CONTRACTOR SHALL EXPOSE ALL UNDERGROUND FACILITIES THAT ARE TO BE CONNECTED TO OR THAT ARE IN THE PATH OF THE PROPOSED IMPROVEMENTS FOR VERIFICATION OF LOCATION AND ELEVATION. THE CONTRACTOR SHALL DETERMINE LOCATION OF CONFLICTS, IF ANY, PRIOR TO COMMENCING CONSTRUCTION OF THAT PORTION OF THE WORK THAT WOULD BE AFFECTED BY A CONFLICT WITH THE EXISTING FACILITIES. MINOR CHANGES, (< 5 FEET HORIZONTAL < 1 FEET VERTICAL), IN THE ACTUAL LOCATION, DEPTH AND CONFIGURATION OF EXISTING PIPING SYSTEMS DO NOT CONSTITUTE A CHANGED SITE CONDITION, AND THEREFORE NO EXTRA PAYMENT WILL BE ALLOWED.
2. LOCATIONS SHOWN FOR ALL NEW YARD PIPING ARE APPROXIMATE AND DEPEND ON LOCATION AND DEPTH OF EXISTING PIPING AND OTHER IMPROVEMENTS. THE CONTRACTOR IS REQUIRED TO FOLLOW THE ALIGNMENT SHOWN AS CLOSELY AS POSSIBLE AFTER DETERMINING EXACT LOCATION OF EXISTING FACILITIES.
3. COORDINATE ALL YARD PIPING WITH SITE ELECTRICAL WORK, (SEE SHEETS 00E103 AND 00E104). DO NOT START YARD PIPING UNTIL YARD ELECTRICAL CONDUITS ARE LOCATED.
4. SMALL DIAMETER (<4") WATER, IRRIGATION AND OTHER MISCELLANEOUS PIPING EXIST THROUGHOUT THE WPCP SITE AREA. THE CONTRACTOR IS REQUIRED TO REPAIR PIPING DAMAGED BY CONSTRUCTION AND/OR REALIGN PIPING AS REQUIRED TO CONSTRUCT THE IMPROVEMENTS UNDER THIS CONTRACT. NO ADDITIONAL COMPENSATION WILL BE GRANTED TO THE CONTRACTOR FOR THE REPAIR OF THIS SMALL DIAMETER PIPING.
5. ALL PAVING, LANDSCAPING, PIPING, AND OTHER EXISTING FACILITIES NOT DESIGNATED FOR REMOVAL/DEMOLITION DURING CONSTRUCTION OF NEW FACILITIES TO BE PROTECTED IN PLACE OR REPLACED IN KIND AT COMPLETION OF CONSTRUCTION.
6. ALL PAVING TO BE REMOVED SHALL BE SAWCUT PRIOR TO REMOVAL. MATCH EXISTING PAVEMENT ELEVATIONS AT SAWCUT LINES. SLOPE PAVEMENT TO DRAIN IN DIRECTION SHOWN (↓). MINIMUM SLOPE = 0.5%.
7. MAINTAIN 3'–6" MINIMUM COVER ON ALL PIPING UNLESS SPECIFICALLY SHOWN OTHERWISE.

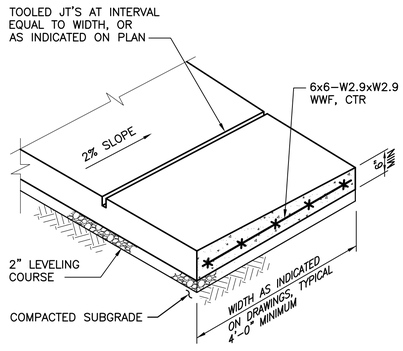


NOTES:

1. PROVIDE FULL DEPTH 3/8" PREMOLDED EXPANSION JOINT FILLER ALL AROUND AT ALL UTILITY POLES, METER BOXES, ETC.
2. PLACE FULL DEPTH THRU JOINTS W/1/2"x6" PREMOLDED EJ FILLER AT POINT OF TANGENCY AND AT MIN 25' INTERVALS.

## CONCRETE WALKWAY

NTS 7 –

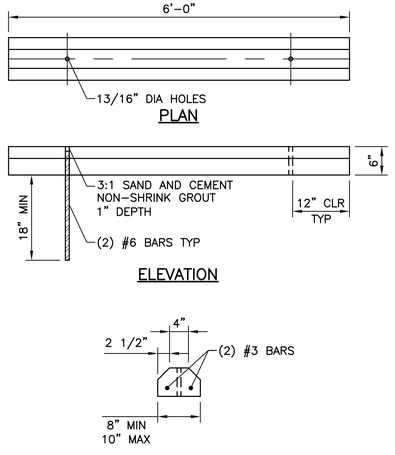


## PRECAST CONCRETE WHEELSTOP

NTS 8 –

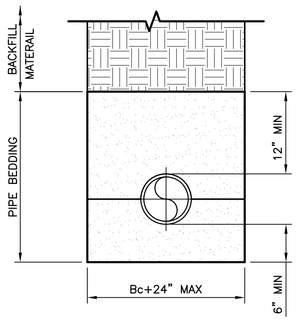


NOTE:

1. Bc=OUTSIDE DIAMETER OF PIPE.
2. SEE SECTION 02221.

## EMBEDMENT FOR STEEL/DI PIPE

NTS 9 –

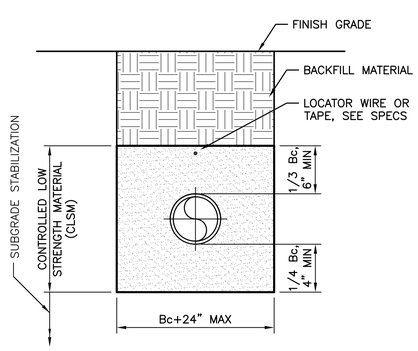


NOTES:

1. Bc=OUTSIDE DIAMETER OF PIPE.
2. ALL CLSM BACKFILL OMITTED FOR UG PIPING UNLESS SHOWN ON PLANS.

## EMBEDMENT FOR FRP/PVC PIPE

NTS 10 –

FILE: 215786–00C001.dwg
DATE: Oct 07, 2015–5:12:33am, rsnider

HDR Engineering, Inc.

| ISSUE | DATE | DESCRIPTION |
|---|---|---|
| | | |
| | | |
| | | |
| | | |
| | | |
| | | |
| A | JUNE 2015 | ISSUED FOR BID |

| | |
|---|---|
| PROJECT MANAGER | C. OLSON |
| | |
| DESIGNED | M. PERINPANAYAGAM |
| DESIGNED | |
| CHECKED | C. OLSON |
| DRAWN | P. VAN MEURS |
| DATE | JUNE 30, 2015 |
| | |
| PROJECT NUMBER | 215786 |

REGISTERED PROFESSIONAL ENGINEER
CRAIG A. OLSON
NO. 39819
EXP. 12/31/15
CIVIL
STATE OF CALIFORNIA
06-30-15

CITY OF PINOLE CALIFORNIA 1903

PINOLE/HERCULES
WATER POLLUTION
CONTROL PLANT UPGRADE
CLIENT PN

**CIVIL**

**CIVIL DETAILS 1**

0 1" 2"

| | |
|---|---|
| FILENAME | 215786–00C001 |
| SCALE | NTS |

SHEET
**00C001**

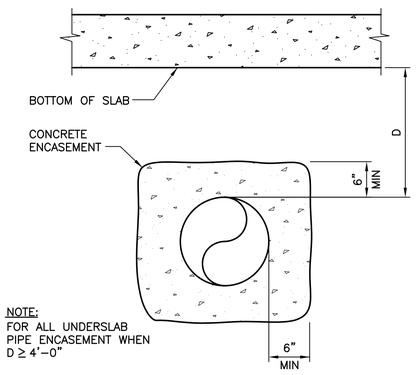


NOTE:
FOR ALL UNDERSLAB PIPE ENCASEMENT WHEN D ≥ 4'–0"

## UNDERSLAB PIPE ENCASEMENT 1

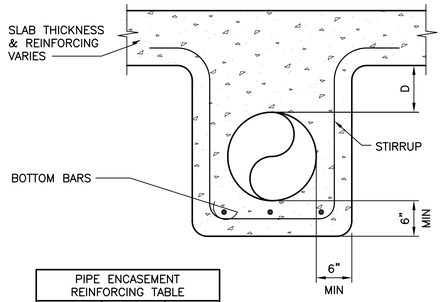


| PIPE ENCASEMENT REINFORCING TABLE | | |
|---|---|---|
| PIPE SIZE | STIRRUPS | BOTTOM BARS |
| 4"–14" | #3@12 | 3#4 |
| 16"–20" | #3@12 | 4#4 |
| 24"–30" | #4@12 | 4#4 |
| 36"–48" | #4@8 | 5#4 |

NOTE:
FOR ALL UNDERSLAB PIPE ENCASEMENT WHEN D < 4'–0"

## UNDERSLAB PIPE ENCASEMENT 2

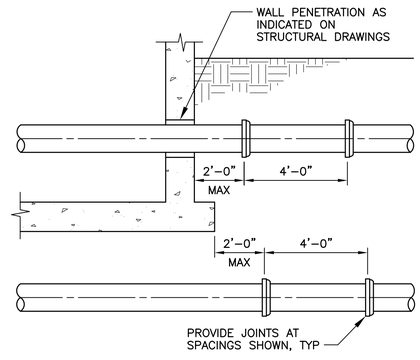


## LOCATION OF FLEXIBLE CONNECTIONS DETAIL 3

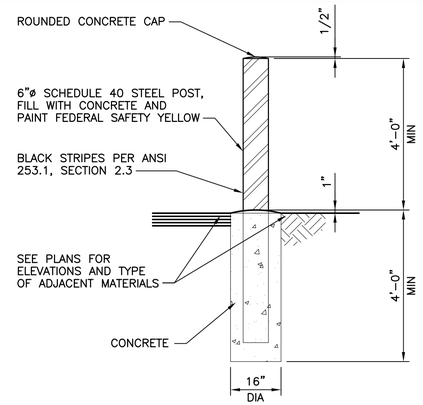


## BOLLARD DETAIL 4

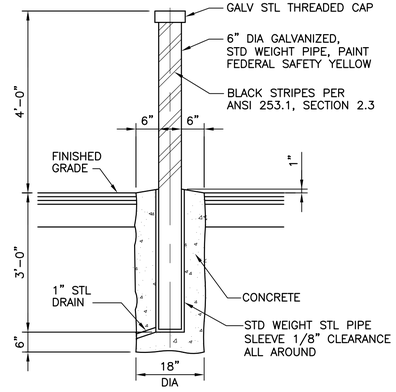


## REMOVABLE BOLLARD DETAIL 5

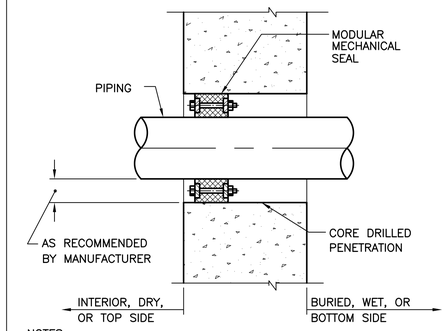


NOTES:
1. BOLT HEADS ON ACCESSIBLE SIDE OF PENETRATION
2. ONE SEAL FOR WALLS LESS THAN 8" THICK, TWO FOR WALLS 8" THICK AND LARGER
3. PROVIDE DOUBLE ROW OF SEALS FOR PIPES 16" DIAMETER AND LARGER IF CONCRETE THICKNESS PERMITS

## PENETRATION 6

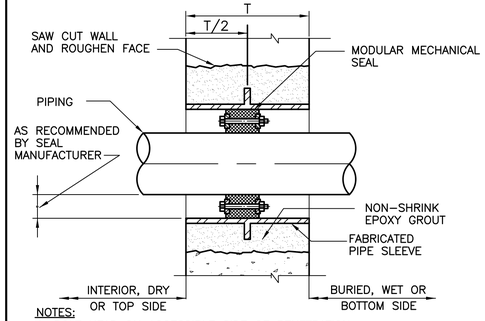


NOTES:
1. BOLT HEAD ON ACCESSIBLE SIDE OF PENETRATION
2. WHEN USED AS FLOOR PENETRATION IN WET AREA, PROVIDE SLEEVE WITH TOP 3" ABOVE FINISHED FLOOR
3. PROVIDE DOUBLE ROW OF SEALS FOR PIPES 16" DIAMETER AND LARGER IF CONCRETE THICKNESS PERMITS
3. PROVIDE ONE SEAL FOR WALLS LESS THAN 8" THICK, TWO FOR WALLS 8" THICK AND LARGER

## PENETRATION 7

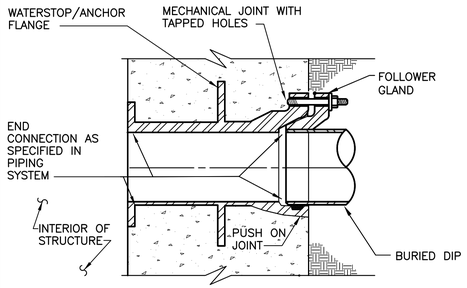


NOTE:
TYPICAL CONNECTION OF BURIED DIP TO CONCRETE STRUCTURE UNLESS OTHERWISE INDICATED

## WALL PENETRATION FOR DUCTILE IRON PIPING SYSTEMS 8

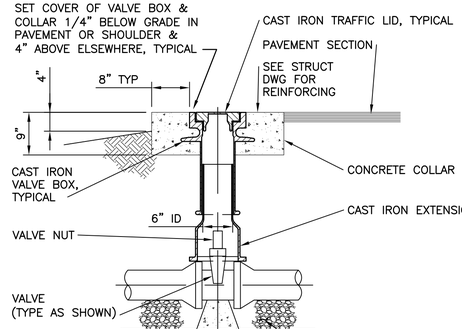


## BURIED VALVE BOX 9

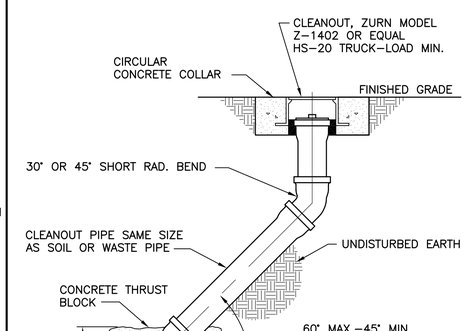


## CLEAN OUT AT GRADE DETAIL 10

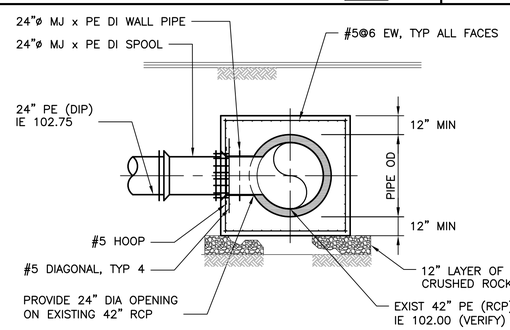


SECTION "A–A"

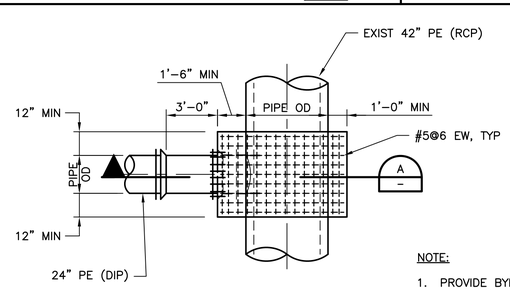


PARTIAL PLAN

NOTE:
1. PROVIDE BYPASS PUMPING TO MAKE CONNECTION.
2. CONTRACTOR MAY PROPOSE ALTERNATE CONNECTION DETAIL BASED ON CONSTRUCTION SEQUENCING.

## CAST–IN–PLACE RCP CONNECTION DETAIL 11

FILE: 215786–00C002.dwg
DATE: Oct 07, 2015–5:12:41am, rsnider

HDR Engineering, Inc.

| ISSUE | DATE | DESCRIPTION |
|---|---|---|
| A | JUNE 2015 | ISSUED FOR BID |

| | |
|---|---|
| PROJECT MANAGER | C. OLSON |
| DESIGNED | M. PERINPANAYAGAM |
| DESIGNED | |
| CHECKED | C. OLSON |
| DRAWN | P. VAN MEURS |
| DATE | JUNE 30, 2015 |
| PROJECT NUMBER | 215786 |

REGISTERED PROFESSIONAL ENGINEER CRAIG A. OLSON NO. 39819 EXP. 12/31/15 CIVIL STATE OF CALIFORNIA 06-30-15

CITY OF PINOLE CALIFORNIA 1903

PINOLE/HERCULES WATER POLLUTION CONTROL PLANT UPGRADE
CLIENT PN

**CIVIL**

**CIVIL DETAILS 2**

0 1" 2"

| FILENAME | 215786–00C002 |
|---|---|
| SCALE | NTS |

SHEET 00C002

## STORM DRAIN STRUCTURE TABLE

| NAME | RIM ELEV | SUMP ELEV | COORDS | DIAMETER | PIPES |
|---|---|---|---|---|---|
| STD DI1 | 107.67 | 103.06 | N 2196108.20<br>E 6044316.91 | 2.00'ø | 12" OUT TO STD MH2, IE 103.23, S=0.50% |
| STD DI2 | 107.59 | 102.80 | N 2196414.33<br>E 6044196.33 | 2.00'ø | 12" OUT TO MH-PD11, IE 102.97, S=0.50% |
| STD DI3 | 108.50 | 103.08 | N 2196372.59<br>E 6044083.83 | 2.00'ø | 12" OUT TO MH-PD10, IE 103.25, S=0.50% |
| STD DI4 | 107.25 | 102.22 | N 2196387.44<br>E 6043952.52 | 2.00'ø | 12" OUT TO MH-PD12, IE 102.39, S=0.49% |
| STD DI5 | 108.01 | 102.42 | N 2196221.86<br>E 6044008.90 | 2.00'ø | 12" OUT TO MH-PD14, IE 102.59, S=0.50% |
| STD DI6 | 107.89 | 102.40 | N 2196214.50<br>E 6044018.78 | 2.00'ø | 12" OUT TO MH-PD14, IE 102.57, S=0.50% |
| STD DI7 | 109.17 | 104.75 | N 2196146.78<br>E 6043942.56 | 2.00'ø | 12" OUT TO MH-PD13, IE 104.92, S=0.50% |
| STD DI8 | 108.12 | 102.70 | N 2196147.42<br>E 6044021.94 | 2.00'ø | 12" OUT TO MH-PD3, IE 102.87, S=0.50% |
| STD DI9 | 107.88 | 102.46 | N 2196128.45<br>E 6044004.81 | 2.00'ø | 12" OUT TO MH-PD2, IE 102.63, S=0.50% |
| STD DI10 | 108.37 | 102.96 | N 2196103.11<br>E 6044207.41 | 2.00'ø | 12" OUT TO MH-PD6, IE 103.12, S=0.37% |
| STD DI11 | 108.19 | 102.77 | N 2196193.75<br>E 6044106.47 | 2.00'ø | 12" OUT TO MH-PD4, IE 102.94, S=0.50% |
| STD DI12 | 108.12 | 102.72 | N 2196138.86<br>E 6044056.98 | 2.00'ø | 12" OUT TO MH-PD3, IE 102.89, S=0.50% |
| STD DI13 | 109.15 | 103.57 | N 2196084.49<br>E 6043988.48 | 2.00'ø | 12" OUT TO MH-PD2, IE 103.74, S=0.50% |
| STD DI14 | 108.90 | 100.60 | N 2196027.91<br>E 6043967.43 | 2.00'ø | 12" OUT TO HEADWORKS, IE 102.60, S=1.60% |

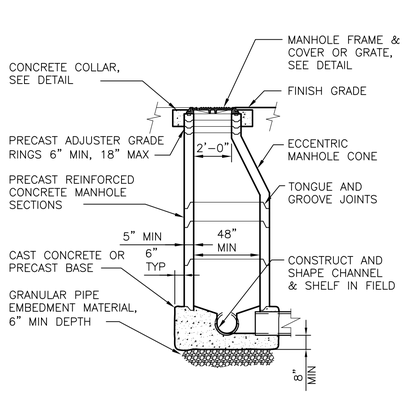


SECTION A
NTS

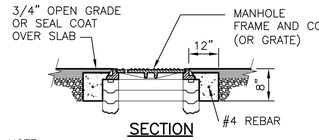


SECTION

NOTE:

1. COLLAR NOT REQUIRED IN LANDSCAPED OR UNPAVED AREAS

CONCRETE COLLAR DETAIL
NTS

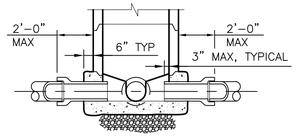


SECTION B
NTS

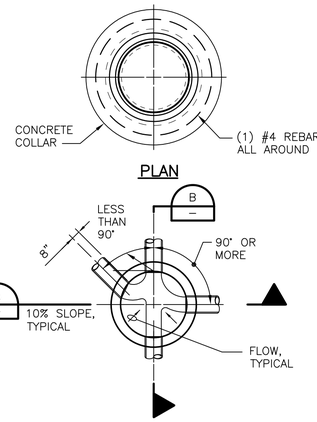


PLAN VIEW OF MANHOLE SHOWING INTERSECTING DRAINS
NTS

# PRECAST ECCENTRIC MANHOLE
NTS

NOTES:

1. IN UNIMPROVED NON-TRAFFIC AREAS, TOP OF MANHOLE SHALL BE 6" TO 9" ABOVE GRADE UNO.
2. PIPES SHALL NOT PROTRUDE MORE THAN 3" INSIDE OF MANHOLE SECTION. CONSTRUCT WATER TIGHT CONNECTION TO MANHOLE.
3. MANHOLE SECTION LENGTHS ARRANGED TO FIT DEPTH.
4. SET AND SEAL MANHOLE SECTION JOINTS AS FOLLOWS:
   A. ABOVE HIGH GROUNDWATER ELEVATION: MASTIC JOINT COMPOUND
   B. BELOW HIGH GROUNDWATER ELEVATION: PREMOLDED JOINT COMPOUND OR O-RING

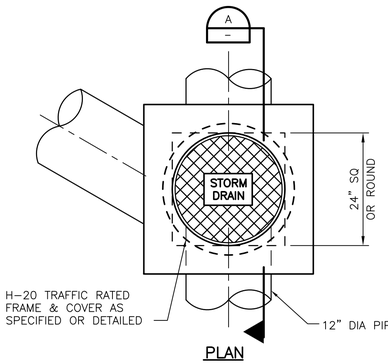


PLAN

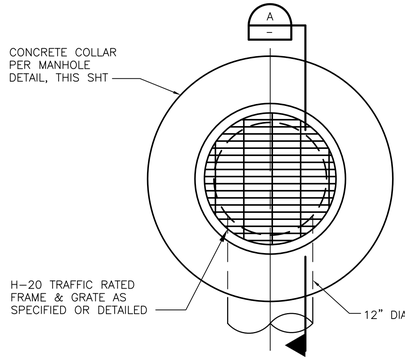


PLAN

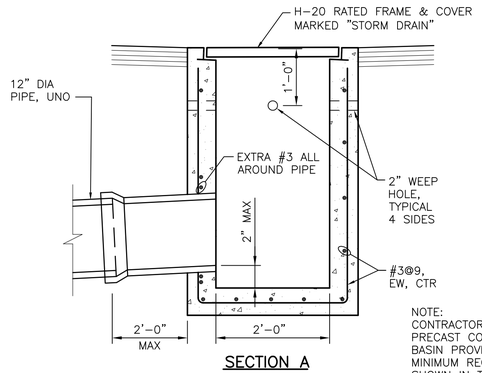


SECTION A

NOTE:
CONTRACTOR MAY SUBMIT PRECAST CONCRETE CATCH BASIN PROVIDING IT MEETS MINIMUM REQUIREMENTS SHOWN IN THIS DETAIL.

# STD MANHOLE DETAIL

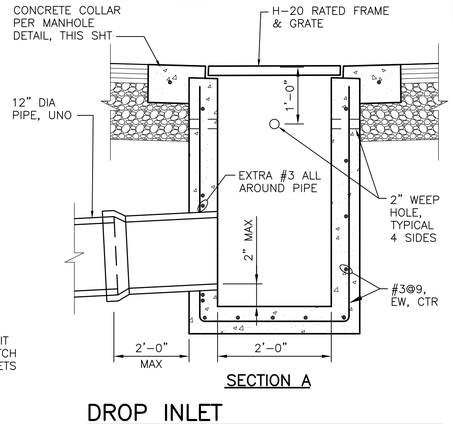


SECTION A

# DROP INLET

## PLANT INFLUENT STRUCTURE TABLE

| NAME | SUMP ELEV | COORDS | DIAMETER | PIPES |
|---|---|---|---|---|
| MH 1 | 97.05 | N 2196015.72<br>E 6043990.84 | 5.00'ø | 36" IN FROM MH 2, IE 97.10, S=0.20%<br>36" OUT TO Headworks, IE 97.05, S=0.20% |
| MH 2 | 97.29 | N 2196020.73<br>E 6044086.46 | 5.00'ø | 36" IN FROM MH 3, IE 97.34, S=0.20%<br>36" OUT TO MH 1, IE 97.29, S=0.20% |
| MH 3 | 97.45 | N 2196061.85<br>E 6044123.48 | 5.00'ø | 30" IN FROM Structure - (111), IE 99.47, S=0.20%<br>30" IN FROM Structure - (116), IE 97.50, S=0.20%<br>36" OUT TO MH 2, IE 97.45, S=0.20% |
| MH H1 | 100.06 | N 2196104.04<br>E 6044161.45 | 5.00'ø | 30" IN FROM MH H2, IE 100.06, S=0.20%<br>30" OUT TO Structure - (111), IE 100.06, S=4.58% |
| MH H2 | 100.12 | N 2196127.31<br>E 6044182.39 | 5.00'ø | 24" IN FROM Structure - (30), IE 100.17, S=0.20%<br>30" OUT TO MH H1, IE 100.12, S=0.20% |
| MH P1 | 97.54 | N 2196041.93<br>E 6044145.28 | 5.00'ø | 30" IN FROM Structure - (113), IE 98.04, S=0.20%<br>30" OUT TO Structure - (116), IE 98.04, S=4.58% |

## PLANT DRAIN STRUCTURE TABLE

| NAME | SUMP ELEV | COORDS | DIAMETER | PIPES |
|---|---|---|---|---|
| MH PD1 | 98.28 | N 2196057.06<br>E 6044023.69 | 5.00'ø | 24" IN FROM Structure - (202), IE 98.28, S=0.37%<br>24" OUT TO , IE 98.28, S=0.37% |
| MH PD2 | 98.51 | N 2196100.72<br>E 6044002.74 | 5.00'ø | 24" IN FROM MH PD3, IE 98.51, S=0.45%<br>12" IN FROM MH PD13, IE 99.51, S=0.50%<br>24" OUT TO MH PDFM, IE 98.51, S=0.37% |
| MH PD3 | 98.73 | N 2196136.22<br>E 6044034.47 | 4.00'ø | 24" IN FROM MH PD4, IE 98.73, S=0.45%<br>24" OUT TO MH PD2, IE 98.73, S=0.45% |
| MH PD4 | 99.09 | N 2196196.12<br>E 6044088.01 | 5.00'ø | 18" IN FROM MH PD8, IE 99.09, S=0.36%<br>18" IN FROM MH PD5, IE 99.09, S=0.45%<br>24" OUT TO MH PD3, IE 99.09, S=0.45% |
| MH PD5 | 99.47 | N 2196152.42<br>E 6044160.33 | 4.00'ø | 18" IN FROM MH PD6, IE 99.47, S=0.45%<br>18" OUT TO MH PD4, IE 99.47, S=0.45% |
| MH PD6 | 99.80 | N 2196112.74<br>E 6044226.00 | 4.00'ø | 18" IN FROM MH PD7, IE 99.85, S=0.45%<br>18" OUT TO MH PD5, IE 99.82, S=0.45% |
| MH PD7 | 100.36 | N 2196197.43<br>E 6044301.05 | 4.00'ø | 18" OUT TO MH PD6, IE 100.36, S=0.45% |
| MH PD8 | 99.41 | N 2196279.52<br>E 6044054.62 | 4.00'ø | 12" IN FROM MH PD12, IE 99.41, S=0.50%<br>12" IN FROM MH PD9, IE 99.41, S=0.36%<br>18" OUT TO MH PD4, IE 99.41, S=0.36% |
| MH PD9 | 99.63 | N 2196324.41<br>E 6044094.87 | 4.00'ø | 12" IN FROM MH PD10, IE 99.63, S=0.64%<br>12" OUT TO MH PD8, IE 99.63, S=0.36% |
| MH PD10 | 100.00 | N 2196367.50<br>E 6044133.52 | 4.00'ø | 12" IN FROM MH PD11, IE 100.00, S=0.50%<br>12" OUT TO MH PD9, IE 100.00, S=0.64% |
| MH PD11 | 100.34 | N 2196418.81<br>E 6044179.52 | 4.00'ø | 12" OUT TO MH PD10, IE 100.34, S=0.50% |
| MH PD12 | 99.77 | N 2196335.16<br>E 6044010.41 | 4.00'ø | 12" OUT TO MH PD8, IE 99.77, S=0.50% |
| MH PD13 | 99.85 | N 2196145.68<br>E 6043952.67 | 4.00'ø | 12" IN FROM MH PD14, IE 101.35, S=0.57%<br>12" OUT TO MH PD2, IE 99.85, S=0.50% |
| MH PD14 | 101.86 | N 2196212.54<br>E 6044012.45 | 4.00'ø | 12" OUT TO MH PD13, IE 101.86, S=0.57% |
| MH PDFM | 98.44 | N 2196082.69<br>E 6044011.39 | 5.00'ø | 24" IN FROM MH PD2, IE 98.44, S=0.37%<br>24" OUT TO Structure - (202), IE 98.44, S=0.87% |
| Structure - (202) | ??? | N 2196072.86<br>E 6044016.11 | ???'ø | 24" IN FROM MH PDFM, IE 98.34, S=0.87%<br>24" OUT TO MH PD1, IE 98.34, S=0.37% |

FILE: 215786-00C003.dwg
DATE: Oct 07, 2015-5:12:57am, rsnider

HDR Engineering, Inc.

| ISSUE | DATE | DESCRIPTION |
|---|---|---|
| A | JUNE 2015 | ISSUED FOR BID |

| | |
|---|---|
| PROJECT MANAGER | C. OLSON |
| DESIGNED | M. PERINPANAYAGAM |
| DESIGNED | |
| CHECKED | C. OLSON |
| DRAWN | P. VAN MEURS |
| DATE | JUNE 30, 2015 |
| PROJECT NUMBER | 215786 |

REGISTERED PROFESSIONAL ENGINEER
CRAIG A. OLSON
NO. 39819
EXP. 12/31/15
CIVIL
STATE OF CALIFORNIA
06-30-15

CITY OF PINOLE CALIFORNIA 1903

PINOLE/HERCULES
WATER POLLUTION
CONTROL PLANT UPGRADE
CLIENT PN

**CIVIL**

**CIVIL DETAILS 3**

0 1" 2"

| | |
|---|---|
| FILENAME | 215786-00C003 |
| SCALE | NTS |

SHEET
**00C003**

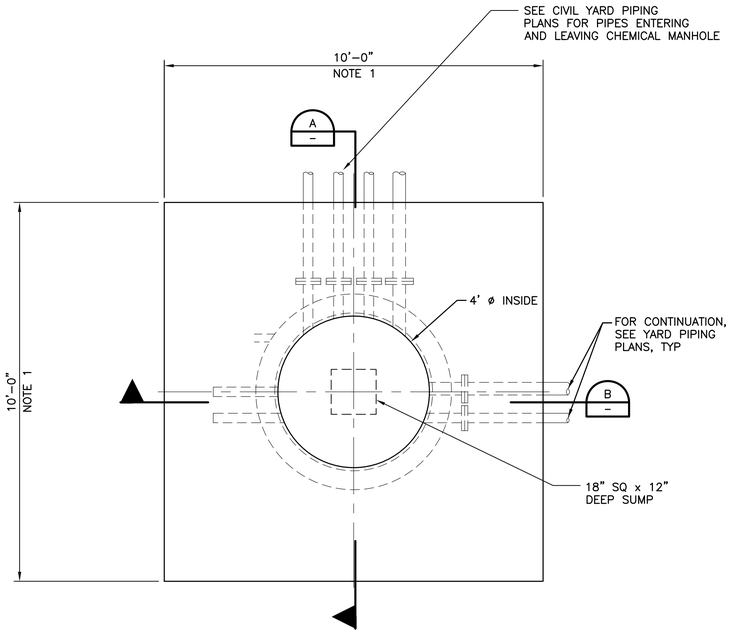


TOP PLAN
MAINTENANCE CHEMICAL MANHOLE 1
1/2" = 1'-0"

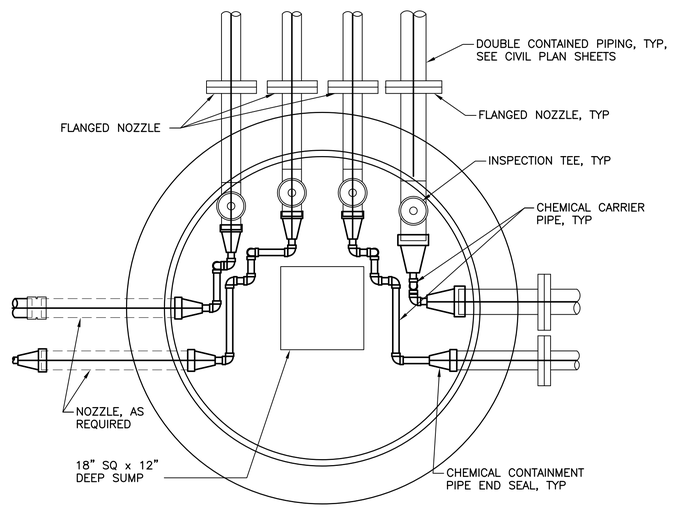


BOTTOM PLAN
CHEMICAL MAINTENANCE MANHOLE DETAIL 2
NTS

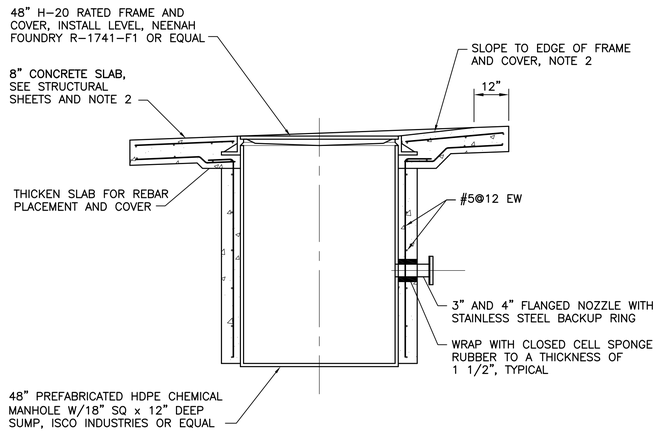


SECTION
1/2" = 1'-0" A

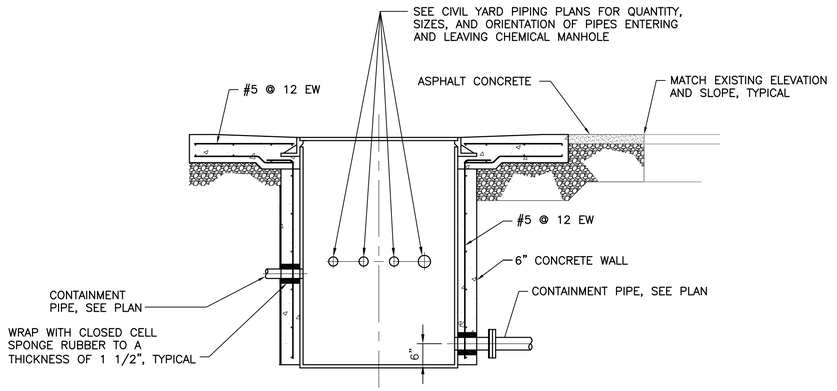


SECTION
1/2" = 1'-0" B

NOTES:

1. PROVIDE CONCRETE SLAB AS SHOWN IN PAVED AREAS. PROVIDE 1'-6" WIDE CONCRETE SLAB AROUND THE CHEMICAL MANHOLE IN DIRT AREAS.
2. SLOPE TO MATCH SURROUNDING GRADE IN PAVED AREAS. TOP OF CHEMICAL MANHOLE LID SHALL BE 2" ABOVE FINISH GRADE IN DIRT AREAS.

FILE: 215786-00C004.dwg
DATE: Oct 07, 2015-5:13:02am, rsnider

HDR Engineering, Inc.

| ISSUE | DATE | DESCRIPTION |
|---|---|---|
| A | JUNE 2015 | ISSUED FOR BID |

| | |
|---|---|
| PROJECT MANAGER | C. OLSON |
| DESIGNED | M. PERINPANAYAGAM |
| DESIGNED | |
| CHECKED | C. OLSON |
| DRAWN | P. VAN MEURS |
| DATE | JUNE 30, 2015 |
| PROJECT NUMBER | 215786 |

REGISTERED PROFESSIONAL ENGINEER
CRAIG A. OLSON
NO. 39819
EXP. 12/31/15
CIVIL
STATE OF CALIFORNIA
06-30-15

CITY OF PINOLE CALIFORNIA 1903

PINOLE/HERCULES
WATER POLLUTION
CONTROL PLANT UPGRADE
CLIENT PN

**CIVIL**

**CIVIL DETAILS 4**

0 1" 2"

| | |
|---|---|
| FILENAME | 215786-00C004 |
| SCALE | NTS |

SHEET
**00C004**

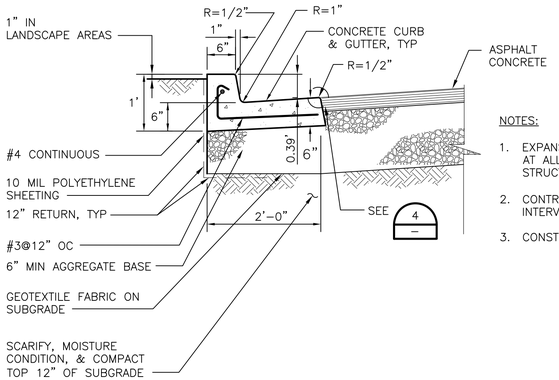


NOTES:

1. EXPANSION JOINTS AT 48' INTERVALS, AT ALL CURB RETURNS AND ALL STRUCTURES.
2. CONTRACTION JOINTS AT 10' INTERVALS.
3. CONSTRUCTION JOINTS.

## CURB AND GUTTER DETAIL 1

NTS

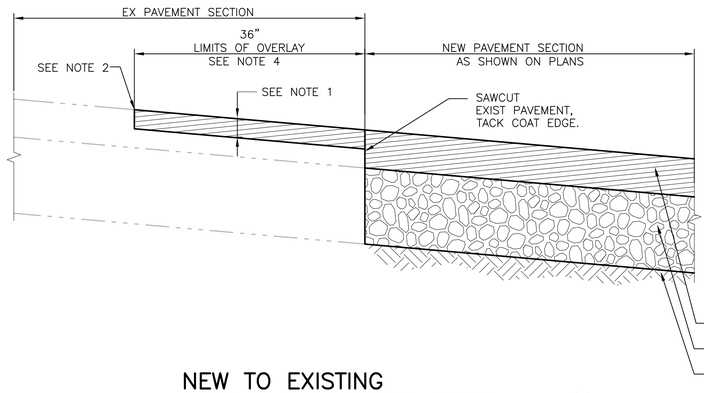


NOTE:

1. GRIND PAVEMENT TO 1.5" MIN DEPTH FOR CONFORMITY. NO FEATHERING WILL BE ALLOWED. TACK COAT EDGE.
2. EXISTING ASPHALT SHALL BE SAW CUT AT THE CONFORM TO THE FULL DEPTH OF THE GRIND TO A NEAT STRAIGHT VERTICAL EDGE.
3. GRIND PAVEMENT PER THE REQUIREMENTS OF CALTRANS SPECIFICATIONS 42-2.
4. OVERLAY AREA IS NOT SHADED AS PAVEMENT ON DRAWINGS.

## NEW TO EXISTING PAVEMENT CONFORM DETAIL 2

NTS

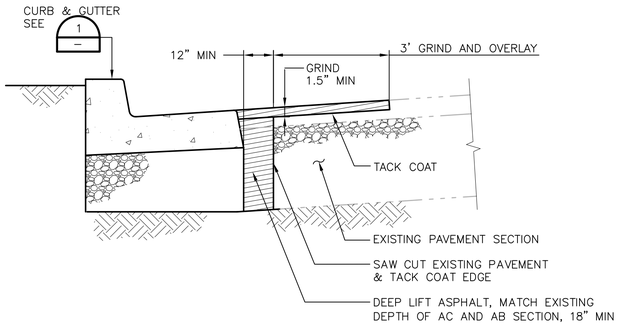


## NEW CURB AND GUTTER PAVEMENT CONFORM DETAIL 3

NTS

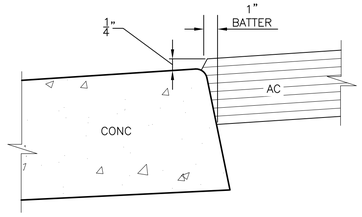


## GUTTER LIP DETAIL 4

NTS

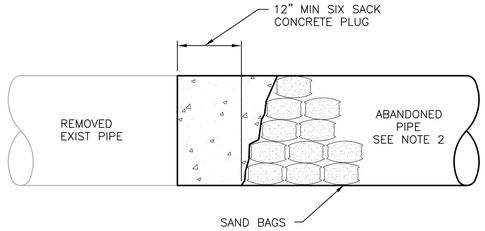


NOTES:

1. IN LIEU OF CONCRETE PLUG, CONTRACTOR MAY INSTALL APPROVED CAPS OR PLUGS THAT ARE THE SAME MATERIAL AS THE PIPE AS APPROVED BY THE ENGINEER.
2. ABANDON PIPES 15" AND LARGER SHALL BE FILLED WITH SAND OR CLSM UNLESS OTHERWISE NOTED ON THE DRAWINGS.

## PIPE ABANDONMENT DETAIL 5

NTS

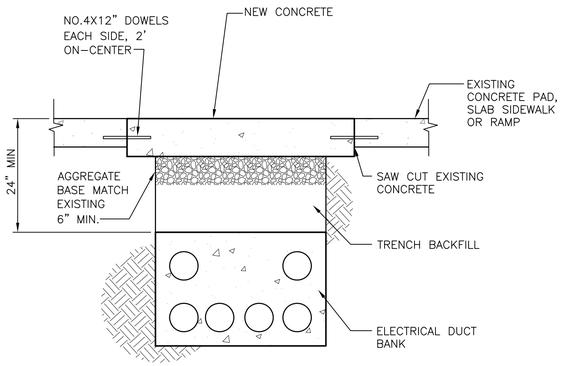


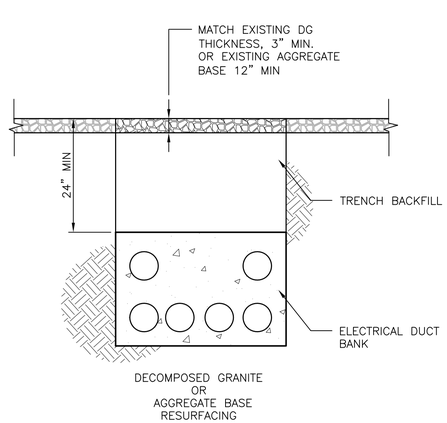


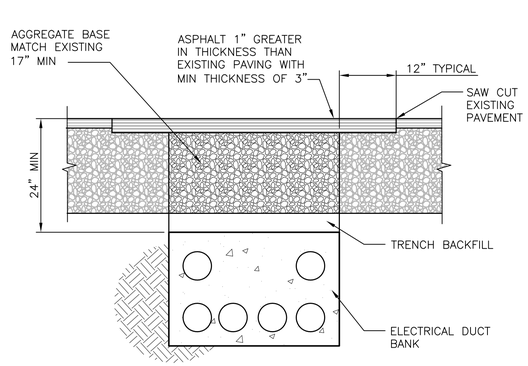


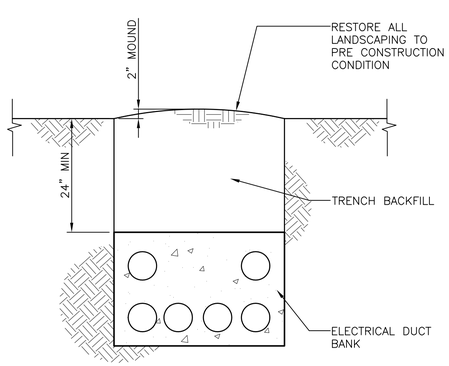


## TYPICAL ELECTRICAL DUCT BANK TRENCH RESURFACING DETAIL 6

NTS

FILE: 215786-00C005.dwg
DATE: Oct 07, 2015-5:13:10am, ranider

HDR Engineering, Inc.

| ISSUE | DATE | DESCRIPTION |
|---|---|---|
| A | JUNE 2015 | ISSUED FOR BID |

| | |
|---|---|
| PROJECT MANAGER | C. OLSON |
| DESIGNED | M. PERINPANAYAGAM |
| DESIGNED | |
| CHECKED | C. OLSON |
| DRAWN | P. VAN MEURS |
| DATE | JUNE 30, 2015 |
| PROJECT NUMBER | 215786 |

REGISTERED PROFESSIONAL ENGINEER
ERATC A. OLSON
NO. 39819
EXP. 12/31/15
CIVIL
STATE OF CALIFORNIA
06-30-15

CITY OF PINOLE CALIFORNIA 1903

PINOLE/HERCULES
WATER POLLUTION
CONTROL PLANT UPGRADE
CLIENT PN

**CIVIL**

**CIVIL DETAILS 5**

0 1" 2"

| | |
|---|---|
| FILENAME | 215786-00C005 |
| SCALE | NTS |

SHEET **00C005**

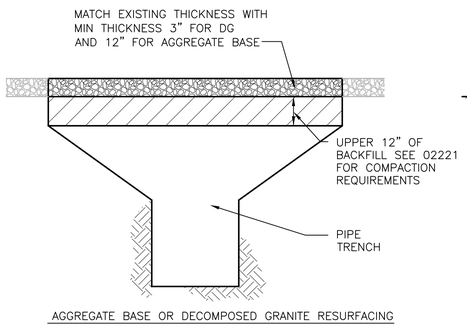


AGGREGATE BASE OR DECOMPOSED GRANITE RESURFACING

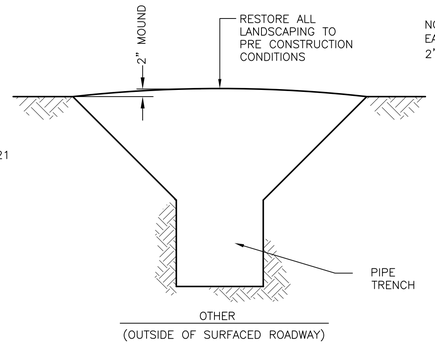


OTHER
(OUTSIDE OF SURFACED ROADWAY)

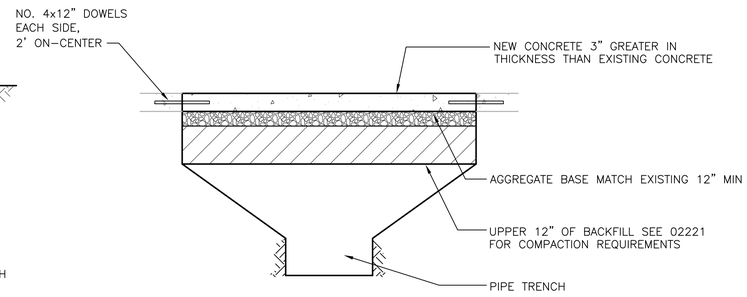


CONCRETE RESURFACING

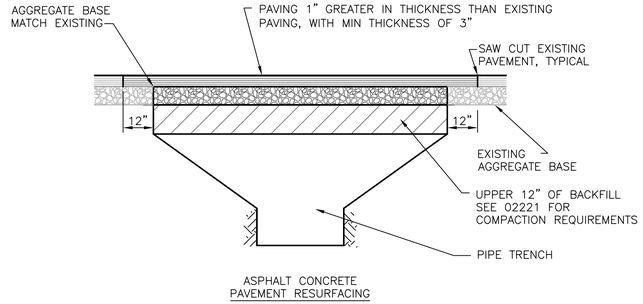


ASPHALT CONCRETE
PAVEMENT RESURFACING

## TYPICAL PIPE TRENCH RESURFACING DETAIL

1

NTS

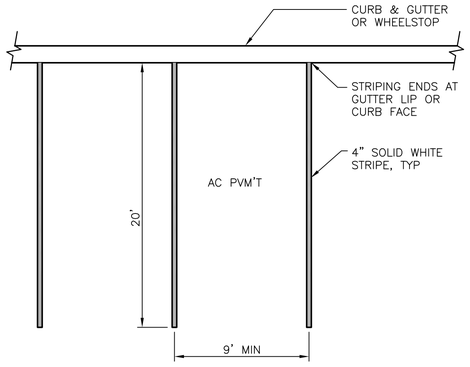


## TYPICAL PARKING STALL DETAIL

2

NTS

FILE: 215786-00C006.dwg
DATE: Oct 07, 2015-5:13:15pm, rsnider

HDR Engineering, Inc.

| ISSUE | DATE | DESCRIPTION |
|---|---|---|
| | | |
| | | |
| | | |
| | | |
| | | |
| | | |
| | | |
| A | JUNE 2015 | ISSUED FOR BID |

| | |
|---|---|
| PROJECT MANAGER | C. OLSON |
| | |
| DESIGNED | M. PERINPANAYAGAM |
| DESIGNED | |
| CHECKED | C. OLSON |
| DRAWN | P. VAN MEURS |
| DATE | JUNE 30, 2015 |
| | |
| PROJECT NUMBER | 215786 |

REGISTERED PROFESSIONAL ENGINEER
CRAIG A. OLSON
NO. 39819
EXP. 12/31/15
CIVIL
STATE OF CALIFORNIA
06-30-15

CITY OF PINOLE CALIFORNIA 1903

PINOLE/HERCULES
WATER POLLUTION
CONTROL PLANT UPGRADE
CLIENT PN

**CIVIL**

**CIVIL DETAILS 6**

0 1" 2"

| | |
|---|---|
| FILENAME | 215786-00C006 |
| SCALE | NTS |

SHEET
**00C006**

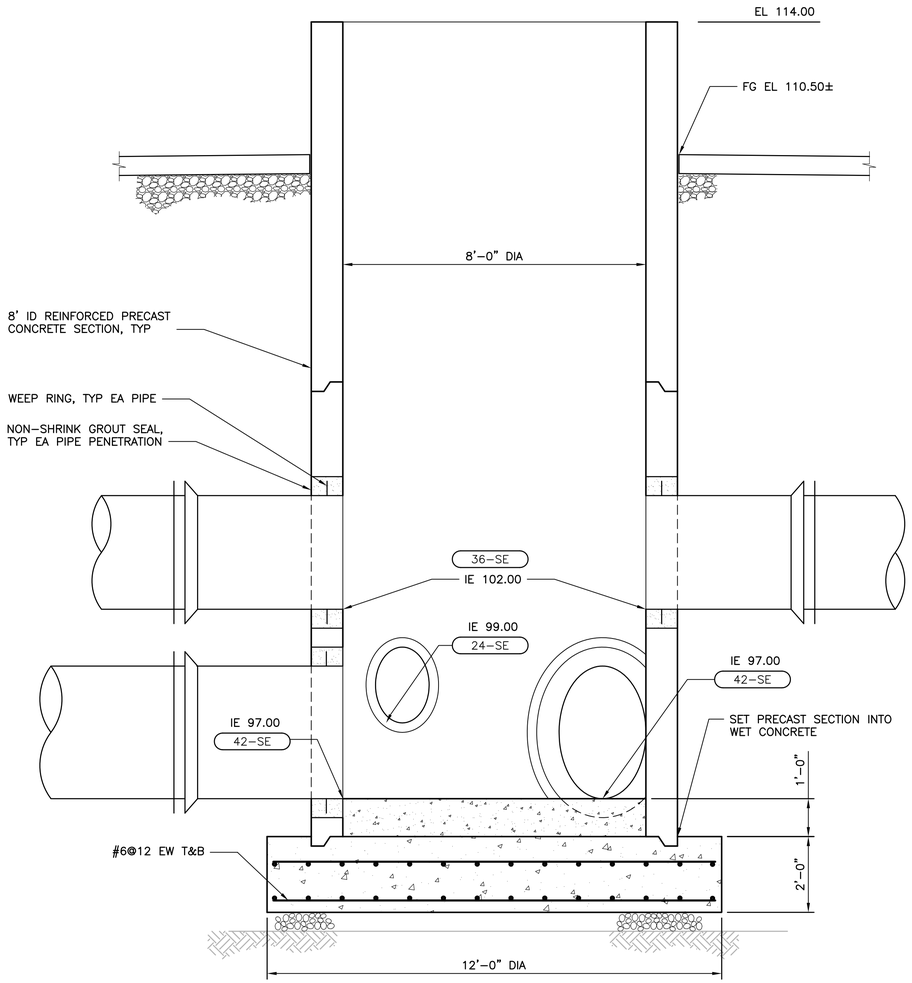


NOTE: SEE PLAN VIEW FOR TRUE ORIENTATION OF PIPING AND APPURTENANCES.

## SECTION
1/2" = 1'–0"

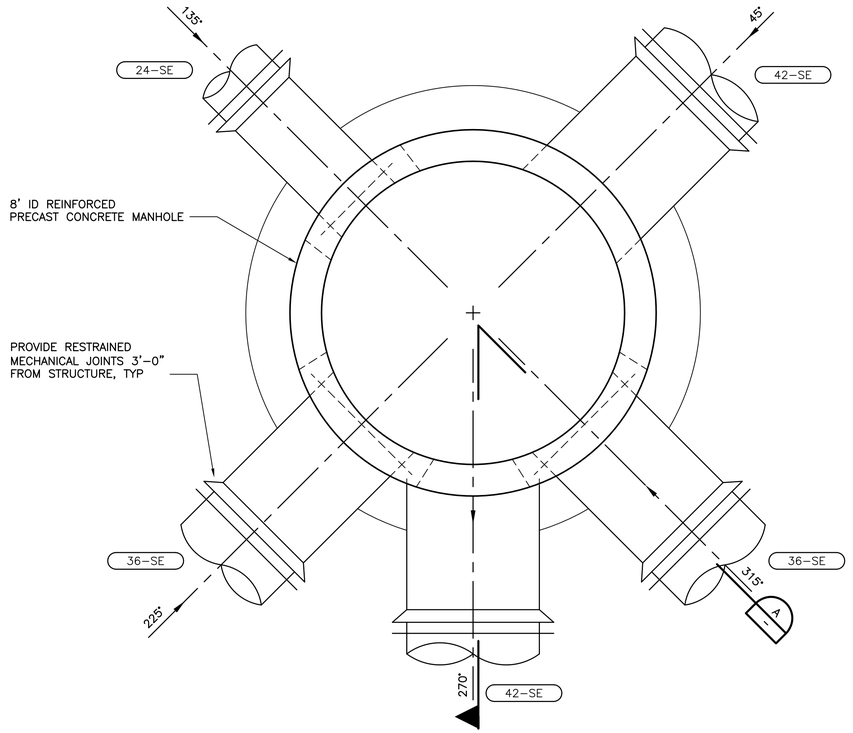


## SECTIONAL PLAN VIEW SECONDARY EFFLUENT JUNCTION BOX
1/2" = 1'–0"

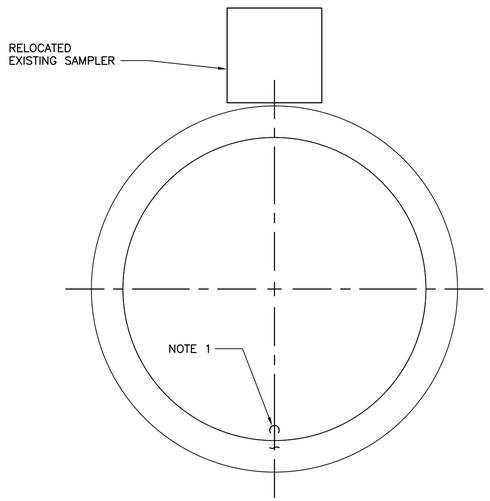


## TOP PLAN VIEW SECONDARY EFFLUENT JUNCTION BOX
1/2" = 1'–0"

NOTES:

1. SEE DETAIL 1 ON SHEET 00P006 FOR SAMPLE INTAKE INSTALLATION.

FILE: 00C007.dwg
DATE: Oct 07, 2015–5:11:59am, rsnider

HDR Engineering, Inc.

| ISSUE | DATE | DESCRIPTION |
|---|---|---|
| A | JUNE 2015 | ISSUED FOR BID |

| | |
|---|---|
| PROJECT MANAGER | C. OLSON |
| | |
| DESIGNED | R. NATOLI |
| DESIGNED | |
| CHECKED | C. OLSON |
| DRAWN | P. VAN MEURS |
| DATE | JUNE 30, 2015 |
| PROJECT NUMBER | 215786 |

REGISTERED PROFESSIONAL ENGINEER
CRAIG A. OLSON
NO. 39819
EXP. 12/31/15
CIVIL
STATE OF CALIFORNIA
06-30-15

CITY OF PINOLE CALIFORNIA 1903

PINOLE/HERCULES
WATER POLLUTION
CONTROL PLANT UPGRADE
CLIENT PN

**CIVIL**

**CIVIL DETAILS 7**

0 1" 2"

| | |
|---|---|
| FILENAME | 00C007 |
| SCALE | AS NOTED |

SHEET **00C007**

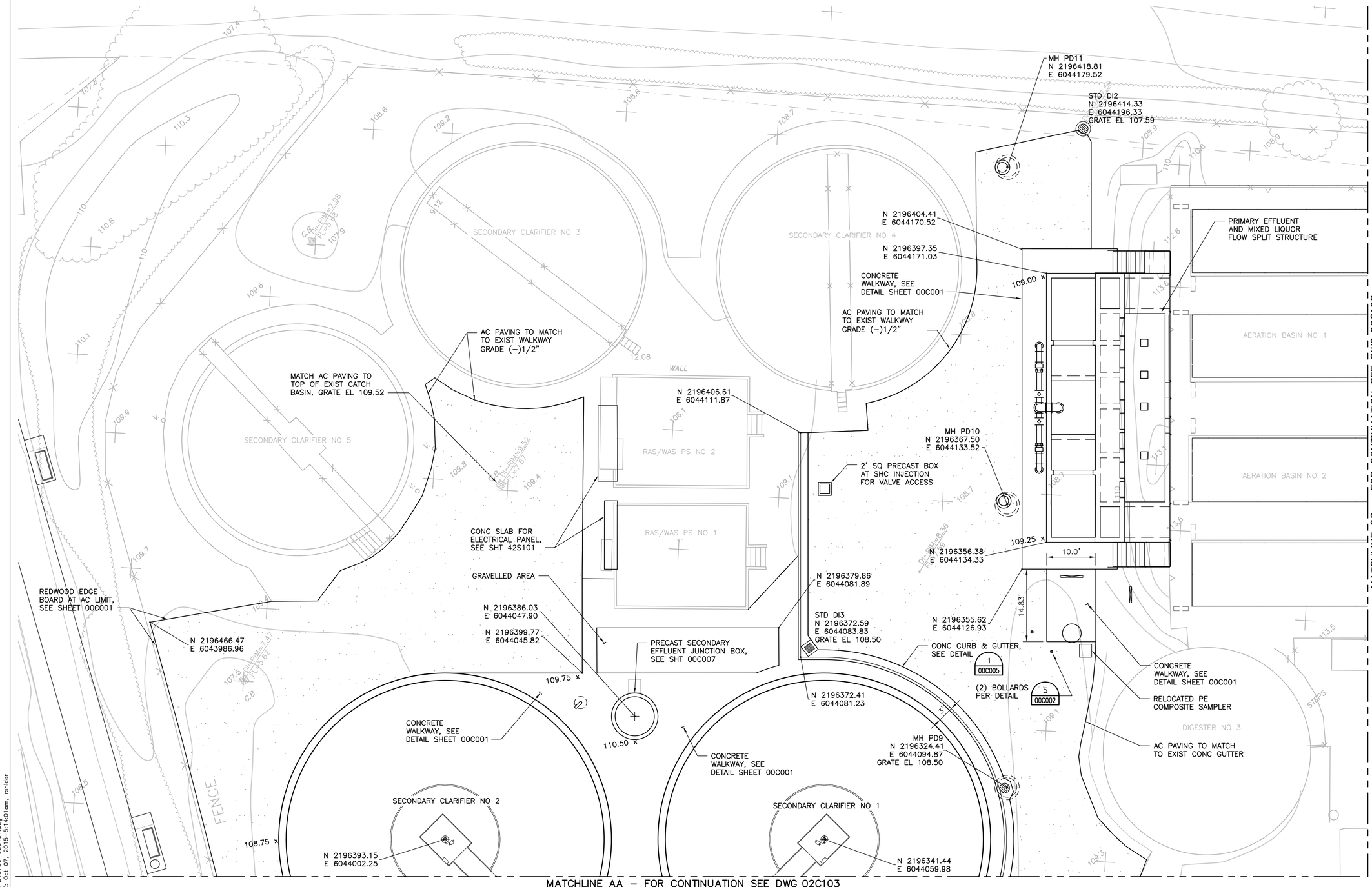


NOTES:

1. SPOT ELEVATIONS OF EXISTING GRADING AND PAVING ARE PROVIDED FOR REFERENCE AND ARE TO BE FOLLOWED FOR NEW GRADING AND PAVING WHERE NO OTHER DESIGN INPUT IS GIVEN.
2. SLOPE GRADE UNIFORMLY TO STORM DRAIN DROP INLETS WHEREVER SHOWN.

| | |
|---|---|
| AREA 1 | AREA 2 |
| AREA 3 | AREA 4 |
| AREA 5 | AREA 6 |

FILE: 215786-02C101.dwg
DATE: Oct 07, 2015-5:14:01am, rsnider

HDR Engineering, Inc.

| | | |
|---|---|---|
| A | JUNE 2015 | ISSUED FOR BID |
| ISSUE | DATE | DESCRIPTION |

| | |
|---|---|
| PROJECT MANAGER | C. OLSON |
| | |
| DESIGNED | M. PERINPANAYAGAM |
| DESIGNED | |
| CHECKED | C. OLSON |
| DRAWN | P. VAN MEURS |
| DATE | JUNE 30, 2015 |
| | |
| PROJECT NUMBER | 215786 |

REGISTERED PROFESSIONAL ENGINEER
CRAIG A. OLSON
NO. 39819
EXP. 12/31/15
CIVIL
STATE OF CALIFORNIA
06-30-15

CITY OF PINOLE CALIFORNIA 1903

PINOLE/HERCULES
WATER POLLUTION
CONTROL PLANT UPGRADE
CLIENT PN

**CIVIL**

**GRADING AND PAVING PLAN**
**AREA 1**

0 1" 2"

| | |
|---|---|
| FILENAME | 215786-02C101 |
| SCALE | 1" = 10' |

SHEET **02C101**

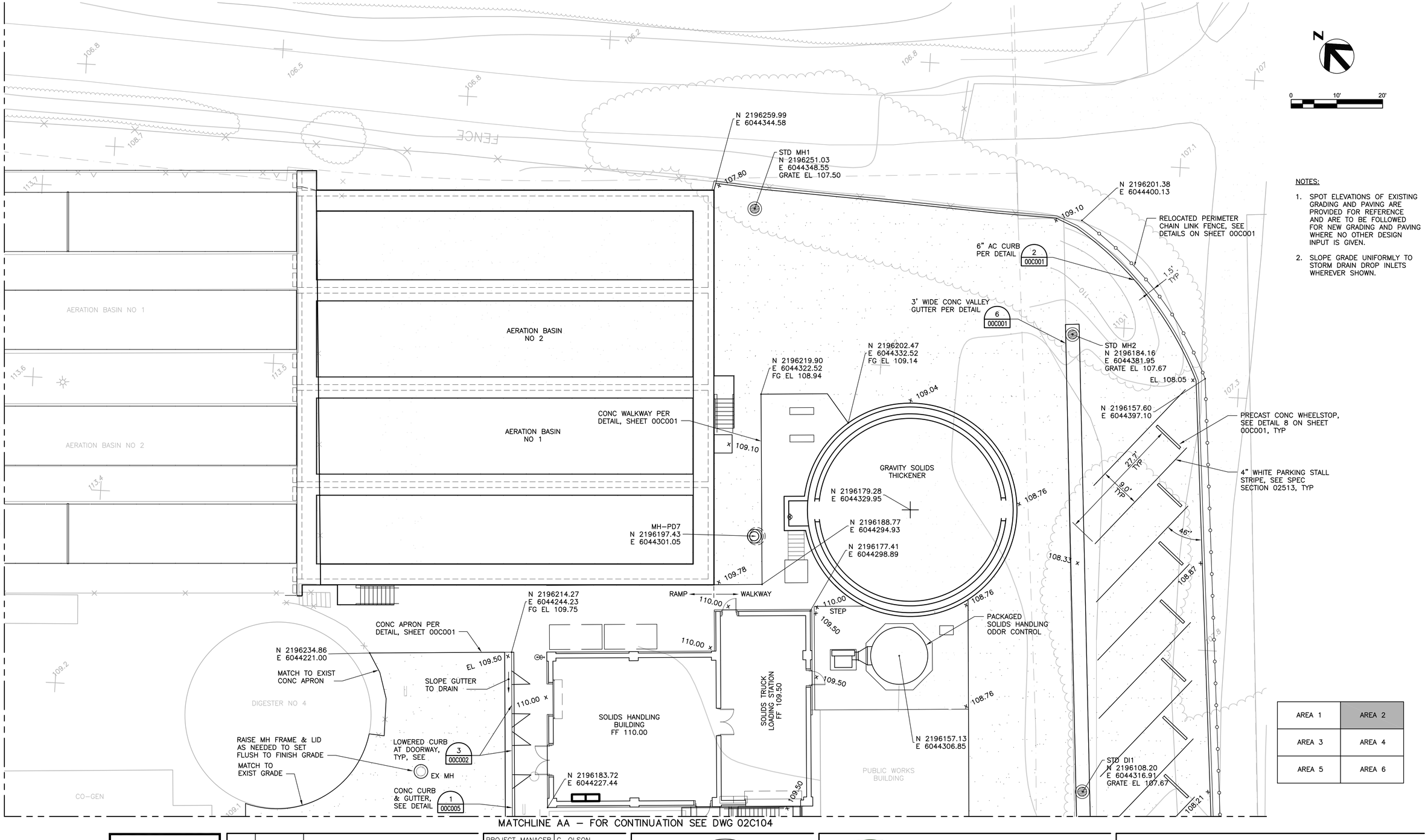


NOTES:

1. SPOT ELEVATIONS OF EXISTING GRADING AND PAVING ARE PROVIDED FOR REFERENCE AND ARE TO BE FOLLOWED FOR NEW GRADING AND PAVING WHERE NO OTHER DESIGN INPUT IS GIVEN.
2. SLOPE GRADE UNIFORMLY TO STORM DRAIN DROP INLETS WHEREVER SHOWN.

| | |
|---|---|
| AREA 1 | AREA 2 |
| AREA 3 | AREA 4 |
| AREA 5 | AREA 6 |

FILE: 215786-02C102.dwg
DATE: Oct 07, 2015-5:14:38am, rsnider

HDR
HDR Engineering, Inc.

| ISSUE | DATE | DESCRIPTION |
|---|---|---|
| A | JUNE 2015 | ISSUED FOR BID |

| | |
|---|---|
| PROJECT MANAGER | C. OLSON |
| DESIGNED | M. PERINPANAYAGAM |
| DESIGNED | |
| CHECKED | C. OLSON |
| DRAWN | P. VAN MEURS |
| DATE | JUNE 30, 2015 |
| PROJECT NUMBER | 215786 |

REGISTERED PROFESSIONAL ENGINEER
CRAIG A. OLSON
NO. 39819
EXP. 12/31/15
CIVIL
STATE OF CALIFORNIA
06-30-15

CITY OF PINOLE CALIFORNIA 1903

PINOLE/HERCULES WATER POLLUTION CONTROL PLANT UPGRADE CLIENT PN

**CIVIL**

**GRADING AND PAVING PLAN AREA 2**

0 1" 2"

| | |
|---|---|
| FILENAME | 215786-02C102 |
| SCALE | 1" = 10' |

SHEET 02C102

MATCHLINE AA – FOR CONTINUATION SEE DWG 02C101

SECONDARY CLARIFIER NO 2

SECONDARY CLARIFIER NO 1

R=37.25' FACE OF CURB

GRAVELLED AREA

27.48'

39.98' TYP

MH PD12
N 2196335.16
E 6044010.41
GRATE EL 108.61

STD DI4
N 2196387.44
E 6043952.52
GRATE EL 107.25

109.00

CONC WALKWAY PER DETAIL, SHEET 00C001

10.58' CLEAR

N 2196330.44
E 6044000.61

CONC CURB & GUTTER, SEE DETAIL 1 00C005

108.90

109.33

MH PD8
N 2196279.52
E 6044054.62

DIGESTER NO 1

AC PAVING TO MATCH TO EXIST CONC GUTTER

N 2196263.75
E 6044049.94

ADJUST EXIST MH LID AS REQD

CHLORINE CONTACT BASINS

SODIUM HYDROXIDE STORAGE/FEED

N 2196357.45
E 6043931.69

MAINTENANCE CHEMICAL MANHOLE, SEE 00C004

AC PAVING TO MATCH TO EXIST CONC GUTTER

(3) BOLLARDS AT 5' CENTERS PER 5 00C002

MATCH TO EXIST SAWCUT CONC PAVING

PRIMARY CLARIFIER NO 1

STD DI5
N 2196221.86
E 6044008.90
GRATE EL 108.01

CONC WALKWAY PER DETAIL, SHEET 00C001, MATCH TO EXIST SAWCUT EDGES

N 2196208.14
E 6044047.16

PRIMARY CLARIFIER NO 3

STD DI6
N 2196214.50
E 6044018.78
GRATE EL 107.89

108.60

CHLORINE CONTACT BASINS

WALL

EMERGENCY OUTFALL STRUCTURE

PE/SE JUNCTION BOX

PE/SE JUNCTION BOX

PRIMARY CLARIFIER INFLUENT DISTRIBUTION BOX

MH PD14
N 2196212.54
E 6044012.45

109.0

109.3

CONC WALKWAY PER DETAIL, SHEET 00C001

CONC CURB & GUTTER, SEE DETAIL 1 00C005

HYPOCHLORITE & BISULFITE STORAGE TANKS/ CONTAINMENT AREA, SEE SHT 75P101

N 2196317.16
E 6043888.76

RELOCATED PERIMETER CHAIN LINK FENCE, SEE DETAILS ON SHEET 00C001

SCUM BOX

CONC CURB & GUTTER, SEE DETAIL 1 00C005

EFFLUENT PUMPING STATION AND SURGE TANK, SEE SHT 91P101

PRIMARY CLARIFIER NO 2

MAINTENANCE CHEMICAL MANHOLE, SEE 00C004

STD DI8
N 2196147.42
E 6044021.94
GRATE EL 108.12

MATCHLINE CC – FOR CONTINUATION SEE DWG 02C104

MATCHLINE BB – FOR CONTINUATION SEE DWG 02C105

N

0 10' 20'

NOTES:

1. SPOT ELEVATIONS OF EXISTING GRADING AND PAVING ARE PROVIDED FOR REFERENCE AND ARE TO BE FOLLOWED FOR NEW GRADING AND PAVING WHERE NO OTHER DESIGN INPUT IS GIVEN.
2. SLOPE GRADE UNIFORMLY TO STORM DRAIN DROP INLETS WHEREVER SHOWN.

| | |
|---|---|
| AREA 1 | AREA 2 |
| AREA 3 | AREA 4 |
| AREA 5 | AREA 6 |

FILE: 215786-02C103.dwg
DATE: Oct 07, 2015-5:15:16am, rsnider

HDR Engineering, Inc.

| ISSUE | DATE | DESCRIPTION |
|---|---|---|
| A | JUNE 2015 | ISSUED FOR BID |

| | |
|---|---|
| PROJECT MANAGER | C. OLSON |
| DESIGNED | M. PERINPANAYAGAM |
| DESIGNED | |
| CHECKED | C. OLSON |
| DRAWN | P. VAN MEURS |
| DATE | JUNE 30, 2015 |
| PROJECT NUMBER | 215786 |

REGISTERED PROFESSIONAL ENGINEER
CRAIG A. OLSON
NO. 39819
EXP. 12/31/15
CIVIL
STATE OF CALIFORNIA

CITY OF PINOLE CALIFORNIA 1903

PINOLE/HERCULES
WATER POLLUTION
CONTROL PLANT UPGRADE
CLIENT PN

**CIVIL**

**GRADING AND PAVING PLAN AREA 3**

0 1" 2"

| | |
|---|---|
| FILENAME | 215786-02C103 |
| SCALE | 1" = 10' |

SHEET **02C103**

MATCHLINE AA – FOR CONTINUATION SEE DWG 02C102

MATCHLINE CC – FOR CONTINUATION SEE DWG 02C103

MATCHLINE BB – FOR CONTINUATION SEE DWG 02C106

CO-GEN

DIGESTER NO 2

DIGESTER NO 2

MAINTENANCE SHOP

PUBLIC WORKS BUILDING

BLOWER BUILDING

CONTROL BUILDING

FENCE

PLANT ENTRANCE GATE

EXISTING CONCRETE SLAB AT FILLING STATION

CONC CURB & GUTTER, SEE DETAIL 1 / 00C005

3' WIDE CONC VALLEY GUTTER PER DETAIL 7 / 00C005

PRECAST CONCRETE WHEELSTOP, TYP, SEE DETAIL ON SHEET 00C01

4" WHITE PAINTED STRIPE PER SPEC SECTION 02513, TYP

6" AC CURB PER DETAIL 2 / 00C001

MATCH AC PAVING TO EXISTING CONCRETE PAVING, TYP

MATCH AC PAVING TO EXISTING CONCRETE GUTTER, TYP

MATCH AC PAVING TO EXISTING SAWCUT EDGE, TYP

SAWCUT EXISTING AC PAVEMENT, TYP

SEE AC PAVING DETAIL, SHEET 00C001

RELOCATED PERIMETER CHAIN LINK FENCE, SEE DETAILS ON SHEET 00C001

STD DI11
N 2196193.75
E 6044106.47
GRATE EL 108.19

EX MH

MH PD5
N 2196152.42
E 6044160.33

MH PD6
N 2196112.74
E 6044226.00

MH H2
N 2196127.31
E 6044182.39

STD DI10
N 2196103.11
E 6044207.41
GRATE EL 108.37

MH H1
N 2196104.04
E 6044161.45

MH PD4
N 2196196.12
E 6044088.01

STD DI12
N 2196138.86
E 6044056.98
GRATE EL 108.12

MH PD3
N 2196136.22
E 6044034.47

MH 3
N 2196061.85
E 6044123.48

MH P1
N 2196041.93
E 6044145.28

N 2196072.56
E 6044325.97

N 2196056.51
E 6044310.60

N 2196057.64
E 6044273.64

N 2196036.36
E 6044276.00

N 2196005.42
E 6044247.79

27.1' TYP

9' TYP

45.6°

1.5'

N

0 10' 20'

NOTES:

1. SPOT ELEVATIONS OF EXISTING GRADING AND PAVING ARE PROVIDED FOR REFERENCE AND ARE TO BE FOLLOWED FOR NEW GRADING AND PAVING WHERE NO OTHER DESIGN INPUT IS GIVEN.
2. SLOPE GRADE UNIFORMLY TO STORM DRAIN DROP INLETS WHEREVER SHOWN.

| | |
|---|---|
| AREA 1 | AREA 2 |
| AREA 3 | AREA 4 |
| AREA 5 | AREA 6 |

FILE: 215786-02C104.dwg
DATE: Oct 07, 2015-5:15:56am, rsnider

HDR Engineering, Inc.

| ISSUE | DATE | DESCRIPTION |
|---|---|---|
| A | JUNE 2015 | ISSUED FOR BID |

| | |
|---|---|
| PROJECT MANAGER | C. OLSON |
| DESIGNED | M. PERINPANAYAGAM |
| DESIGNED | |
| CHECKED | C. OLSON |
| DRAWN | P. VAN MEURS |
| DATE | JUNE 30, 2015 |
| PROJECT NUMBER | 215786 |

REGISTERED PROFESSIONAL ENGINEER
CRAIG A. OLSON
NO. 39819
EXP. 12/31/15
CIVIL
STATE OF CALIFORNIA
06-30-15

CITY OF PINOLE CALIFORNIA 1903

PINOLE/HERCULES
WATER POLLUTION
CONTROL PLANT UPGRADE
CLIENT PN

CIVIL

GRADING AND PAVING PLAN
AREA 4

0 1" 2"

| | |
|---|---|
| FILENAME | 215786-02C104 |
| SCALE | 1" = 10' |

SHEET 02C104

MATCHLINE BB – FOR CONTINUATION SEE DWG 02C103

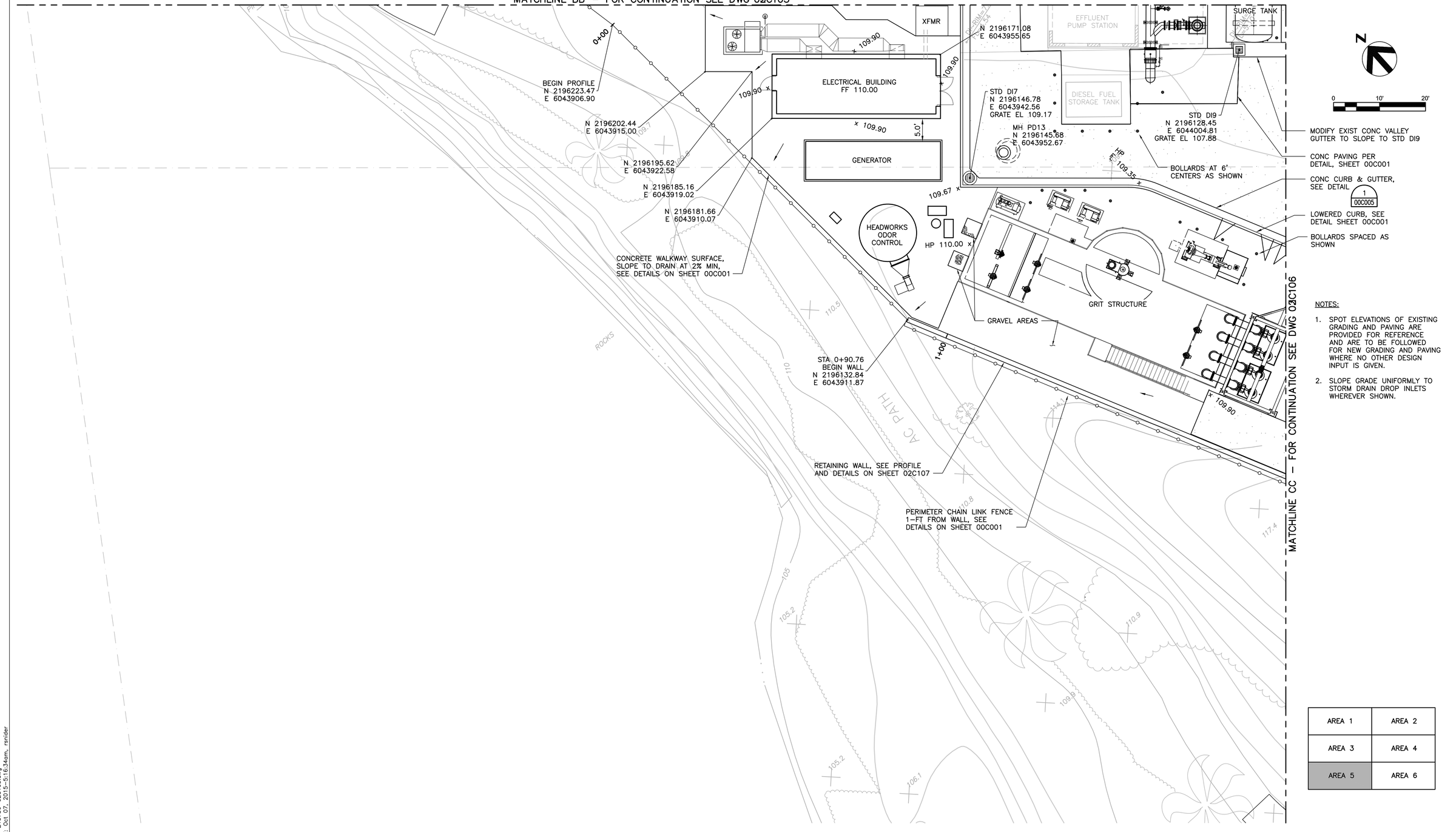


NOTES:

1. SPOT ELEVATIONS OF EXISTING GRADING AND PAVING ARE PROVIDED FOR REFERENCE AND ARE TO BE FOLLOWED FOR NEW GRADING AND PAVING WHERE NO OTHER DESIGN INPUT IS GIVEN.
2. SLOPE GRADE UNIFORMLY TO STORM DRAIN DROP INLETS WHEREVER SHOWN.

| | |
|---|---|
| AREA 1 | AREA 2 |
| AREA 3 | AREA 4 |
| AREA 5 | AREA 6 |

FILE: 215786-02C105.dwg
DATE: Oct 07, 2015-5:16:34am, rsnider

HDR Engineering, Inc.

| ISSUE | DATE | DESCRIPTION |
|---|---|---|
| A | JUNE 2015 | ISSUED FOR BID |

| | |
|---|---|
| PROJECT MANAGER | C. OLSON |
| DESIGNED | M. PERINPANAYAGAM |
| DESIGNED | |
| CHECKED | C. OLSON |
| DRAWN | P. VAN MEURS |
| DATE | JUNE 30, 2015 |
| PROJECT NUMBER | 215786 |

REGISTERED PROFESSIONAL ENGINEER
CRAIG A. OLSON
NO. 39819
EXP. 12/31/15
CIVIL
STATE OF CALIFORNIA
06-30-15

CITY OF PINOLE CALIFORNIA 1903

PINOLE/HERCULES
WATER POLLUTION
CONTROL PLANT UPGRADE
CLIENT PN

**CIVIL**

**GRADING AND PAVING PLAN AREA 5**

0 1" 2"

| | |
|---|---|
| FILENAME | 215786-02C105 |
| SCALE | 1" = 10' |

SHEET **02C105**

MATCHLINE BB – FOR CONTINUATION SEE DWG 02C104

MATCHLINE CC – FOR CONTINUATION SEE DWG 02C105

MATCH AC PAVING TO EXISTING CONCRETE GUTTER, TYP

MATCH AC PAVING TO EXISTING CONCRETE GUTTER, TYP

4+00

MH PD2
N 2196100.72
E 6044002.74

MH PDFM
N 2196082.69
E 6044011.39

MH 2
N 2196020.73
E 6044086.46

HP 109.30

x 109.90

DENSE TREES AND BRUSH GROUND NOT VISIBLE

STA 3+81.74
END WALL/BEGIN FENCE
N 2195996.44
E 6044119.37

N 2195995.83
E 6044110.69

CONC CURB & GUTTER, SEE DETAIL 1 / 00C005

CONC APRON PER DETAIL, SHEET 00C001

MH PD1
N 2196057.06
E 6044023.69

LOWERED CURB, SEE DETAIL SHEET 00C001

HP 109.90 x

PUBLIC WORKS BUILDING

AC PARKING

HP 109.35 x

HP 109.60 x

N 2196004.17
E 6044055.86

109.90 x

109.90 x

N 2195979.28
E 6044063.19

FERRIC CHLORIDE CHEMICAL STORAGE & FEED

HEADWORKS

MH 1
N 2196015.72
E 6043990.84

PUBLIC RESTROOM

2+00

x 110.10

A / 02C107

N 2196014.16
E 6043968.81

STD DI14
N 2196027.91
E 6043967.43
GRATE EL 108.90

RETAINING WALL, SEE PROFILE AND DETAILS ON SHEET 02C107

PERIMETER CHAIN LINK FENCE 1-FT FROM WALL, SEE DETAILS ON SHEET 00C001

AC PATH

N

0 10' 20'

NOTES:

1. SPOT ELEVATIONS OF EXISTING GRADING AND PAVING ARE PROVIDED FOR REFERENCE AND ARE TO BE FOLLOWED FOR NEW GRADING AND PAVING WHERE NO OTHER DESIGN INPUT IS GIVEN.
2. SLOPE GRADE UNIFORMLY TO STORM DRAIN DROP INLETS WHEREVER SHOWN.

| | |
|---|---|
| AREA 1 | AREA 2 |
| AREA 3 | AREA 4 |
| AREA 5 | AREA 6 |

FILE: 215786-02C106.dwg
DATE: Oct 07, 2015-5:17:12am, rsnider

HDR Engineering, Inc.

| ISSUE | DATE | DESCRIPTION |
|---|---|---|
| A | JUNE 2015 | ISSUED FOR BID |

| | |
|---|---|
| PROJECT MANAGER | C. OLSON |
| DESIGNED | M. PERINPANAYAGAM |
| DESIGNED | |
| CHECKED | C. OLSON |
| DRAWN | P. VAN MEURS |
| DATE | JUNE 30, 2015 |
| PROJECT NUMBER | 215786 |

REGISTERED PROFESSIONAL ENGINEER
CRAIG A. OLSON
NO. 39819
EXP. 12/31/15
CIVIL
STATE OF CALIFORNIA
06-30-15

CITY OF PINOLE CALIFORNIA 1903

PINOLE/HERCULES
WATER POLLUTION
CONTROL PLANT UPGRADE
CLIENT PN

**CIVIL**

**GRADING AND PAVING PLAN AREA 6**

0 1" 2"

| | |
|---|---|
| FILENAME | 215786-02C106 |
| SCALE | 1" = 10' |

SHEET **02C106**

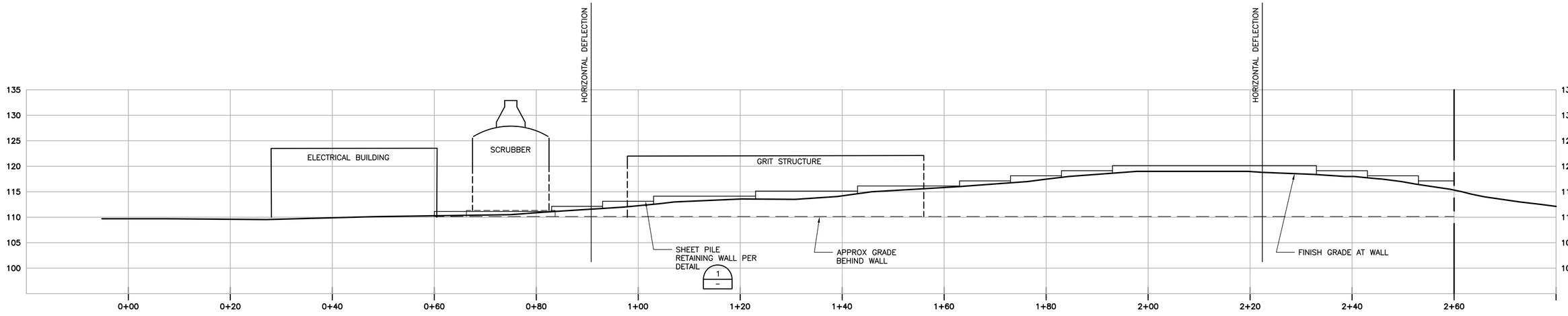


## RETAINING WALL PROFILE

1" = 10'

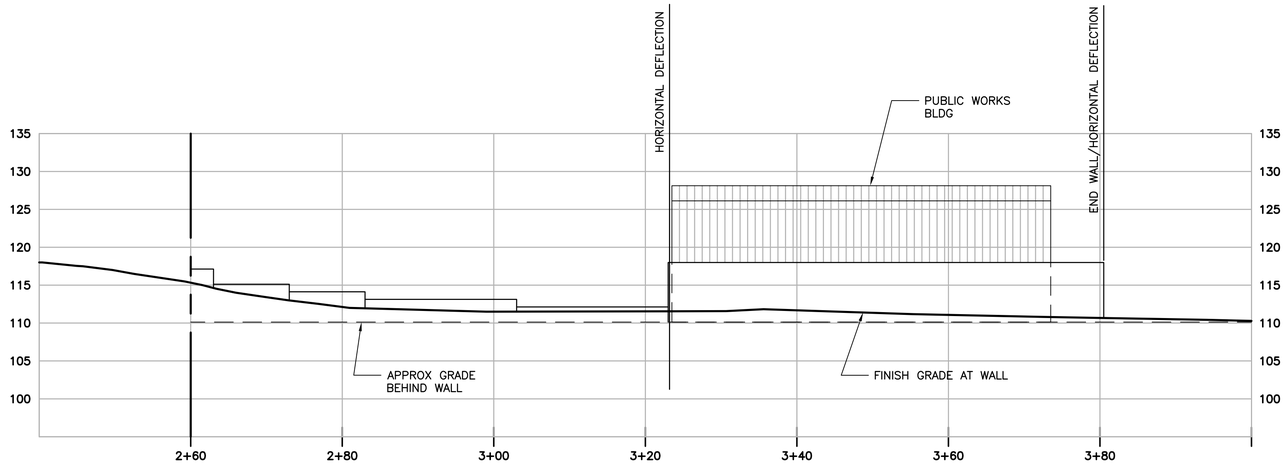


## (CONTINUED) RETAINING WALL PROFILE

1" = 10'

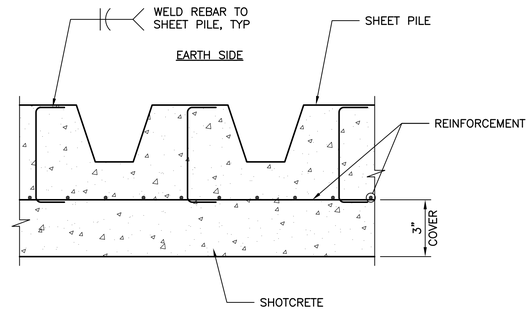


## SECTIONAL PLAN VIEW SHEET PILE RETAINING WALL

1
–

NONE

FILE: 215786-02C107.dwg
DATE: Oct 07, 2015-5:17:29am, rsnider

HDR Engineering, Inc.

| ISSUE | DATE | DESCRIPTION |
|---|---|---|
| A | JUNE 2015 | ISSUED FOR BID |

| | |
|---|---|
| PROJECT MANAGER | C. OLSON |
| DESIGNED | M. PERINPAYANAGAM |
| DESIGNED | |
| CHECKED | C. OLSON |
| DRAWN | P. VAN MEURS |
| DATE | JUNE 30, 2015 |
| PROJECT NUMBER | 215786 |

REGISTERED PROFESSIONAL ENGINEER
CRAIG A. OLSON
NO. 39819
EXP. 12/31/15
CIVIL
STATE OF CALIFORNIA

CITY OF PINOLE CALIFORNIA 1903

PINOLE/HERCULES
WATER POLLUTION
CONTROL PLANT UPGRADE
CLIENT PN

**CIVIL**

**RETAINING WALL PROFILE AND DETAIL**

0 1" 2"

| | |
|---|---|
| FILENAME | 215786-02C107 |
| SCALE | AS NOTED |

SHEET **02C107**

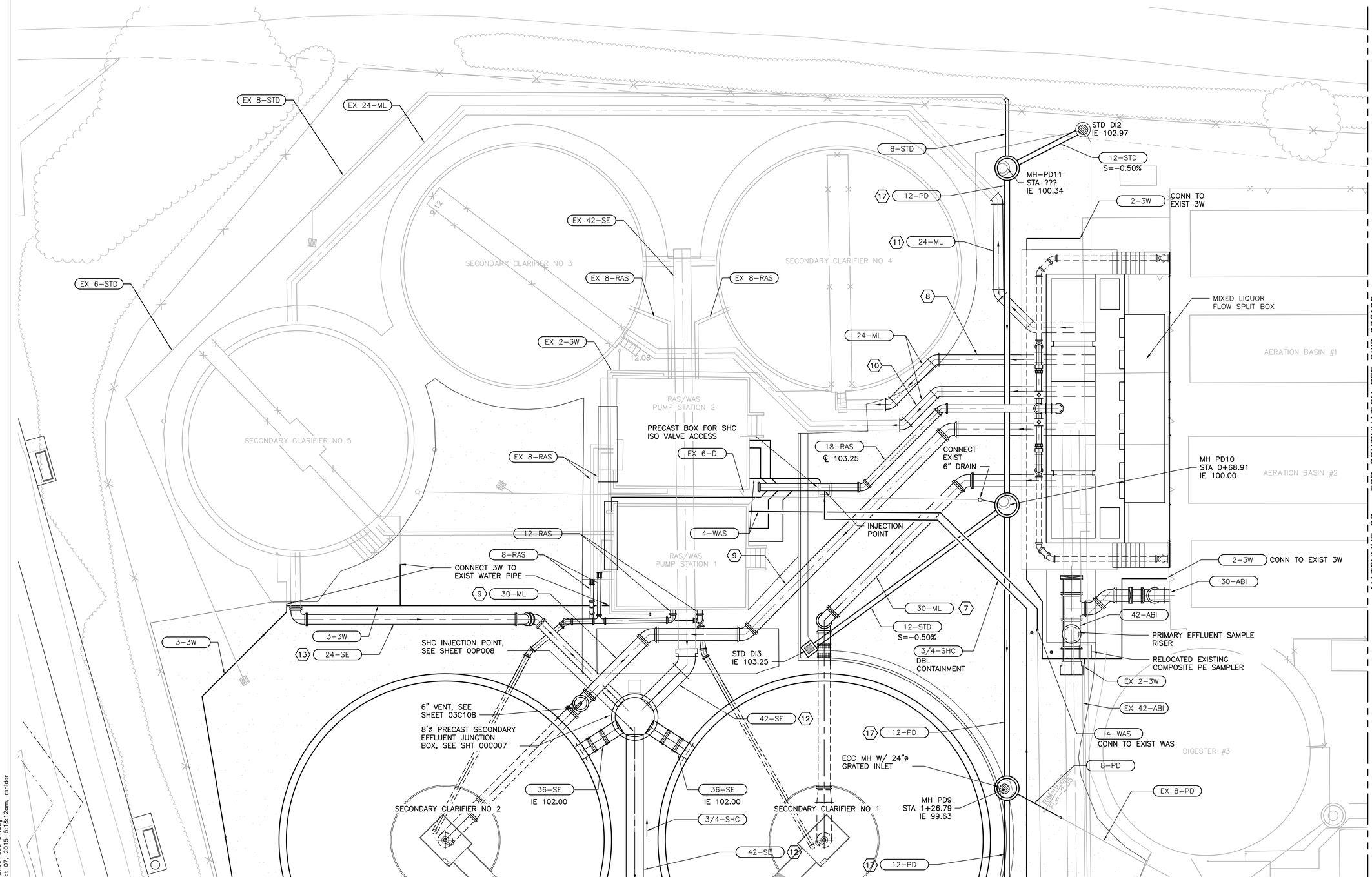


LEGEND

(X) DENOTES PROFILE AS SHOWN ON SHEETS 03C107 THROUGH 03C110

GENERAL NOTES:

1. EXISTING SITE CONDITION MAY DIFFER FROM RECORD DRAWINGS. CONTRACTOR TO FIELD VERIFY EXISTING PIPE SIZE, ELEVATION, AND MATERIAL.
2. PIPES TO BE BURIED MINIMUM 3-FOOT BELOW FINISH GRADE UNLESS NOTED OTHERWISE.
3. NOT ALL PIPES ARE SHOWN IN PIPE PROFILES. SEE YARD PIPING PLAN DRAWINGS.
4. CONTRACTOR TO FIELD VERIFY EXISTING PIPE LOCATIONS, ELEVATIONS, AND MATERIAL.
5. PROVIDE TRANSITION COUPLING AT LOCATIONS WHERE PIPE CONNECTS TO EXISTING PIPE AND MATERIALS ARE DIFFERENT.
6. REROUTE OR RELOCATE EXISTING PRESSURE PIPES TO ACCOMMODATE GRAVITY PIPE INSTALLATION UNLESS NOTED OTHERWISE.
7. PROVIDE AIR RELEASE VALVES AT HIGH POINTS OF PRESSURE PIPES.

| | |
|---|---|
| AREA 1 | AREA 2 |
| AREA 3 | AREA 4 |
| AREA 5 | AREA 6 |

FILE: 215786-03C101.dwg
DATE: Oct 07, 2015-5:18:12am, rsnider

HDR Engineering, Inc.

| ISSUE | DATE | DESCRIPTION |
|---|---|---|
| A | JUNE 2015 | ISSUED FOR BID |

| | |
|---|---|
| PROJECT MANAGER | C. OLSON |
| DESIGNED | M. PERINPANAYAGAM |
| DESIGNED | |
| CHECKED | C. OLSON |
| DRAWN | P. VAN MEURS |
| DATE | JUNE 30, 2015 |
| PROJECT NUMBER | 215786 |

REGISTERED PROFESSIONAL ENGINEER
CRAIG A. OLSON
NO. 39819
EXP. 12/31/15
CIVIL
STATE OF CALIFORNIA
06-30-15

CITY OF PINOLE CALIFORNIA 1903

PINOLE/HERCULES
WATER POLLUTION
CONTROL PLANT UPGRADE
CLIENT PN

CIVIL

YARD PIPING PLAN
AREA 1

0 1" 2"

| | |
|---|---|
| FILENAME | 215786-03C101 |
| SCALE | 1" = 10' |

SHEET 03C101

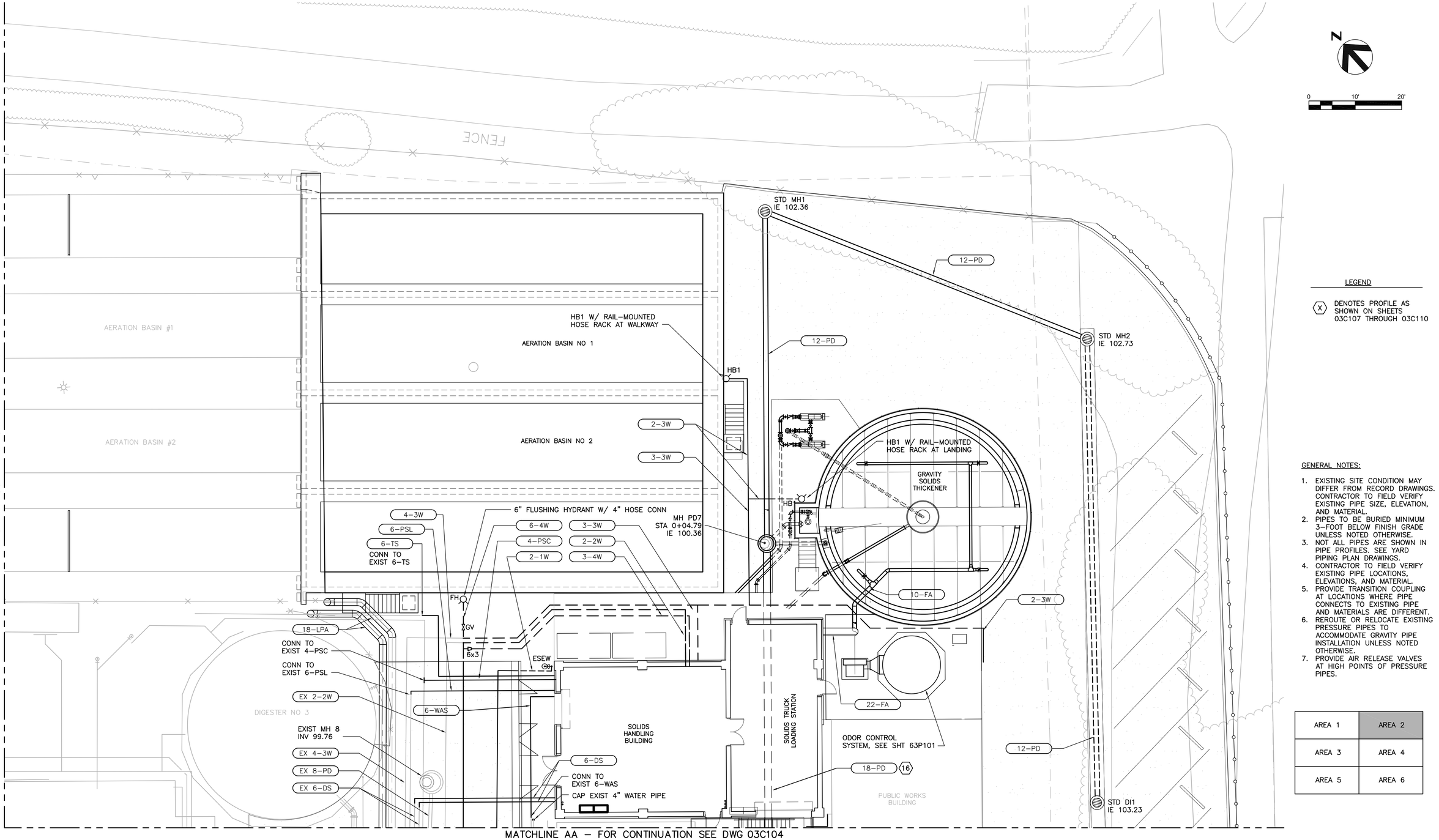


N

0 10' 20'

LEGEND

(X) DENOTES PROFILE AS SHOWN ON SHEETS 03C107 THROUGH 03C110

GENERAL NOTES:

1. EXISTING SITE CONDITION MAY DIFFER FROM RECORD DRAWINGS. CONTRACTOR TO FIELD VERIFY EXISTING PIPE SIZE, ELEVATION, AND MATERIAL.
2. PIPES TO BE BURIED MINIMUM 3–FOOT BELOW FINISH GRADE UNLESS NOTED OTHERWISE.
3. NOT ALL PIPES ARE SHOWN IN PIPE PROFILES. SEE YARD PIPING PLAN DRAWINGS.
4. CONTRACTOR TO FIELD VERIFY EXISTING PIPE LOCATIONS, ELEVATIONS, AND MATERIAL.
5. PROVIDE TRANSITION COUPLING AT LOCATIONS WHERE PIPE CONNECTS TO EXISTING PIPE AND MATERIALS ARE DIFFERENT.
6. REROUTE OR RELOCATE EXISTING PRESSURE PIPES TO ACCOMMODATE GRAVITY PIPE INSTALLATION UNLESS NOTED OTHERWISE.
7. PROVIDE AIR RELEASE VALVES AT HIGH POINTS OF PRESSURE PIPES.

| | |
|---|---|
| AREA 1 | AREA 2 |
| AREA 3 | AREA 4 |
| AREA 5 | AREA 6 |

FILE: 215786–03C102.dwg
DATE: Oct 07, 2015–5:19:04am, ranider

HDR Engineering, Inc.

| ISSUE | DATE | DESCRIPTION |
|---|---|---|
| A | JUNE 2015 | ISSUED FOR BID |

| | |
|---|---|
| PROJECT MANAGER | C. OLSON |
| | |
| DESIGNED | M. PERINPANAYAGAM |
| DESIGNED | |
| CHECKED | C. OLSON |
| DRAWN | P. VAN MEURS |
| DATE | JUNE 30, 2015 |
| | |
| PROJECT NUMBER | 215786 |

REGISTERED PROFESSIONAL ENGINEER CRAIG A. OLSON NO. 39819 EXP. 12/31/15 CIVIL STATE OF CALIFORNIA 06-30-15

CITY OF PINOLE CALIFORNIA 1903

PINOLE/HERCULES
WATER POLLUTION
CONTROL PLANT UPGRADE
CLIENT PN

**CIVIL**

**YARD PIPING PLAN AREA 2**

0 1" 2"

| | |
|---|---|
| FILENAME | 215786–03C102 |
| SCALE | 1" = 10' |

SHEET **03C102**

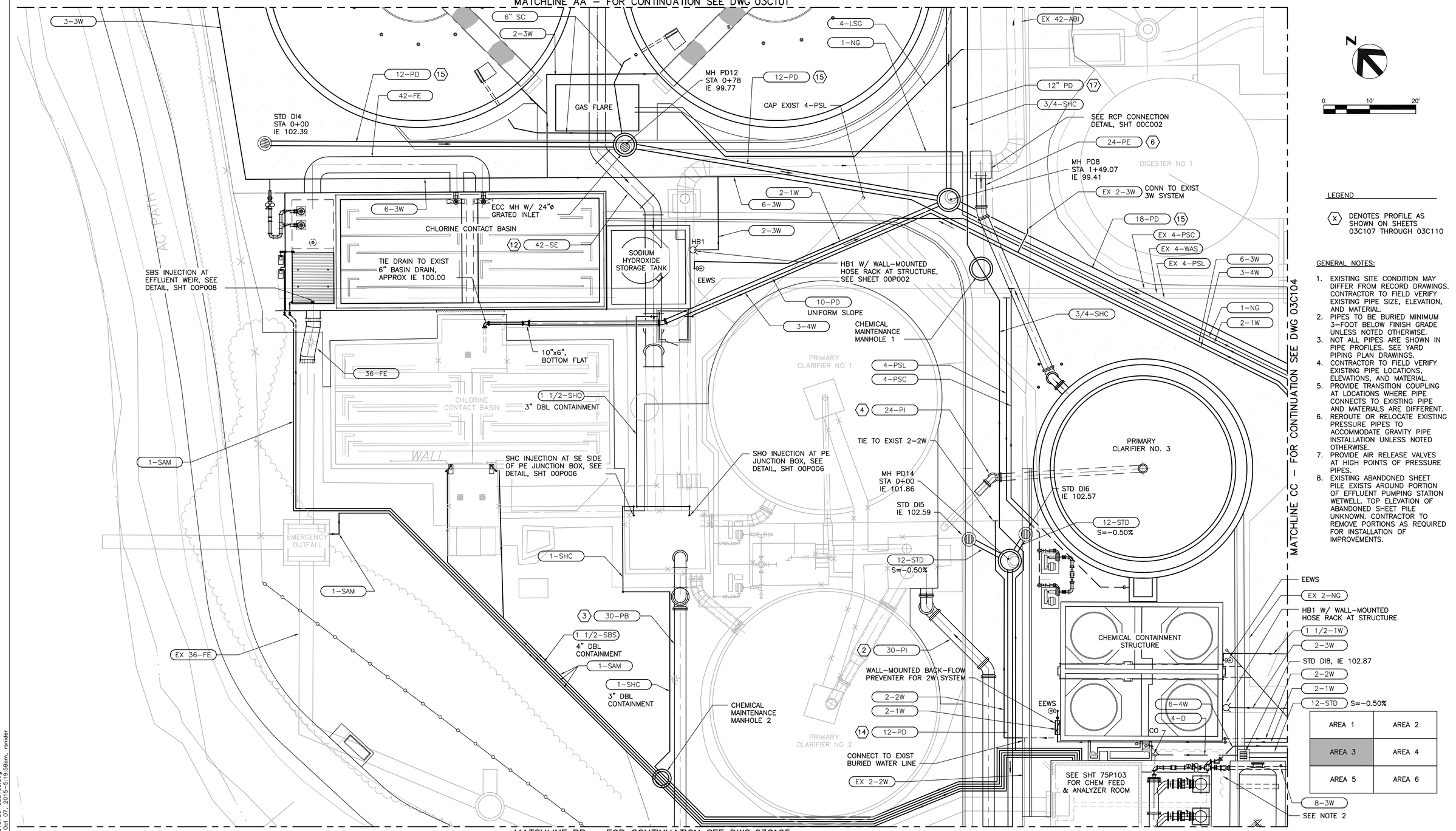


LEGEND

(X) DENOTES PROFILE AS SHOWN ON SHEETS 03C107 THROUGH 03C110

GENERAL NOTES:

1. EXISTING SITE CONDITION MAY DIFFER FROM RECORD DRAWINGS. CONTRACTOR TO FIELD VERIFY EXISTING PIPE SIZE, ELEVATION, AND MATERIAL.
2. PIPES TO BE BURIED MINIMUM 3–FOOT BELOW FINISH GRADE UNLESS NOTED OTHERWISE.
3. NOT ALL PIPES ARE SHOWN IN PIPE PROFILES. SEE YARD PIPING PLAN DRAWINGS.
4. CONTRACTOR TO FIELD VERIFY EXISTING PIPE LOCATIONS, ELEVATIONS, AND MATERIAL.
5. PROVIDE TRANSITION COUPLING AT LOCATIONS WHERE PIPE CONNECTS TO EXISTING PIPE AND MATERIALS ARE DIFFERENT.
6. REROUTE OR RELOCATE EXISTING PRESSURE PIPES TO ACCOMMODATE GRAVITY PIPE INSTALLATION UNLESS NOTED OTHERWISE.
7. PROVIDE AIR RELEASE VALVES AT HIGH POINTS OF PRESSURE PIPES.
8. EXISTING ABANDONED SHEET PILE EXISTS AROUND PORTION OF EFFLUENT PUMPING STATION WETWELL. TOP ELEVATION OF ABANDONED SHEET PILE UNKNOWN. CONTRACTOR TO REMOVE PORTIONS AS REQUIRED FOR INSTALLATION OF IMPROVEMENTS.

FILE: 215786–03C103.dwg
DATE: Oct 07, 2015–5:19:58am, ranider

HDR Engineering, Inc.

| ISSUE | DATE | DESCRIPTION |
|---|---|---|
| A | JUNE 2015 | ISSUED FOR BID |

| | |
|---|---|
| PROJECT MANAGER | C. OLSON |
| | |
| DESIGNED | M. PERINPANAYAGAM |
| DESIGNED | |
| CHECKED | C. OLSON |
| DRAWN | P. VAN MEURS |
| DATE | JUNE 30, 2015 |
| | |
| PROJECT NUMBER | 215786 |

REGISTERED PROFESSIONAL ENGINEER
CRAIG A. OLSON
NO. 39819
EXP. 12/31/15
CIVIL
STATE OF CALIFORNIA
06-30-15

CITY OF PINOLE CALIFORNIA 1903

PINOLE/HERCULES
WATER POLLUTION
CONTROL PLANT UPGRADE
CLIENT PN

**CIVIL**

**YARD PIPING PLAN**
**AREA 3**

0 1" 2"

| | |
|---|---|
| FILENAME | 215786–03C103 |
| SCALE | 1" = 10' |

SHEET **03C103**

MATCHLINE AA – FOR CONTINUATION SEE DWG 03C102

MATCHLINE CC – FOR CONTINUATION SEE DWG 03C103

MATCHLINE BB – FOR CONTINUATION SEE DWG 03C106

18–LPA

EX 4–WAS

EX 2–2W

6–4W

2–1W
CONNECT
TO EXIST

EX 2–1W

16 18–PD

18–PD 16

EX 1–1W

EX 4–SS

MH PD6
STA 1+17.94
IE 99.80

12–STD
S=–0.50%

EX 24–IS
HERCULES
SEWER

EX 2–1W

POLYMER STORAGE

PUBLIC WORKS
BUILDING

DIGESTER
BUILDING

DIGESTER #2

RELOCATED NG METER,
COORDINATE W/UTILITY

EX 6–3W

EX 8–PD

EX 12–D

2–NG

MH PD5
STA 1+94.67
IE 99.47

EX 4–WAS

EX 4–PSL

EX 4–PSC

EX MH 7
IE 99.47

EX 12–D

12–PD

24–IS 1

STD DI11
IE 102.94

12–STD
S=–0.50%

6–4W

18–PD 16

EX 2–1W

EX 8–3W

MH H2
STA 0+53.21
IE 100.12

STD DI10
IE 103.12

CONNECT TO
EXIST 6–SS/STD

CLEANOUT PER DETAIL,
SHEET 00C002

EX 6–STD

CONN TO EXIST SEWER
N 2196098.25
E 6044226.96
SEE NOTE 2

MH PD4
STA 2+38.91
IE 99.09

MC,
TYP

1–NG CONNECT TO EXIST 2" NG

2–1W CONNECT TO EXIST 2" 1W

6–3W CONNECT TO EXIST 8" 4W,
CONVERTED TO 3W

2–2W CONNECT TO EXIST 2" 2W

24–PD 15

EX 2–NG

EX 8–3W

6–4W

EX 18–LPA

18–LPA

30–IS 1
HERCULES
SEWER

EX 2–NG RELOCATE
AS NEEDED

BLOWER BLDG

MH H1
(FLOW MEASUREMENT)
STA 0+84.51
IE 100.06

FENCE

EX 3–1W

EX 2–1W

2" 1W BRANCH TO EEWS

2" 1W BRANCH TO EEWS & 2W BFP

12–STD
S=–0.50%

STD DI12
IE 102.89

30–IS 1

HERCULES
SEWER

STA 0+00
CONNECT TO EXIST
30" PINOLE SEWER
SEE NOTE 2

MH PD3
STA 3+19.24
IE 98.73

MH 3
STA 1+41.27
IE 97.45

MH P1
(FLOW MEASUREMENT)
STA 0+25.06
IE 97.54

EX 30–IS
PINOLE SEWER

CONTROL BLDG

CONNECTION TO EXIST
8"–4W, CONVERTED TO 3W

8x4
MC

24–PD 15

EX 3–1W

4–3W

1 36–IS

30–IS 5
PINOLE SEWER

EX 3–1W

N 2196025.08
E 6044163.83

N

0 10' 20'

LEGEND

X DENOTES PROFILE AS SHOWN ON SHEETS 03C107 THROUGH 03C110

GENERAL NOTES:

1. EXISTING SITE CONDITION MAY DIFFER FROM RECORD DRAWINGS. CONTRACTOR TO FIELD VERIFY EXISTING PIPE SIZE, ELEVATION, AND MATERIAL.
2. PIPES TO BE BURIED MINIMUM 3–FOOT BELOW FINISH GRADE UNLESS NOTED OTHERWISE.
3. NOT ALL PIPES ARE SHOWN IN PIPE PROFILES. SEE YARD PIPING PLAN DRAWINGS.
4. CONTRACTOR TO FIELD VERIFY EXISTING PIPE LOCATIONS, ELEVATIONS, AND MATERIAL.
5. PROVIDE TRANSITION COUPLING AT LOCATIONS WHERE PIPE CONNECTS TO EXISTING PIPE AND MATERIALS ARE DIFFERENT.
6. REROUTE OR RELOCATE EXISTING PRESSURE PIPES TO ACCOMMODATE GRAVITY PIPE INSTALLATION UNLESS NOTED OTHERWISE.
7. PROVIDE AIR RELEASE VALVES AT HIGH POINTS OF PRESSURE PIPES.
8. EXISTING PINOLE AND HERCULES INFLUENT SEWER PIPELINES ARE ASBESTOS CONCRETE PIPE (ACP). REFER TO SECTION 15072 FOR REMOVAL OF ACP.

| | |
|---|---|
| AREA 1 | AREA 2 |
| AREA 3 | AREA 4 |
| AREA 5 | AREA 6 |

FILE: 215786–03C104.dwg
DATE: Oct 07, 2015–5:20:49am, rsnider

HDR Engineering, Inc.

| ISSUE | DATE | DESCRIPTION |
|---|---|---|
| A | JUNE 2015 | ISSUED FOR BID |

| | |
|---|---|
| PROJECT MANAGER | C. OLSON |
| DESIGNED | M. PERINPANAYAGAM |
| DESIGNED | |
| CHECKED | C. OLSON |
| DRAWN | P. VAN MEURS |
| DATE | JUNE 30, 2015 |
| PROJECT NUMBER | 215786 |

REGISTERED PROFESSIONAL ENGINEER
CRAIG A. OLSON
NO. 39819
EXP. 12/31/15
CIVIL
STATE OF CALIFORNIA
06-30-15

CITY OF PINOLE CALIFORNIA 1903

PINOLE/HERCULES
WATER POLLUTION
CONTROL PLANT UPGRADE
CLIENT PN

CIVIL

YARD PIPING PLAN
AREA 4

0 1" 2"

| | |
|---|---|
| FILENAME | 215786–03C104 |
| SCALE | 1" = 10' |

SHEET
03C104

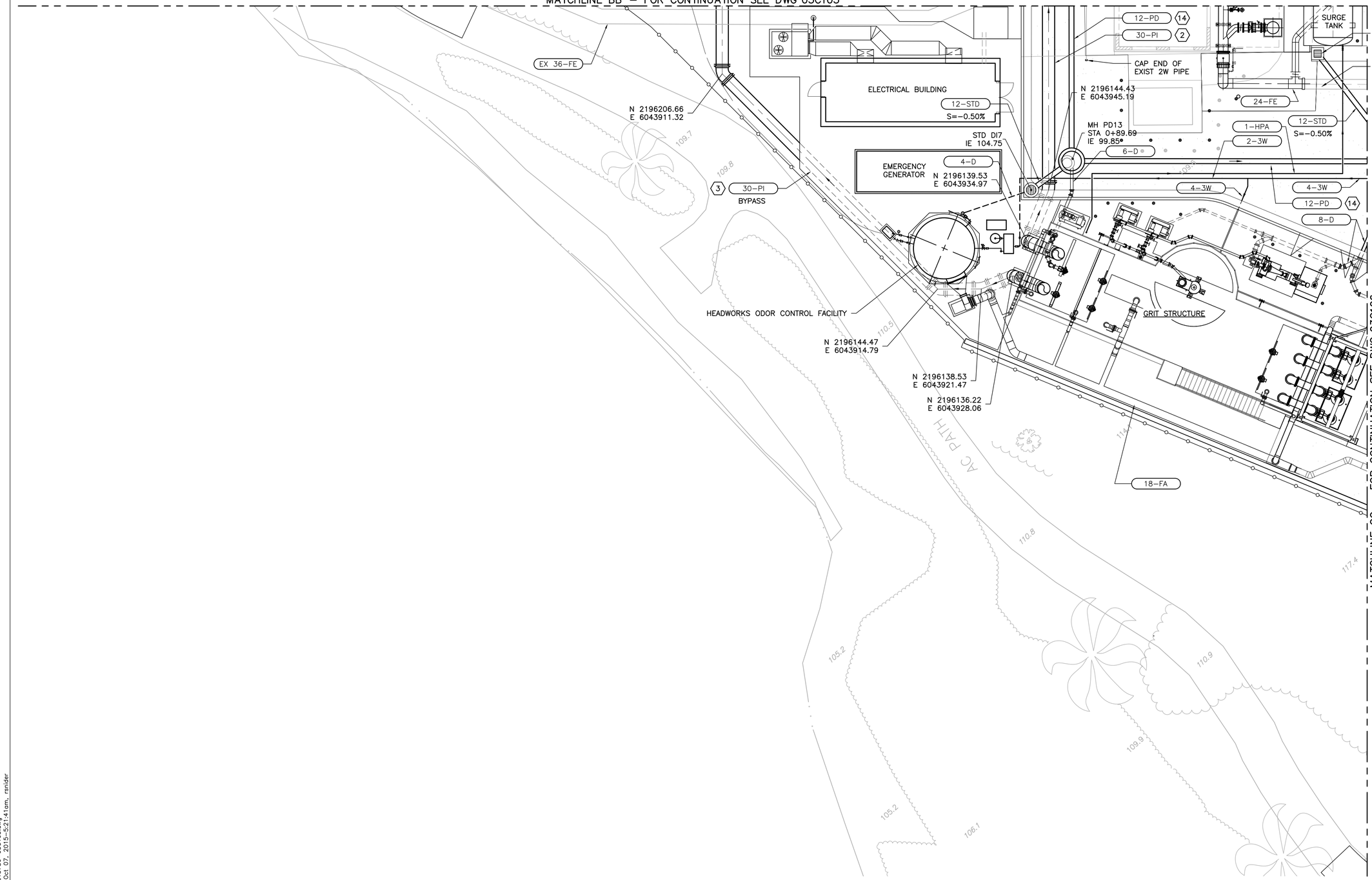


LEGEND

(X) DENOTES PROFILE AS SHOWN ON SHEETS 03C107 THROUGH 03C110

GENERAL NOTES:

1. EXISTING SITE CONDITION MAY DIFFER FROM RECORD DRAWINGS. CONTRACTOR TO FIELD VERIFY EXISTING PIPE SIZE, ELEVATION, AND MATERIAL.
2. PIPES TO BE BURIED MINIMUM 3-FOOT BELOW FINISH GRADE UNLESS NOTED OTHERWISE.
3. NOT ALL PIPES ARE SHOWN IN PIPE PROFILES. SEE YARD PIPING PLAN DRAWINGS.
4. CONTRACTOR TO FIELD VERIFY EXISTING PIPE LOCATIONS, ELEVATIONS, AND MATERIAL.
5. PROVIDE TRANSITION COUPLING AT LOCATIONS WHERE PIPE CONNECTS TO EXISTING PIPE AND MATERIALS ARE DIFFERENT.
6. REROUTE OR RELOCATE EXISTING PRESSURE PIPES TO ACCOMMODATE GRAVITY PIPE INSTALLATION UNLESS NOTED OTHERWISE.
7. PROVIDE AIR RELEASE VALVES AT HIGH POINTS OF PRESSURE PIPES.

| | |
|---|---|
| AREA 1 | AREA 2 |
| AREA 3 | AREA 4 |
| AREA 5 | AREA 6 |

FILE: 215786-03C105.dwg
DATE: Oct 07, 2015-5:21:41am, rsnider

HDR
HDR Engineering, Inc.

| ISSUE | DATE | DESCRIPTION |
|---|---|---|
| A | JUNE 2015 | ISSUED FOR BID |

| | |
|---|---|
| PROJECT MANAGER | C. OLSON |
| DESIGNED | M. PERINPANAYAGAM |
| DESIGNED | |
| CHECKED | C. OLSON |
| DRAWN | P. VAN MEURS |
| DATE | JUNE 30, 2015 |
| PROJECT NUMBER | 215786 |

REGISTERED PROFESSIONAL ENGINEER
CRAIG A. OLSON
NO. 39819
EXP. 12/31/15
CIVIL
STATE OF CALIFORNIA
06-30-15

CITY OF PINOLE CALIFORNIA 1903

PINOLE/HERCULES
WATER POLLUTION
CONTROL PLANT UPGRADE
CLIENT PN

**CIVIL**

**YARD PIPING PLAN**
**AREA 5**

0 1" 2"

| | |
|---|---|
| FILENAME | 215786-03C105 |
| SCALE | 1" = 10' |

SHEET
**03C105**

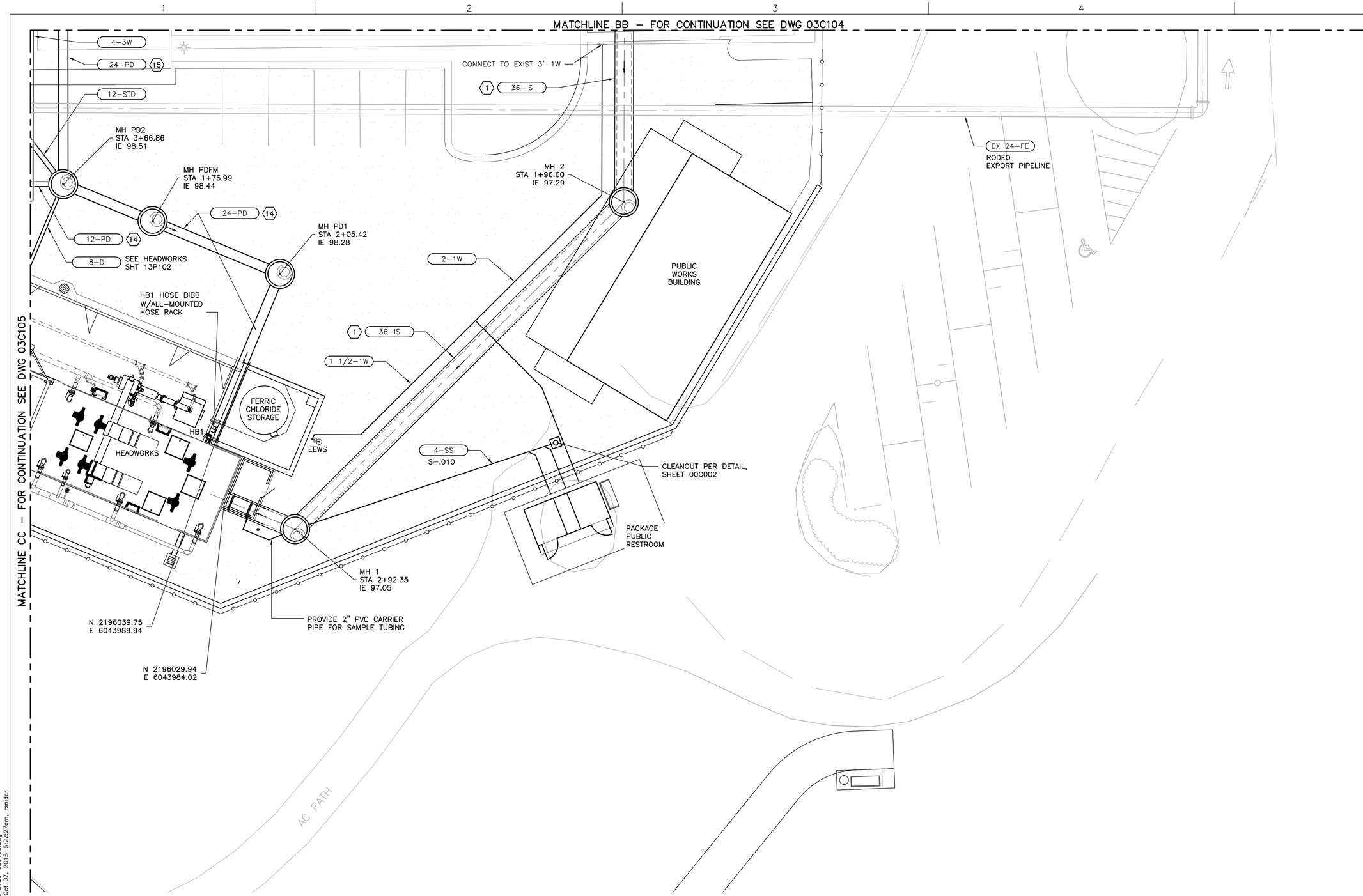


LEGEND

(X) DENOTES PROFILE AS SHOWN ON SHEETS 03C107 THROUGH 03C110

GENERAL NOTES:

1. EXISTING SITE CONDITION MAY DIFFER FROM RECORD DRAWINGS. CONTRACTOR TO FIELD VERIFY EXISTING PIPE SIZE, ELEVATION, AND MATERIAL.
2. PIPES TO BE BURIED MINIMUM 3-FOOT BELOW FINISH GRADE UNLESS NOTED OTHERWISE.
3. NOT ALL PIPES ARE SHOWN IN PIPE PROFILES. SEE YARD PIPING PLAN DRAWINGS.
4. CONTRACTOR TO FIELD VERIFY EXISTING PIPE LOCATIONS, ELEVATIONS, AND MATERIAL.
5. PROVIDE TRANSITION COUPLING AT LOCATIONS WHERE PIPE CONNECTS TO EXISTING PIPE AND MATERIALS ARE DIFFERENT.
6. REROUTE OR RELOCATE EXISTING PRESSURE PIPES TO ACCOMMODATE GRAVITY PIPE INSTALLATION UNLESS NOTED OTHERWISE.
7. PROVIDE AIR RELEASE VALVES AT HIGH POINTS OF PRESSURE PIPES.

| | |
|---|---|
| AREA 1 | AREA 2 |
| AREA 3 | AREA 4 |
| AREA 5 | AREA 6 |

FILE: 215786-03C106.dwg
DATE: Oct 07, 2015-5:22:27am, rsnider

HDR
HDR Engineering, Inc.

| ISSUE | DATE | DESCRIPTION |
|---|---|---|
| A | JUNE 2015 | ISSUED FOR BID |

| | |
|---|---|
| PROJECT MANAGER | C. OLSON |
| DESIGNED | M. PERINPANAYAGAM |
| DESIGNED | |
| CHECKED | C. OLSON |
| DRAWN | P. VAN MEURS |
| DATE | JUNE 30, 2015 |
| PROJECT NUMBER | 215786 |

REGISTERED PROFESSIONAL ENGINEER
CRAIG A. OLSON
NO. 39819
EXP. 12/31/15
CIVIL
STATE OF CALIFORNIA
06-30-15

CITY OF PINOLE CALIFORNIA 1903

PINOLE/HERCULES
WATER POLLUTION
CONTROL PLANT UPGRADE
CLIENT PN

**CIVIL**

**YARD PIPING PLAN**
**AREA 6**

0 1" 2"

| | |
|---|---|
| FILENAME | 215786-03C106 |
| SCALE | 1" = 10' |

SHEET
**03C106**

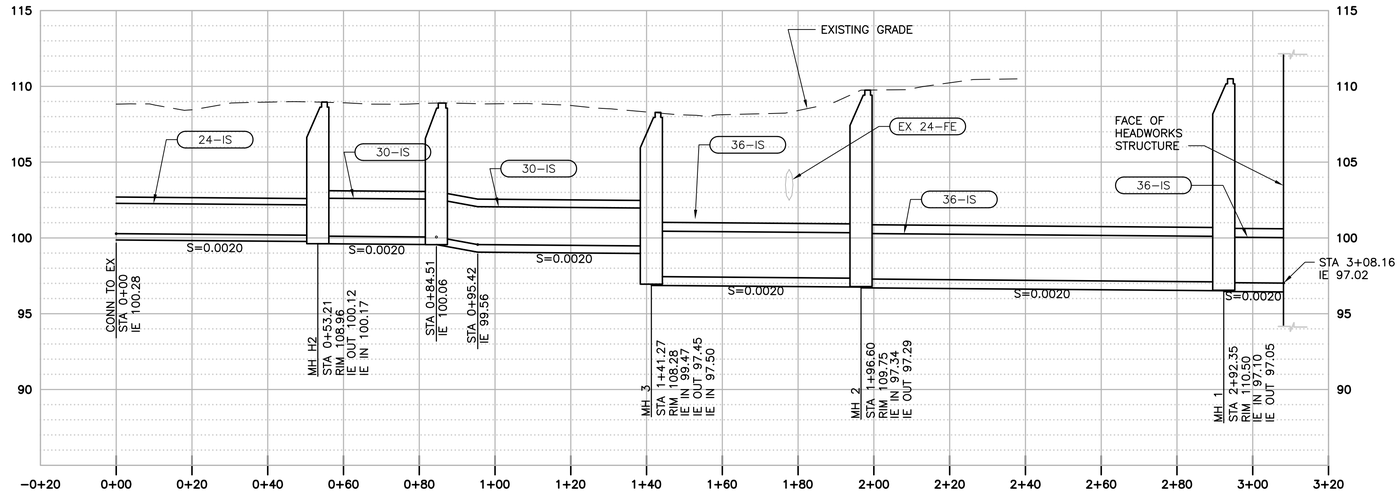


## PIPING PROFILE
## HERCULES 24"/30"/36" INFLUENT SEWER

1"=20' HORIZ; 1"=5' VERT

1

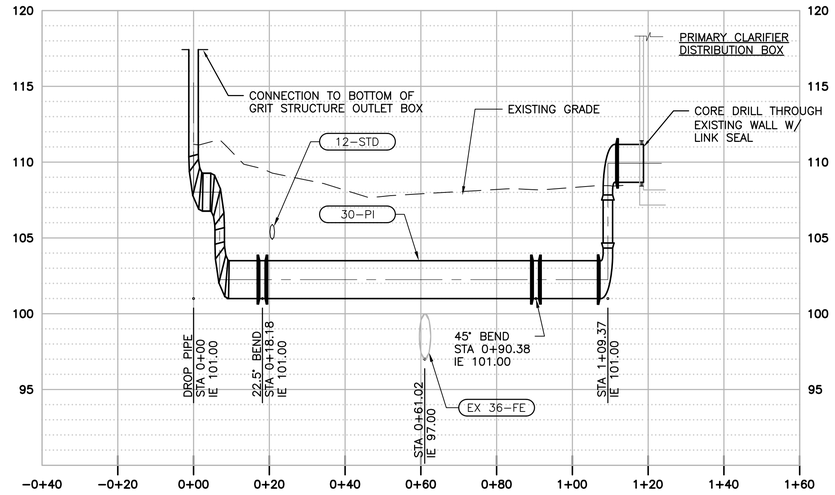


## PIPING PROFILE
## 30" PRIMARY CLARIFIER INFLUENT

1"=20' HORIZ; 1"=5' VERT

2

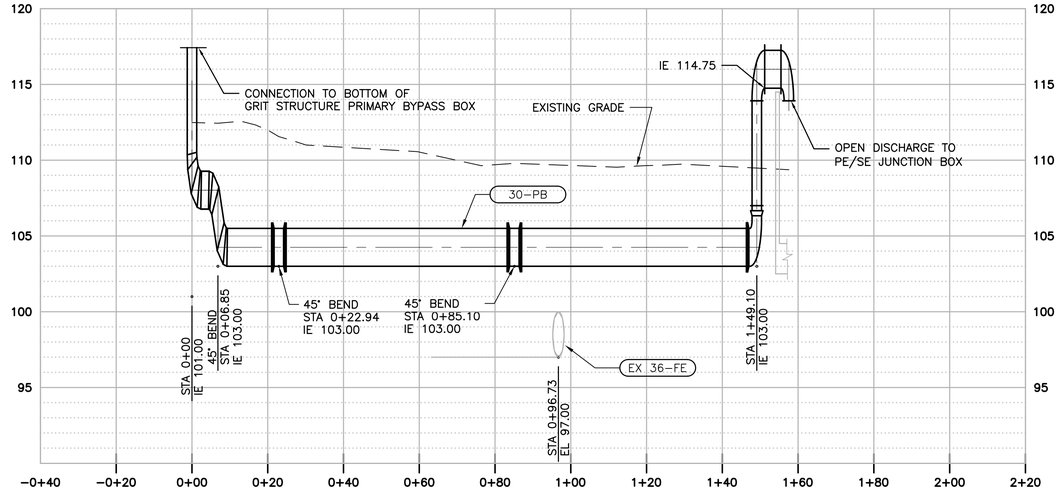


## PIPING PROFILE
## 30" PRIMARY CLARIFIER BYPASS

1"=20' HORIZ; 1"=5' VERT

3

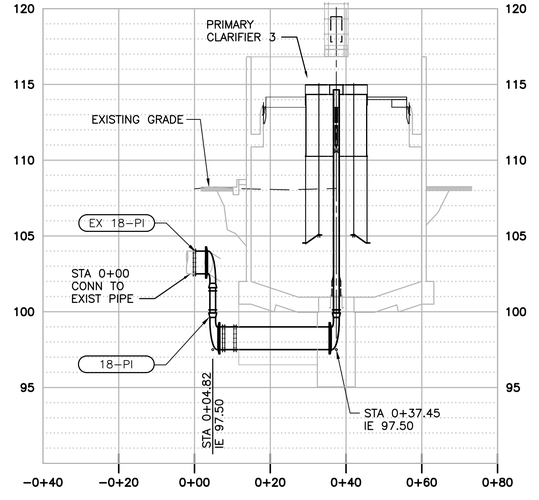


## PIPING PROFILE
## 18" PRIMARY CLARIFIER 3 INFLUENT

1"=20' HORIZ; 1"=5' VERT

4

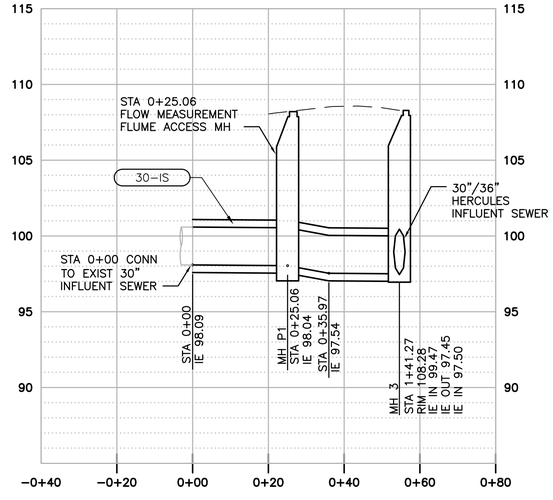


## PIPING PROFILE
## 30" PINOLE INFLUENT SEWER

1"=20' HORIZ; 1"=5' VERT

5

NOTE:
YARD PIPING PLANS DEPICT EXISTING AND PROPOSED GRAVITY PROCESS AND PLANT DRAIN PIPES. NOT ALL EXISTING AND PROPOSED PIPES AND UTILITIES ARE SHOWN ON YARD PIPING PROFILES. CONTRACTOR TO LOCATE ALL EXISTING PIPES AND UTILITIES PRIOR TO CONSTRUCTION.

FILE: 215786-03C107.dwg
DATE: Oct 07, 2015-5:22:48am, rsnider

HDR Engineering, Inc.

| ISSUE | DATE | DESCRIPTION |
|---|---|---|
| A | JUNE 2015 | ISSUED FOR BID |

| | |
|---|---|
| PROJECT MANAGER | C. OLSON |
| DESIGNED | M. PERINPANAYAGAM |
| DESIGNED | |
| CHECKED | C. OLSON |
| DRAWN | P. VAN MEURS |
| DATE | JUNE 30, 2015 |
| PROJECT NUMBER | 215786 |

REGISTERED PROFESSIONAL ENGINEER
CRAIG A. OLSON
NO. 39819
EXP. 12/31/15
CIVIL
STATE OF CALIFORNIA
06-30-15

CITY OF PINOLE CALIFORNIA 1903

PINOLE/HERCULES
WATER POLLUTION
CONTROL PLANT UPGRADE
CLIENT PN

**CIVIL**

**YARD PIPING - PROFILES 1**

0 1" 2"

| | |
|---|---|
| FILENAME | 215786-03C107 |
| SCALE | AS NOTED |

SHEET
**03C107**

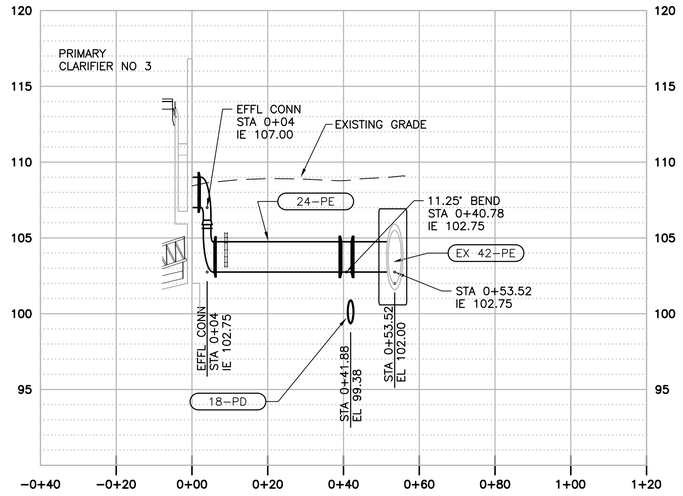


PIPING PROFILE
24" PRIMARY CLARIFIER 3 EFFLUENT (6)
1"=20' HORIZ; 1"=5' VERT

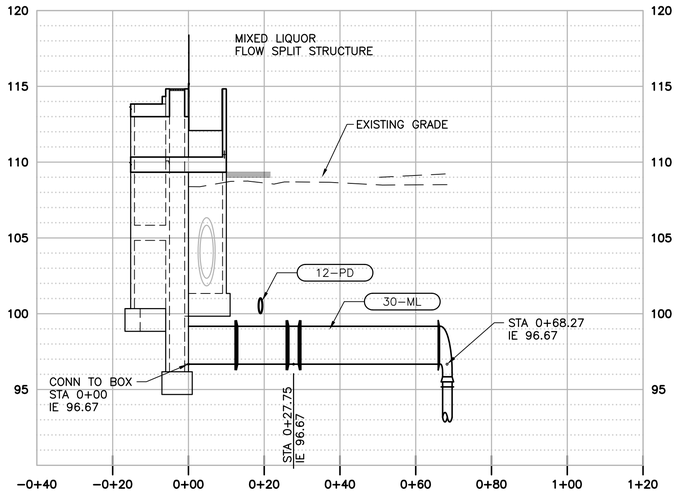


PIPING PROFILE
30" SECONDARY CLAR 1 INFLUENT (7)
1"=20' HORIZ; 1"=5' VERT

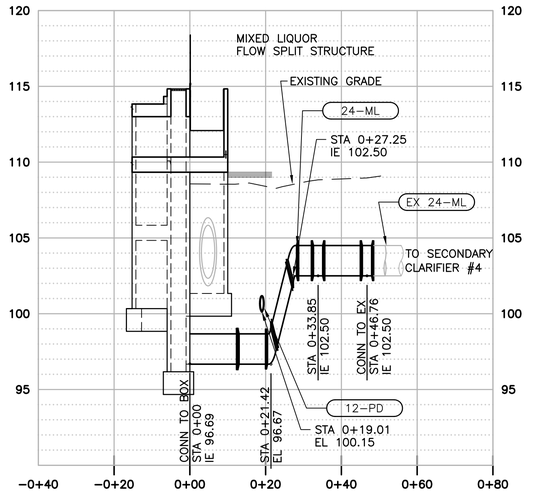


PIPING PROFILE
24" SECONDARY CLAR 4 INFLUENT (8)
1"=20' HORIZ; 1"=5' VERT

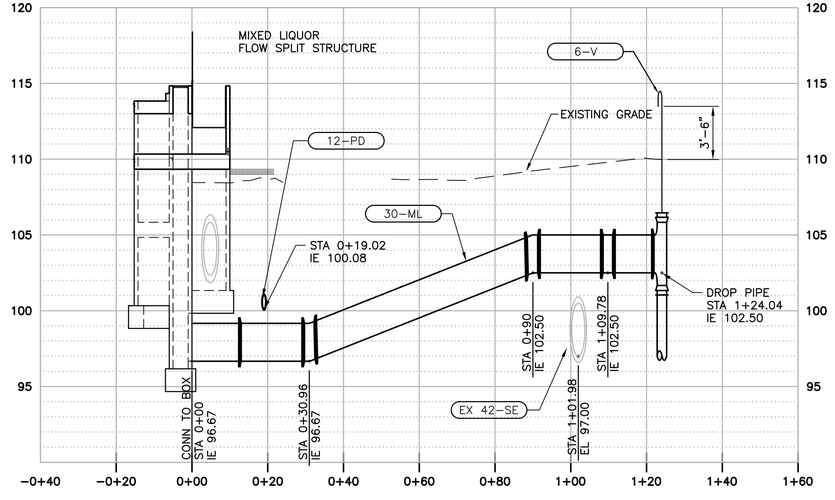


PIPING PROFILE
30" SECONDARY CLAR 2 INFLUENT (9)
1"=20' HORIZ; 1"=5' VERT

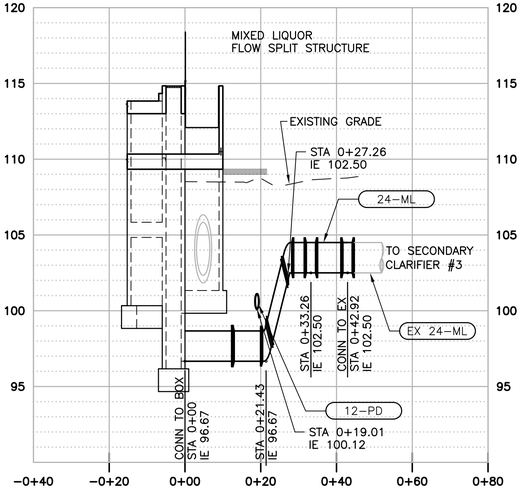


PIPING PROFILE
24" SECONDARY CLAR 3 INFLUENT (10)
1"=20' HORIZ; 1"=5' VERT

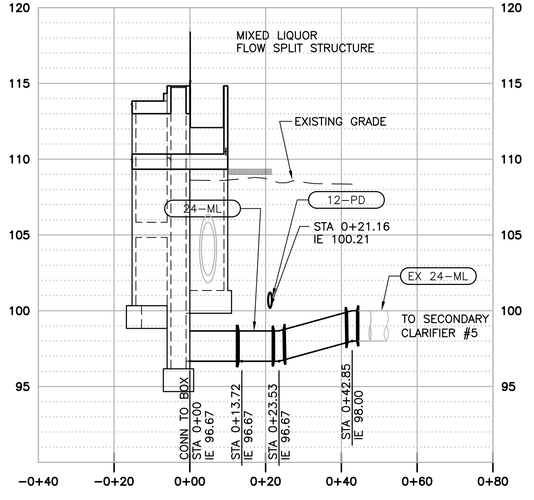


PIPING PROFILE
24" SECONDARY CLAR 5 INFLUENT (11)
1"=20' HORIZ; 1"=5' VERT

NOTE:
YARD PIPING PLANS DEPICT EXISTING AND PROPOSED GRAVITY PROCESS AND PLANT DRAIN PIPES. NOT ALL EXISTING AND PROPOSED PIPES AND UTILITIES ARE SHOWN ON YARD PIPING PROFILES. CONTRACTOR TO LOCATE ALL EXISTING PIPES AND UTILITIES PRIOR TO CONSTRUCTION.

FILE: 215786-03C108.dwg
DATE: Oct 07, 2015-5:23:12am, rsnider

HDR Engineering, Inc.

| ISSUE | DATE | DESCRIPTION |
|---|---|---|
| A | JUNE 2015 | ISSUED FOR BID |

| | |
|---|---|
| PROJECT MANAGER | C. OLSON |
| | |
| DESIGNED | M. PERINPANAYAGAM |
| DESIGNED | |
| CHECKED | C. OLSON |
| DRAWN | P. VAN MEURS |
| DATE | JUNE 30, 2015 |
| | |
| PROJECT NUMBER | 215786 |

REGISTERED PROFESSIONAL ENGINEER
CRAIG A. OLSON
NO. 39819
EXP. 12/31/15
CIVIL
STATE OF CALIFORNIA
06-30-15

CITY OF PINOLE CALIFORNIA 1903

PINOLE/HERCULES
WATER POLLUTION
CONTROL PLANT UPGRADE
CLIENT PN

**CIVIL**

**YARD PIPING - PROFILES 2**

0 1" 2"

| | |
|---|---|
| FILENAME | 215786-03C108 |
| SCALE | AS NOTED |

SHEET
**03C108**

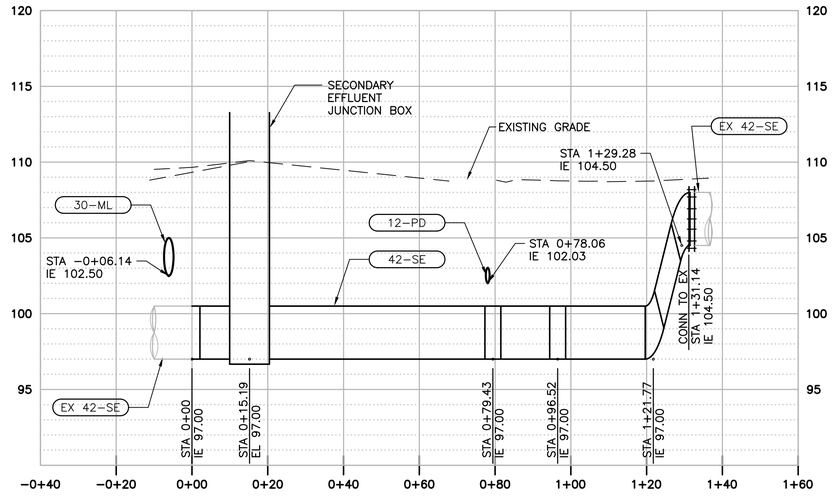


PIPING PROFILE
42" COMBINED SEC CLAR EFFLUENT (12)
1"=20' HORIZ; 1"=5' VERT

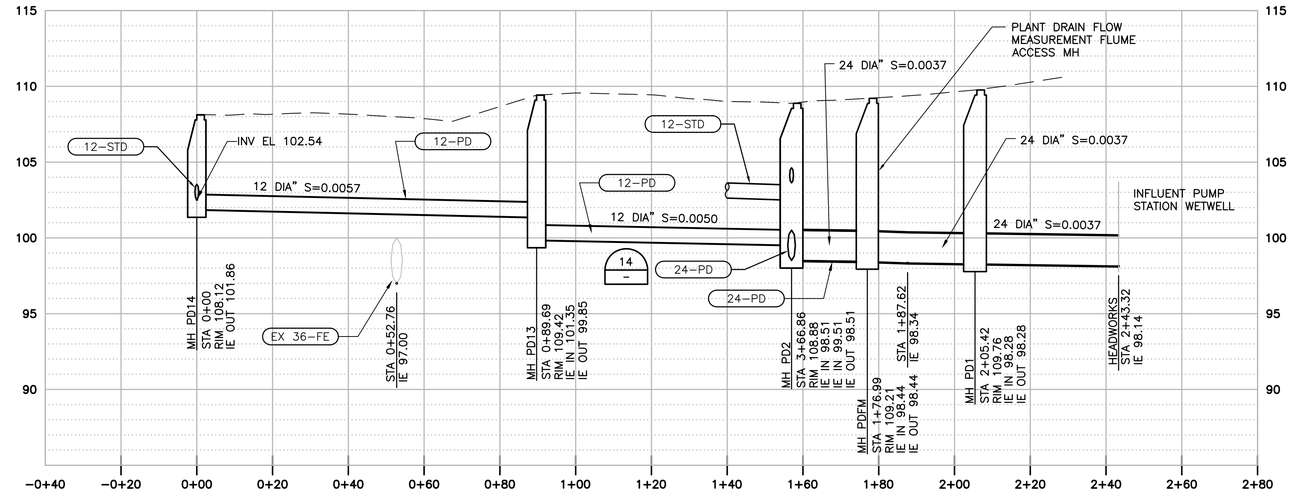


PIPING PROFILE
18"/24" PLANT DRAIN 01 (14)
1"=20' HORIZ; 1"=5' VERT

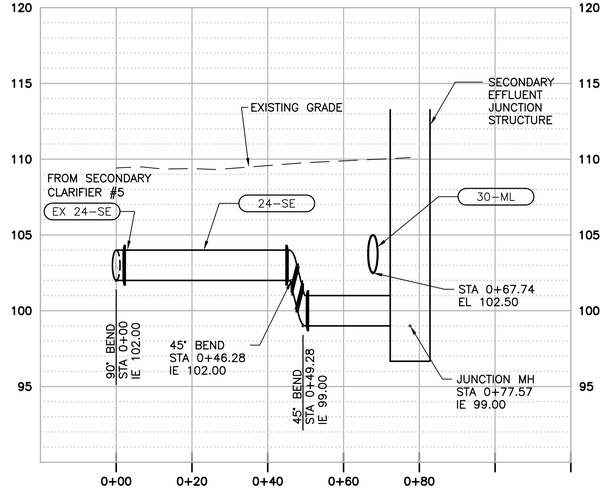


PIPING PROFILE
24" SECONDARY CLAR 5 EFFLUENT (13)
1"=20' HORIZ; 1"=5' VERT

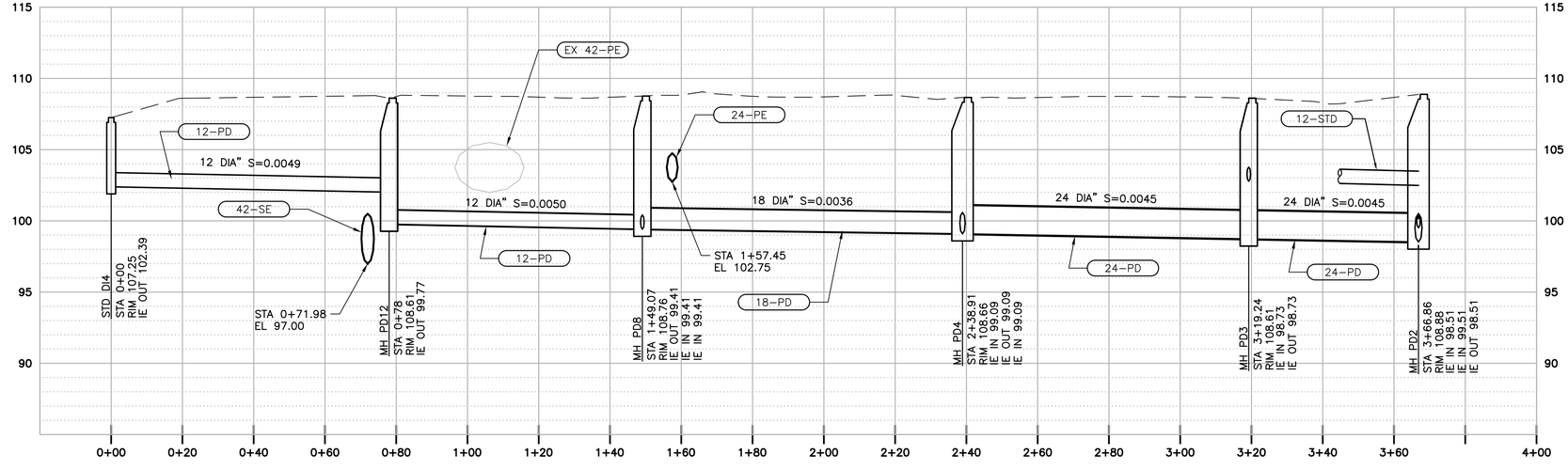


PIPING PROFILE
12"/21" PLANT DRAIN 02 (15)
1"=20' HORIZ; 1"=5' VERT

NOTE:
YARD PIPING PLANS DEPICT EXISTING AND PROPOSED GRAVITY PROCESS AND PLANT DRAIN PIPES. NOT ALL EXISTING AND PROPOSED PIPES AND UTILITIES ARE SHOWN ON YARD PIPING PROFILES. CONTRACTOR TO LOCATE ALL EXISTING PIPES AND UTILITIES PRIOR TO CONSTRUCTION.

FILE: 215786-03C109.dwg
DATE: Oct 07, 2015-5:23:38am rsnider

HDR Engineering, Inc.

| ISSUE | DATE | DESCRIPTION |
|---|---|---|
| A | JUNE 2015 | ISSUED FOR BID |

| | |
|---|---|
| PROJECT MANAGER | C. OLSON |
| DESIGNED | M. PERINPANAYAGAM |
| DESIGNED | |
| CHECKED | C. OLSON |
| DRAWN | P. VAN MEURS |
| DATE | JUNE 30, 2015 |
| PROJECT NUMBER | 215786 |

REGISTERED PROFESSIONAL ENGINEER
CRAIG A. OLSON
NO. 39819
EXP. 12/31/15
CIVIL
STATE OF CALIFORNIA
10-30-15

CITY OF PINOLE CALIFORNIA 1903

PINOLE/HERCULES
WATER POLLUTION
CONTROL PLANT UPGRADE
CLIENT PN

**CIVIL**

**YARD PIPING - PROFILES 3**

0 1" 2"

| | |
|---|---|
| FILENAME | 215786-03C109 |
| SCALE | AS NOTED |

SHEET
**03C109**

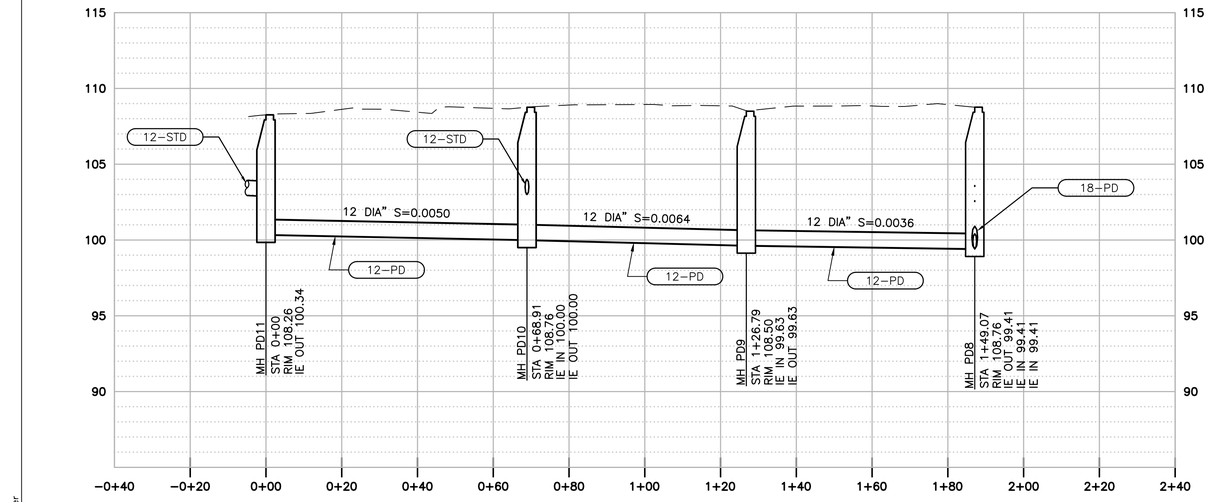


## PIPING PROFILE
## 18" PLANT DRAIN 03

16

1"=20' HORIZ; 1"=5' VERT




## PIPING PROFILE
## 12" PLANT DRAIN 04

17

1"=20' HORIZ; 1"=5' VERT

NOTE:
YARD PIPING PLANS DEPICT EXISTING AND PROPOSED GRAVITY PROCESS AND PLANT DRAIN PIPES. NOT ALL EXISTING AND PROPOSED PIPES AND UTILITIES ARE SHOWN ON YARD PIPING PROFILES. CONTRACTOR TO LOCATE ALL EXISTING PIPES AND UTILITIES PRIOR TO CONSTRUCTION.

FILE: 215786-03C110.dwg
DATE: Oct 07, 2015-5:23:55am, rsnider

HDR Engineering, Inc.

| ISSUE | DATE | DESCRIPTION |
|---|---|---|
| A | JUNE 2015 | ISSUED FOR BID |

| | |
|---|---|
| PROJECT MANAGER | C. OLSON |
| | |
| DESIGNED | M. PERINPANAYAGAM |
| DESIGNED | |
| CHECKED | C. OLSON |
| DRAWN | P. VAN MEURS |
| DATE | JUNE 30, 2015 |
| | |
| PROJECT NUMBER | 215786 |

REGISTERED PROFESSIONAL ENGINEER
CRAIG A. OLSON
NO. 39819
EXP. 12/31/15
CIVIL
STATE OF CALIFORNIA
10-30-15

CITY OF PINOLE CALIFORNIA 1903

PINOLE/HERCULES
WATER POLLUTION
CONTROL PLANT UPGRADE
CLIENT PN

**CIVIL**

**YARD PIPING - PROFILES 4**

0 1" 2"

| | |
|---|---|
| FILENAME | 215786-03C110 |
| SCALE | AS NOTED |

SHEET
**03C110**

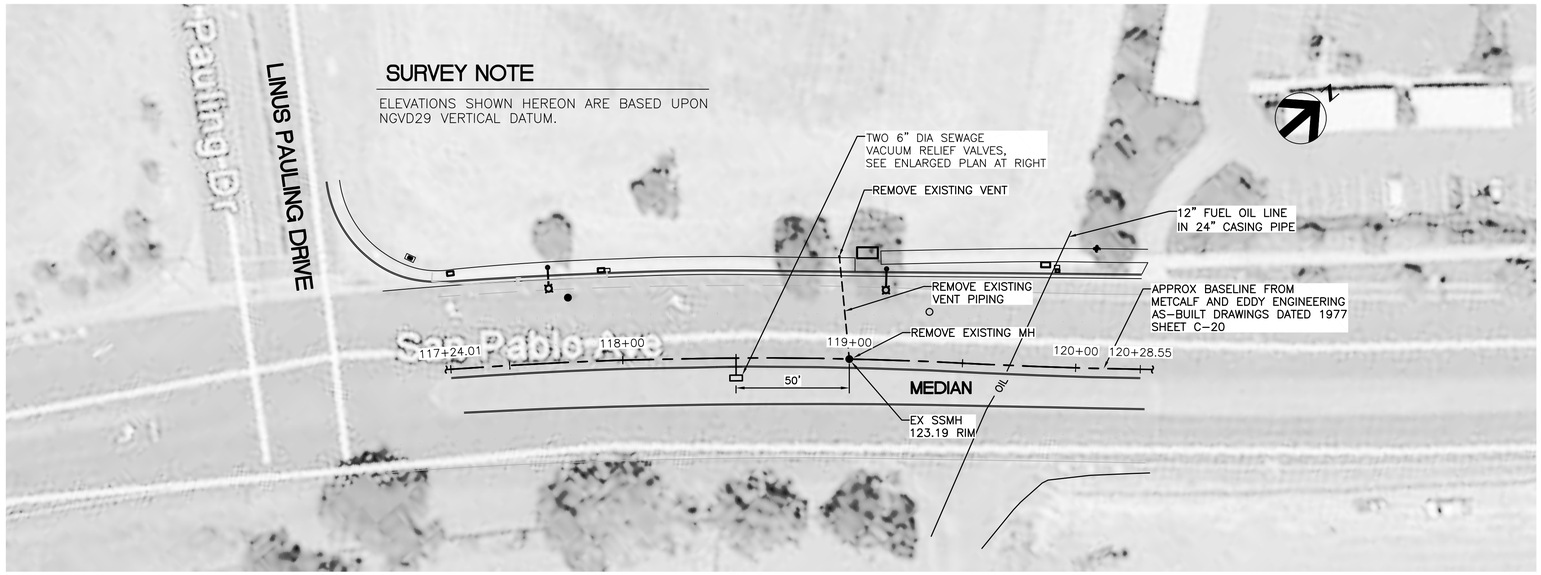


PLAN
SCALE: 1"=30'

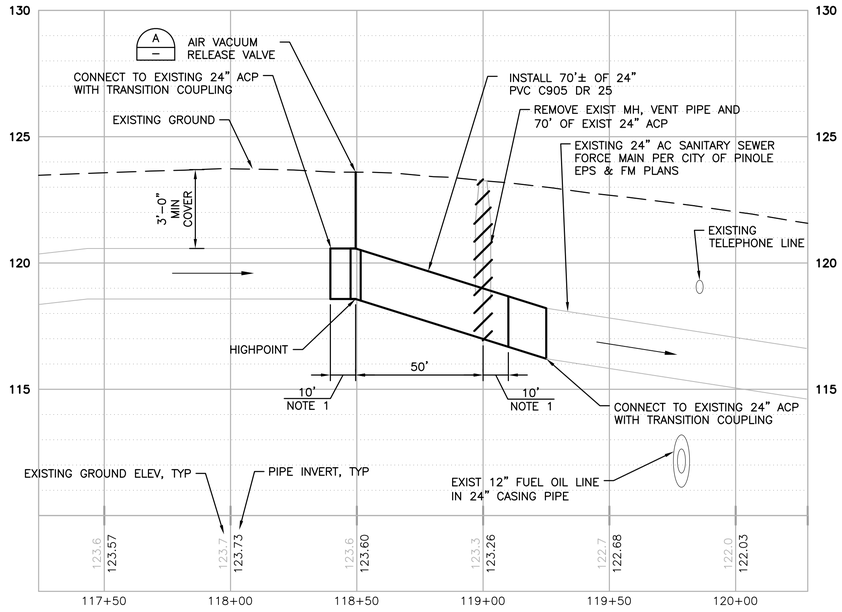


PROFILE
SCALE: HORIZ: 1"=30'
VERT: 1"=3'

NOTES:

1. DECONSTRUCT EXISTING 24" FE AC PIPE TO NEAREST JOINT AND INSTALL TRANSITION COUPLING.
2. CONTRACTOR IS RESPONSIBLE FOR PROVIDING SAFE WORKING CONDITIONS AROUND AC PIPE AND PROPER DISPOSAL OF REMOVED PIPE.

NOTES:

1. PAD DIMENSIONS SHALL ALLOW FOR ANCHORAGE OF ENCLOSURE, MINIMUM OF 6" CLEARANCE AROUND PERIMETER OF ENCLOSURE.
2. REFER TO PIPELINE PROFILE FOR GRADE AND INVERT ELEVATIONS.
3. MEDIAN IS STAMPED CONCRETE OF UNKNOWN THICKNESS. CONTRACTOR TO MATCH THICKNESS, PATTERN AND COLOR OF EXISTING CONCRETE WHEN REPLACING DAMAGED AND TRENCHED AREAS.

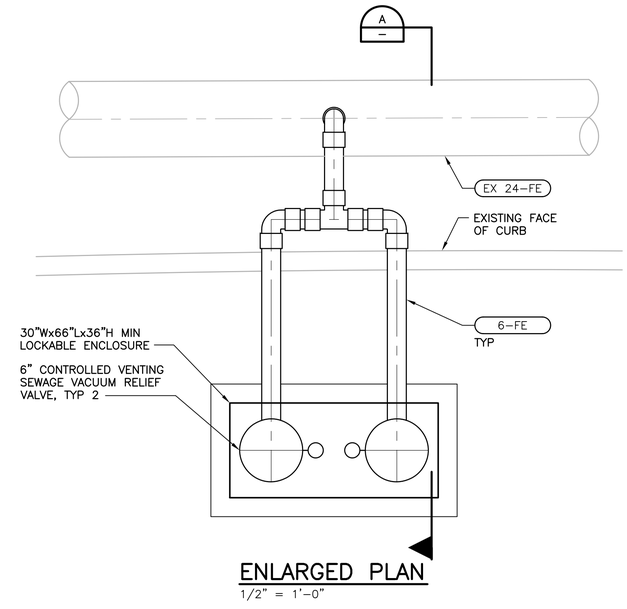


ENLARGED PLAN
1/2" = 1'-0"

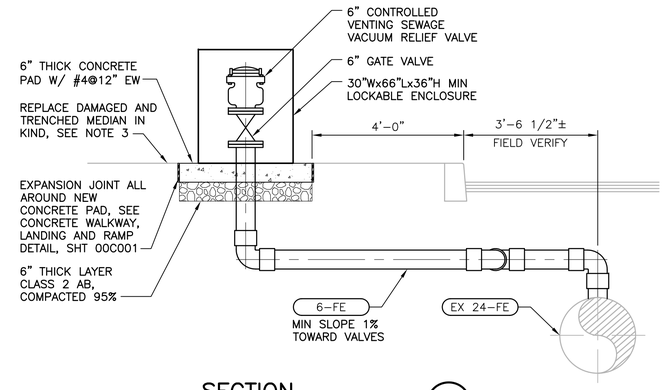


SECTION
1/2" = 1'-0"

| ISSUE | DATE | DESCRIPTION |
|---|---|---|
| A | JUNE 2015 | ISSUED FOR BID |

| | |
|---|---|
| PROJECT MANAGER | C. OLSON |
| DESIGNED | M. PERINPANAYAGAM |
| DESIGNED | |
| CHECKED | C. OLSON |
| DRAWN | A. COLLINS |
| DATE | JUNE 30, 2015 |
| PROJECT NUMBER | 215786 |

REGISTERED PROFESSIONAL ENGINEER
CRAIG A. OLSON
NO. 39819
EXP. 12/31/15
CIVIL
STATE OF CALIFORNIA
06-30-15

HDR Engineering, Inc.

CITY OF PINOLE CALIFORNIA 1903

PINOLE/HERCULES
WATER POLLUTION
CONTROL PLANT UPGRADE
CLIENT PN

**CIVIL**

**OUTFALL PIPELINE MODIFIFCATIONS**

0 1" 2"

| | |
|---|---|
| FILENAME | 06C101 |
| SCALE | AS NOTED |

SHEET
**06C101**

FILE: 06C101.dwg
DATE: Oct 07, 2015-5:12:28am, rsnider

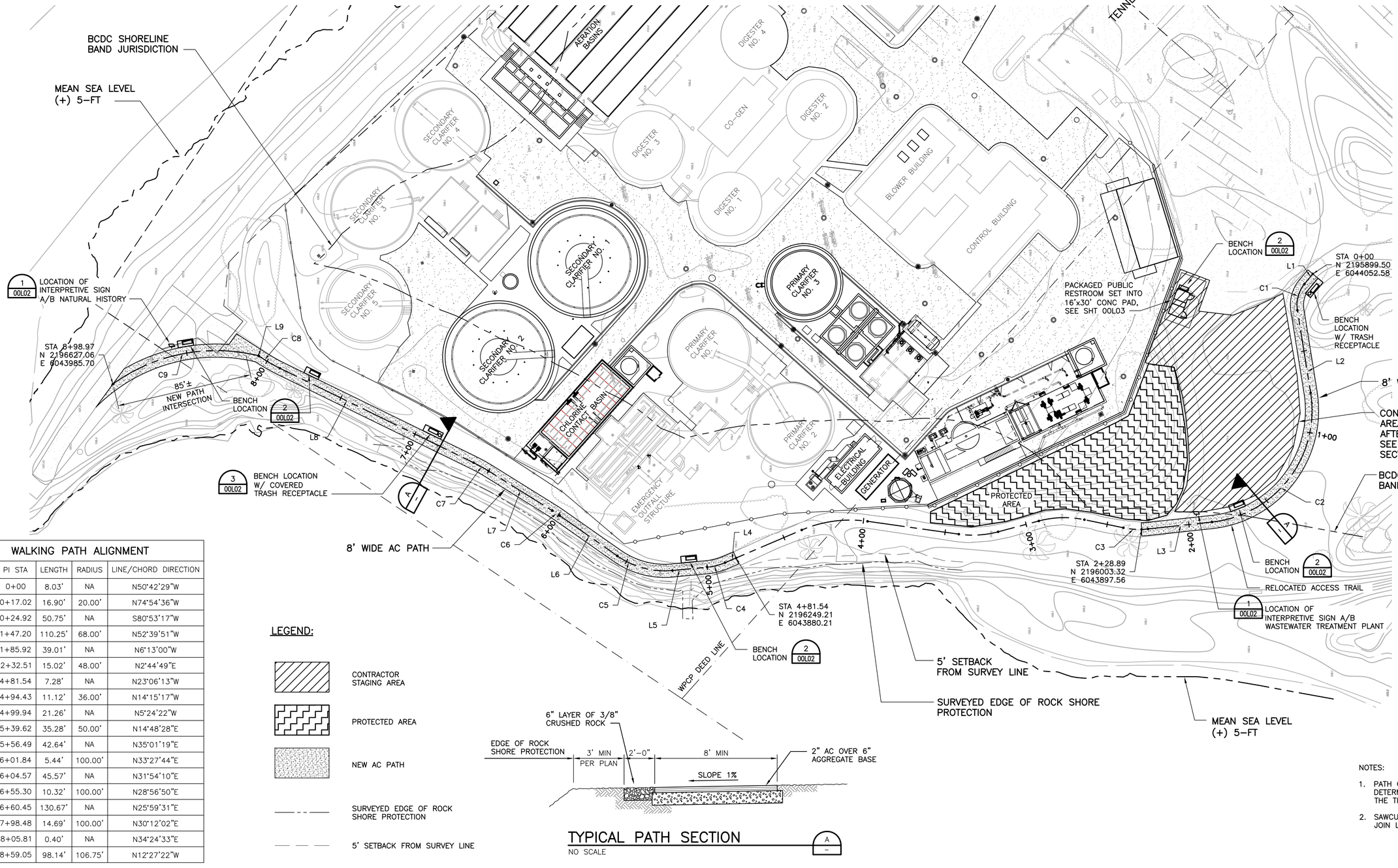


## WALKING PATH ALIGNMENT

| NUMBER | PI STA | LENGTH | RADIUS | LINE/CHORD DIRECTION |
|---|---|---|---|---|
| L1 | 0+00 | 8.03' | NA | N50°42'29"W |
| C1 | 0+17.02 | 16.90' | 20.00' | N74°54'36"W |
| L2 | 0+24.92 | 50.75' | NA | S80°53'17"W |
| C2 | 1+47.20 | 110.25' | 68.00' | N52°39'51"W |
| L3 | 1+85.92 | 39.01' | NA | N6°13'00"W |
| C3 | 2+32.51 | 15.02' | 48.00' | N2°44'49"E |
| L4 | 4+81.54 | 7.28' | NA | N23°06'13"W |
| C4 | 4+94.43 | 11.12' | 36.00' | N14°15'17"W |
| L5 | 4+99.94 | 21.26' | NA | N5°24'22"W |
| C5 | 5+39.62 | 35.28' | 50.00' | N14°48'28"E |
| L6 | 5+56.49 | 42.64' | NA | N35°01'19"E |
| C6 | 6+01.84 | 5.44' | 100.00' | N33°27'44"E |
| L7 | 6+04.57 | 45.57' | NA | N31°54'10"E |
| C7 | 6+55.30 | 10.32' | 100.00' | N28°56'50"E |
| L8 | 6+60.45 | 130.67' | NA | N25°59'31"E |
| C8 | 7+98.48 | 14.69' | 100.00' | N30°12'02"E |
| L9 | 8+05.81 | 0.40' | NA | N34°24'33"E |
| C9 | 8+59.05 | 98.14' | 106.75' | N12°27'22"W |

LEGEND:

- CONTRACTOR STAGING AREA
- PROTECTED AREA
- NEW AC PATH
- SURVEYED EDGE OF ROCK SHORE PROTECTION
- 5' SETBACK FROM SURVEY LINE




TYPICAL PATH SECTION (A)
NO SCALE

NOTES:

1. PATH GRADES TO BE DETERMINED IN THE FIELD AT THE TIME OF CONSTRUCTION.
2. SAWCUT EXISTING AC PATH AT JOIN LINES.

FILE: 215786_00L001.dwg
DATE: Oct 07, 2015 - 5:44:18am, rsnider

wra ENVIRONMENTAL CONSULTANTS

HDR Engineering, Inc.

| ISSUE | DATE | DESCRIPTION |
|---|---|---|
| A | JUNE 2015 | ISSUED FOR BID |

| | |
|---|---|
| PROJECT MANAGER | C. OLSON |
| DESIGNED | C. OLSON |
| DESIGNED | R. NATOLI |
| CHECKED | C. OLSON |
| DRAWN | P. VAN MEURS |
| DATE | JUNE 30, 2015 |
| PROJECT NUMBER | 215786 |

REGISTERED PROFESSIONAL ENGINEER — CRAIG A. OLSON — NO. 39819 — EXP. 12/31/15 — CIVIL — STATE OF CALIFORNIA — 06-30-15

CITY OF PINOLE CALIFORNIA 1903

PINOLE/HERCULES
WATER POLLUTION
CONTROL PLANT UPGRADE
CLIENT PN

**LANDSCAPE**

**SITE PLAN**
**WALKING PATH LAYOUT**

0 1" 2"

| | |
|---|---|
| FILENAME | 215786_00L001 |
| SCALE | NONE |

SHEET 00L001

Parc Vue® Backed Bench, 72in, Surface Mount, with End Arms
Product Drawing
Date: 5/19/2010
www.landscapeforms.com Ph: 800.621.2546

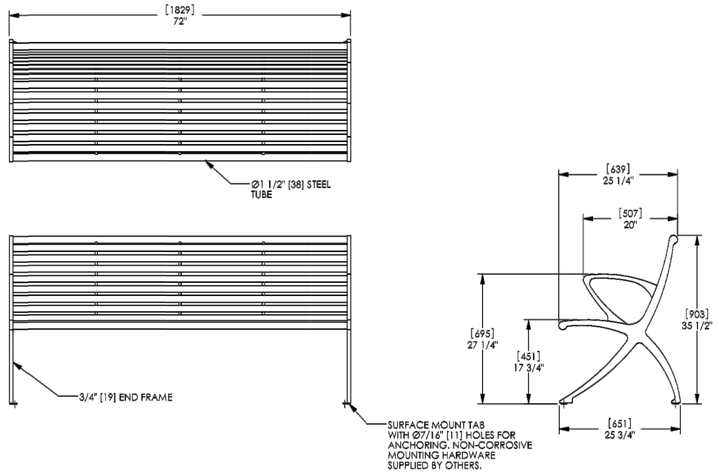


landscapeforms Drawing: PV844-04
Dimensions are in inches [mm]
U.S. Patent Nos.: D532,630; D534,021; D528,831

CONFIDENTIAL DRAWING INFORMATION CONTAINED HEREIN IS THE PROPERTY OF LANDSCAPE FORMS, INC. INTENDED USE IS LIMITED TO DESIGN PROFESSIONALS SPECIFYING LANDSCAPE FORMS, INC. PRODUCTS AND THEIR DIRECT CLIENTS. DRAWING IS NOT TO BE COPIED OR DISCLOSED TO OTHERS WITHOUT THE CONSENT OF LANDSCAPE FORMS, INC. © 2013 LANDSCAPE FORMS, INC. ALL RIGHTS RESERVED.

## 4 BENCH
NOT TO SCALE

Parc Vue® Litter Receptacle, Side Opening, With Urn-Shaped Liner
Product Drawing
Date: 7/20/2010
www.landscapeforms.com Ph: 800.621.2546

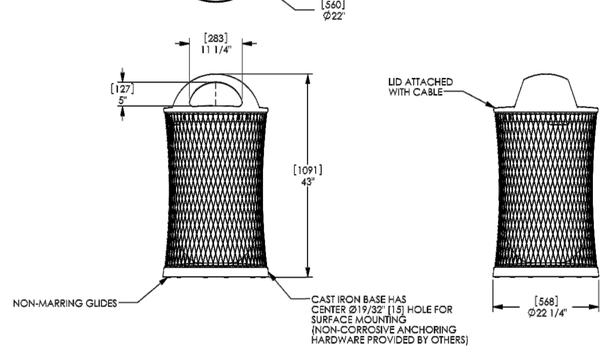


landscapeforms Drawing: PV842-01
Dimensions are in inches [mm]
U.S. Patent Nos. D550,421; D548,916

CONFIDENTIAL DRAWING INFORMATION CONTAINED HEREIN IS THE PROPERTY OF LANDSCAPE FORMS, INC. INTENDED USE IS LIMITED TO DESIGN PROFESSIONALS SPECIFYING LANDSCAPE FORMS, INC. PRODUCTS AND THEIR DIRECT CLIENTS. DRAWING IS NOT TO BE COPIED OR DISCLOSED TO OTHERS WITHOUT THE CONSENT OF LANDSCAPE FORMS, INC. © 2013 LANDSCAPE FORMS, INC. ALL RIGHTS RESERVED.

## 5 TRASH RECEPTACLE
NOT TO SCALE

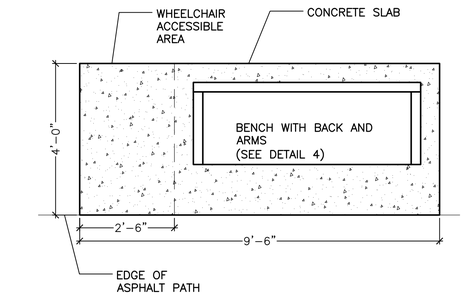


## 2 ACCESSIBLE BENCH INSTALLATION (TYP)
SCALE: 1" = 1'

NOTES:
1. CONCRETE FOOTINGS SHALL HAVE A SMOOTH AND LEVEL TOP SURFACE TO CREATE A LEVEL DISPLAY.
2. UNFINISHED METAL PARTS SHALL BE PAINTED WITH A PRIMER AND BLACK FINISH COAT.
3. CONCRETE FOOTING SIZE SHALL BE PER MANUFACTURER'S RECOMMENDATIONS.

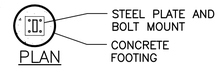


PLAN

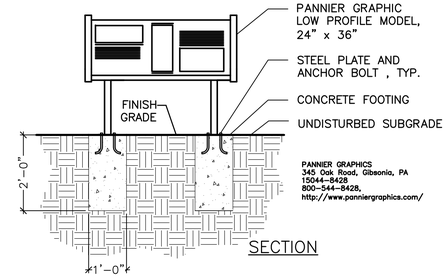


SECTION

## 1 INTERPRETIVE PANEL INSTALLATION
NOT TO SCALE

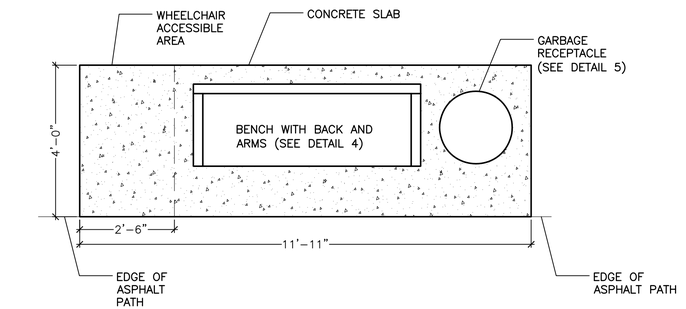


## 3 ACCESSIBLE BENCH AND GARBAGE RECEPTACLE INSTALLATION (TYP)
SCALE: 1/2" = 1'

FILE: 215786-00L002.dwg
DATE: Oct 07, 2015-5:24:44am, ranider

wra ENVIRONMENTAL CONSULTANTS

HDR HDR Engineering, Inc.

| ISSUE | DATE | DESCRIPTION |
|---|---|---|
| | | |
| | | |
| | | |
| | | |
| | | |
| | | |
| A | JUNE-2015 | ISSUED FOR BID |

| | |
|---|---|
| PROJECT MANAGER | C. OLSON |
| | |
| DESIGNED | J. SEMION |
| DESIGNED | C. SHERRADEN |
| CHECKED | C. OLSON |
| DRAWN | P. VAN MEURS |
| DATE | JUNE 30, 2015 |
| | |
| PROJECT NUMBER | 215786 |

REGISTERED PROFESSIONAL ENGINEER
CRAIG A. OLSON
NO. 39819
EXP. 12/31/15
CIVIL
STATE OF CALIFORNIA
06-30-15

CITY OF PINOLE CALIFORNIA 1903

PINOLE/HERCULES
WATER POLLUTION
CONTROL PLANT UPGRADE
CLIENT PN

**LANDSCAPE**

**MISCELLANEOUS DETAILS 1**

0 1" 2"

| | |
|---|---|
| FILENAME | 215786-00L002 |
| SCALE | AS NOTED |

SHEET
**00L002**

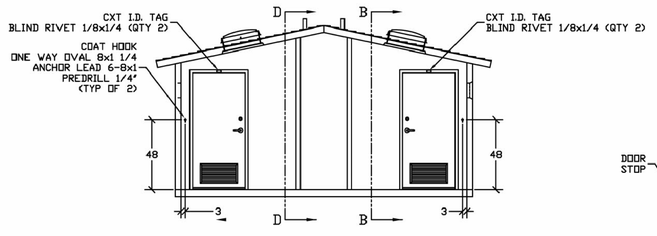


SECTION A – A

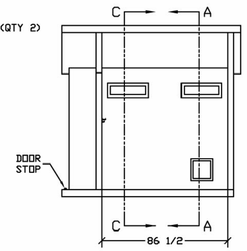


SECTION B – B

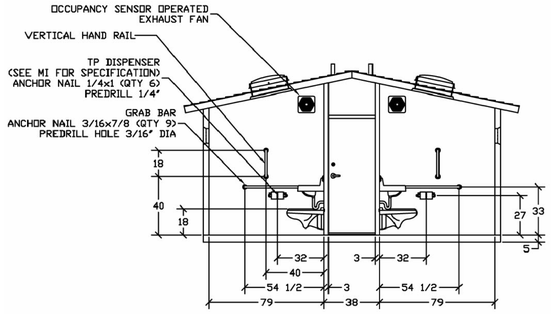


SECTION C – C

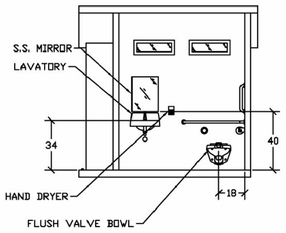


SECTION D – D

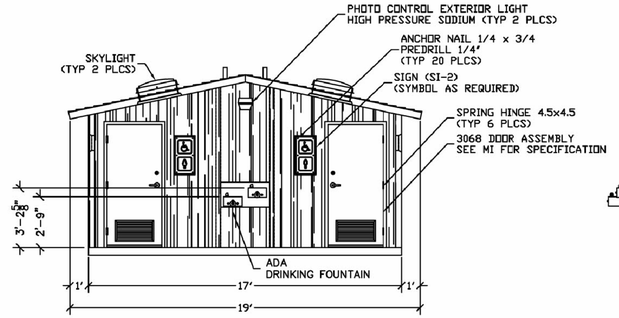


FRONT ELEVATION

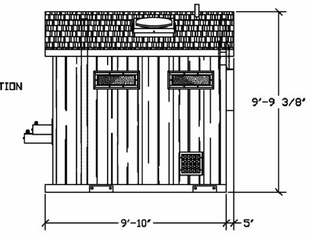


RIGHT SIDE ELEVATION

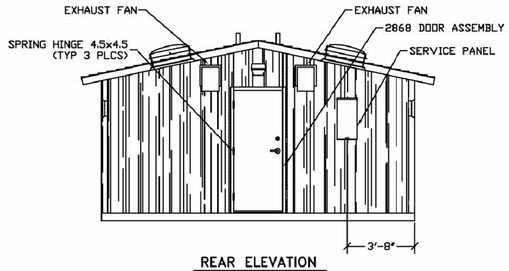


REAR ELEVATION

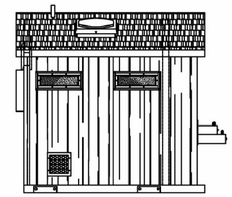

LEFT SIDE ELEVATION

NOTES:

1. FACILITY TO BE A PACKAGE ADA–COMPLIANT, TWO–OCCUPANT RESTROOM WITH SERVICE CHASE. STANDARD FEATURES TO INCLUDE SIMULATED BARNWOOD TEXTURE WALLS, SIMULATED CEDAR SHAKE TEXTURED ROOF, INTERIOR AND EXTERIOR LIGHTS, OFF LOADED AND SET UP AT SITE INCLUDING ALL UTILITY CONNECTIONS.
2. CONSTRUCTION TO MEET 150 MPH WIND LOAD (WIND EXPOSURE C), 250 POUNDS PER SQUARE FOOT SNOW LOAD, 400 POUNDS PER SQUARE FOOT FLOOR LOAD, AND WITHSTAND THE EFFECTS OF A GROUP 1 SEISMIC DESIGN CATEGORY E EARTHQUAKE.
3. PRE–PLUMBED AND PRE–WIRED BUILDINGS TO MEET ALL REQUIREMENTS OF THE CURRENT CALIFORNIA BUILDING CODE.
4. REQUIRED ITEMS INCLUDE TWO–TONE COLOR SCHEME TO BE SELECTED BY OWNER, STAINLESS STEEL PLUMBING FIXTURES, ELECTRIC HAND DRYERS, EXTERIOR–MOUNTED ADA DRINKING FOUNTAIN, MARINE PACKAGE FOR EXTRA CORROSION RESISTANCE, AND FIBERGLASS ENTRY AND CHASE DOORS AND FRAMES.
5. ADDITIONAL ITEMS AS SHOWN IN PLAN, ELEVATIONS AND SECTIONS ON THIS DRAWING.
6. REQUIREMENTS INCLUDE FINAL UTILITY CONNECTIONS. CONTRACTOR TO COORDINATE REQUIRED UTILITIES.
7. PACKAGE RESTROOM TO BE CXT CONCRETE BUILDINGS, MODEL CORTEZ FLUSH RESTROOM OR APPROVED EQUAL.
8. CONTRACTOR TO PROVIDE 2'–0" THICK LAYER OF COMPACTED (95%) CLASS 2 AGGREGATE BASE UNDER BUILDING FOR FOUNDATION. EXTEND AGGREGATE BASE 2'–0" (MINIMUM) BEYOND BUILDING PERIMETER.

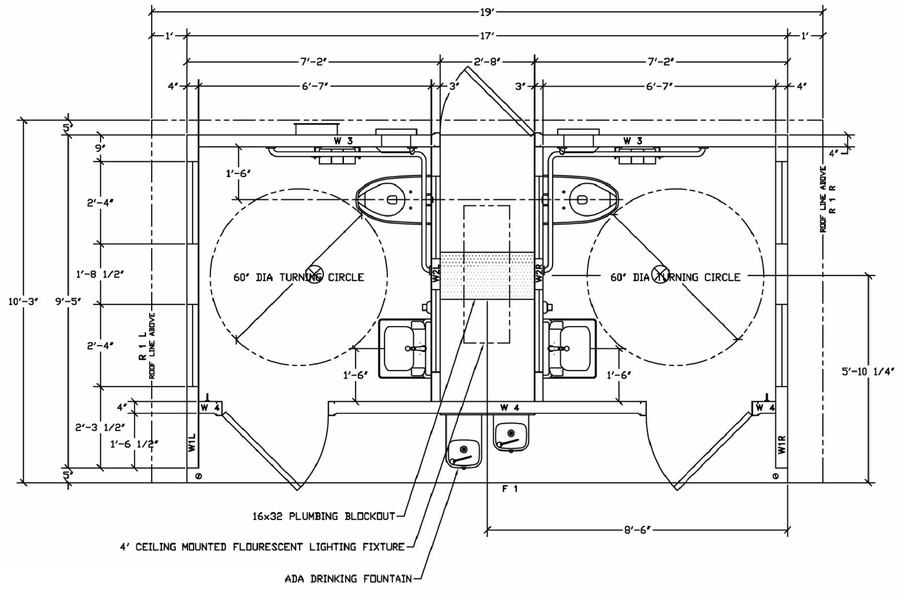


6 PACKAGED RESTROOM
NOT TO SCALE

FILE: 215786–00L003.dwg
DATE: Oct 07, 2015–5:24:51am, rsnider

wra ENVIRONMENTAL CONSULTANTS

HDR Engineering, Inc.

| ISSUE | DATE | DESCRIPTION |
|---|---|---|
| A | JUNE–2015 | ISSUED FOR BID |

| | |
|---|---|
| PROJECT MANAGER | C. OLSON |
| DESIGNED | C. OLSON |
| DESIGNED | R. NATOLI |
| CHECKED | C. OLSON |
| DRAWN | P. VAN MEURS |
| DATE | JUNE 30, 2015 |
| PROJECT NUMBER | 215786 |

REGISTERED PROFESSIONAL ENGINEER
CRAIG A. OLSON
NO. 39819
EXP. 12/31/15
CIVIL
STATE OF CALIFORNIA
06-30-15

CITY OF PINOLE CALIFORNIA 1903

PINOLE/HERCULES
WATER POLLUTION
CONTROL PLANT UPGRADE
CLIENT PN

**LANDSCAPE**

**MISCELLANEOUS DETAILS 2**

0 1" 2"

| FILENAME | 215786–00L003 |
|---|---|
| SCALE | NONE |

SHEET **00L003**

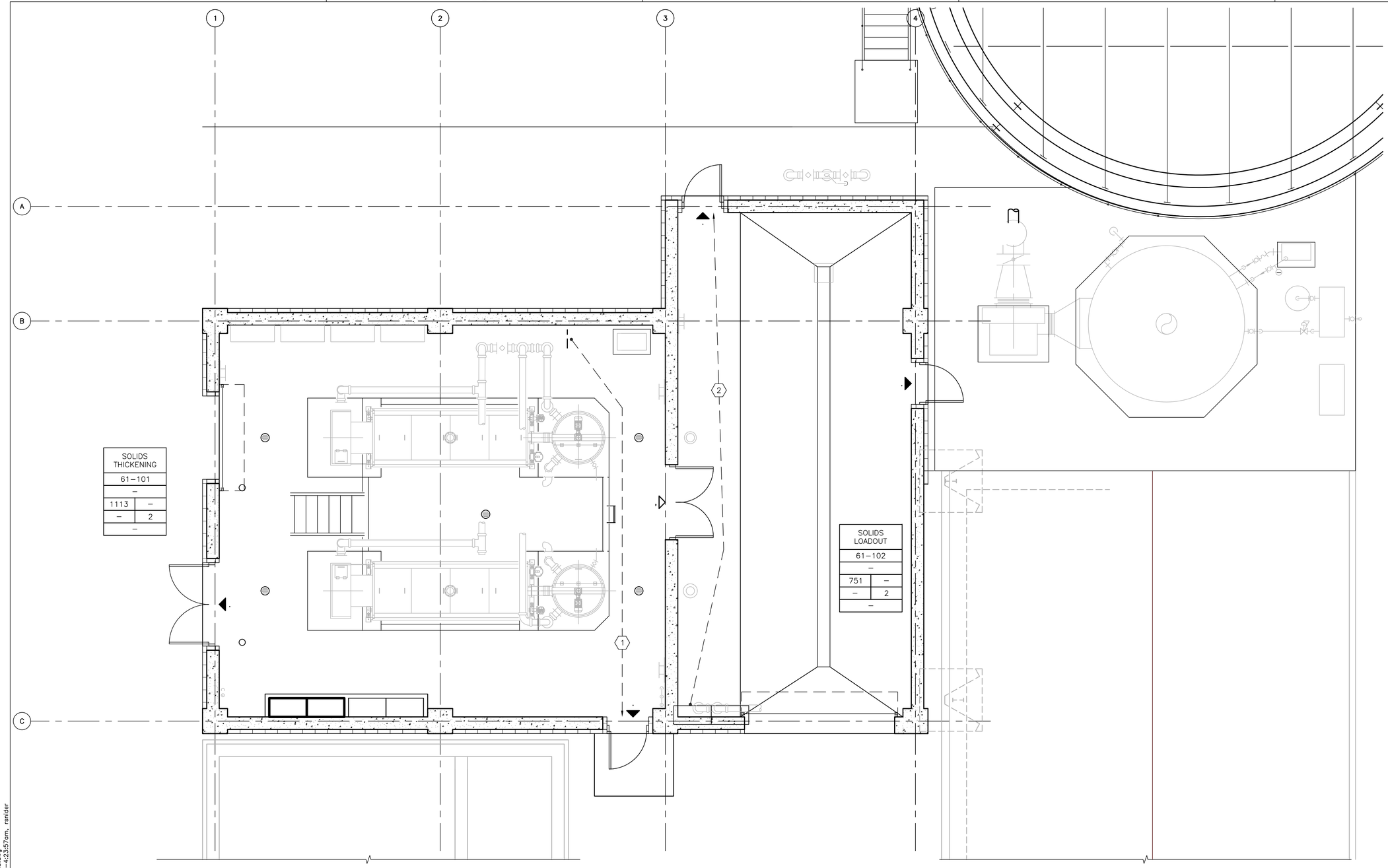


SEE SHEET 66A101 FOR CONTINUATION

## FLOOR PLAN

1/4" = 1'–0"

KEY NOTES:

1. PATH OF TRAVEL = 32 FEET.
2. PATH OF TRAVEL = 40 FEET.

FILE: 215786–00A103.dwg
DATE: Oct 07, 2015–4:23:57am, rsnider

HDR Engineering, Inc.

| ISSUE | DATE | DESCRIPTION |
|---|---|---|
| A | JUNE 2015 | ISSUED FOR BID |

| | |
|---|---|
| PROJECT MANAGER | C. OLSON |
| DESIGNED | M. EVERETT |
| DESIGNED | |
| CHECKED | |
| DRAWN | M. MENDOZA |
| DATE | JUNE 30, 2015 |
| PROJECT NUMBER | 215786 |

REGISTERED PROFESSIONAL ENGINEER CRAIG A. OLSON NO. 39819 EXP. 12/31/15 CIVIL STATE OF CALIFORNIA 06-30-15

CITY OF PINOLE CALIFORNIA 1903

PINOLE/HERCULES
WATER POLLUTION
CONTROL PLANT UPGRADE
CLIENT PN

**ARCHITECTURAL**
**SOLIDS HANDLING BUILDING**
**CODE REVIEW PLAN**
**FIRST FLOOR**

0 1" 2"

| | |
|---|---|
| FILENAME | 215786–00A103 |
| SCALE | 1/4" = 1'–0" |

SHEET **00A103**

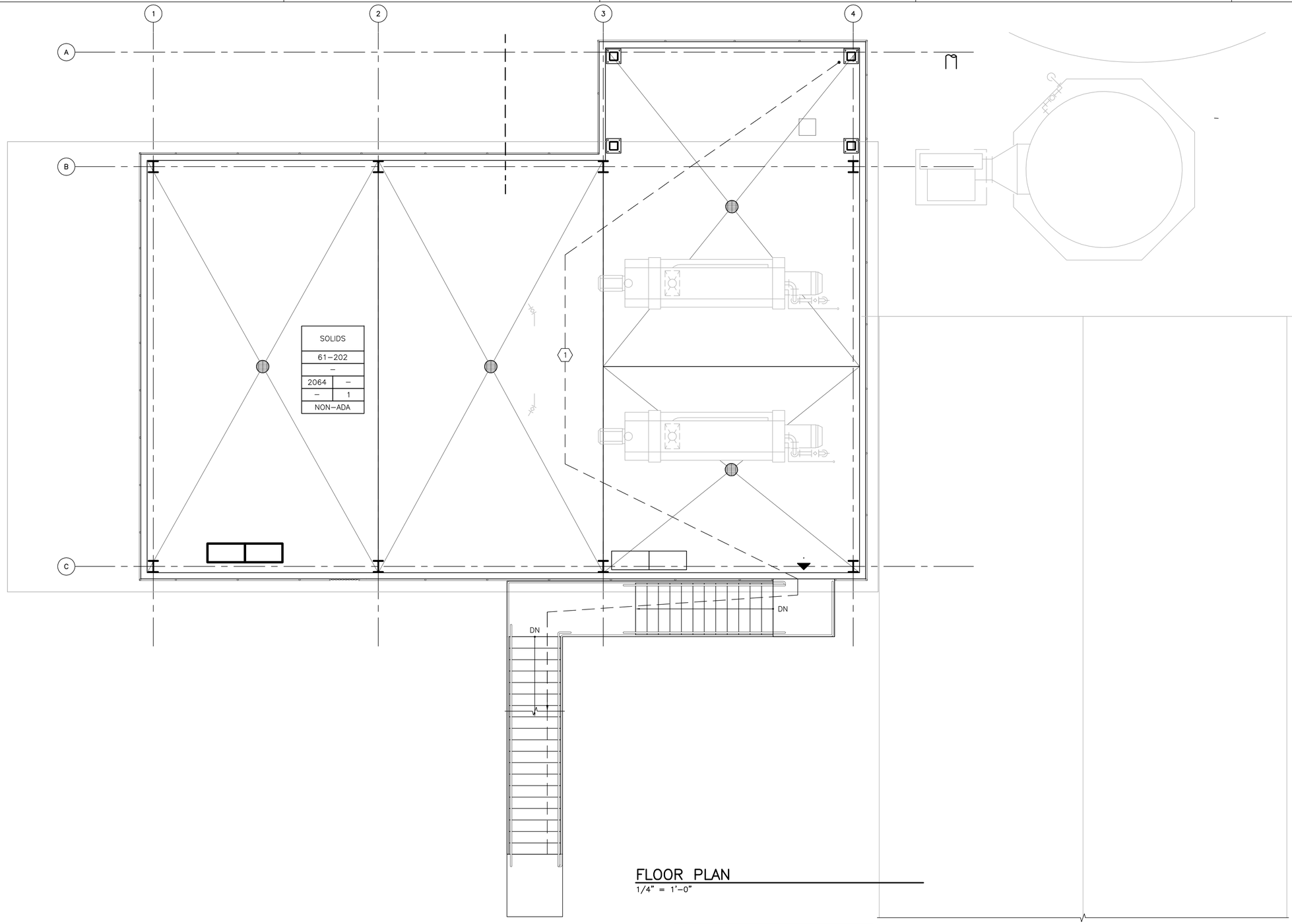


KEY NOTES:

1 PATH OF TRAVEL = 105 FEET.

FLOOR PLAN

1/4" = 1'-0"

FILE: 215786-00A104.dwg
DATE: Oct 06, 2015-7:22:45pm, rsnider

HDR Engineering, Inc.

| ISSUE | DATE | DESCRIPTION |
|---|---|---|
| A | JUNE 2015 | ISSUED FOR BID |

| | |
|---|---|
| PROJECT MANAGER | C. OLSON |
| DESIGNED | M. EVERETT |
| DESIGNED | |
| CHECKED | |
| DRAWN | M. MENDOZA |
| DATE | JUNE 30, 2015 |
| PROJECT NUMBER | 215786 |

REGISTERED PROFESSIONAL ENGINEER
CRAIG A. OLSON
NO. 39819
EXP. 12/31/15
CIVIL
STATE OF CALIFORNIA
06-30-15

CITY OF PINOLE CALIFORNIA 1903

PINOLE/HERCULES
WATER POLLUTION
CONTROL PLANT UPGRADE
CLIENT PN

**ARCHITECTURAL**
**SOLIDS HANDLING BUILDING**
**CODE REVIEW PLAN**
**SECOND FLOOR**

0 1" 2"

| | |
|---|---|
| FILENAME | 215786-00A104 |
| SCALE | 1/4" = 1'-0" |

SHEET **00A104**

# DOOR SCHEDULE

| DOOR NO. | DOOR TYPE | DOOR SWING | DOOR SIZE | | | DOOR MATERIALS | | FRAME MATERIAL & DETAILS | | HARDWARE GROUP | REMARKS |
|---|---|---|---|---|---|---|---|---|---|---|---|
| | | | WIDTH | HEIGHT | THICKNESS | MATERIAL | FINISH | MATERIAL | FINISH | | |
| 14–101A | TYPE 2 | RHRA | PR 6'–0" | 7'–0" | 1–3/4" | HM | PAINT | HM | PAINT | SEE SPECIFICATION SECTION 08700 | |
| 14–102B | TYPE 1 | RHRB | 3'–0" | 7'–0" | 1–3/4" | HM | PAINT | HM | PAINT | SEE SPECIFICATION SECTION 08700 | |
| 61–101A | TYPE 5 | N/A | 8'–0" | 10'–0" | | | | | | SEE SPECIFICATION SECTION 08700 | MOTOR OPERATED |
| 61–101B | TYPE 2 | RHRA | PR 6'–0" | 7'–0" | 1–3/4" | HM | PAINT | HM | PAINT | SEE SPECIFICATION SECTION 08700 | WITH LOUVERED TRANSOM ABOVE |
| 61–101C | TYPE 1 | LHRB | 3'–0" | 7'–0" | 1–3/4" | HM | PAINT | HM | PAINT | SEE SPECIFICATION SECTION 08700 | |
| 61–101D | TYPE 2 | RHRA | PR 6'–0" | 7'–0" | 1–3/4" | HM | PAINT | HM | PAINT | SEE SPECIFICATION SECTION 08700 | 8"X2'–0" LITE IN DOORS |
| 61–102A | TYPE 1 | LHRB | 3'–0" | 7'–0" | 1–3/4" | HM | PAINT | HM | PAINT | SEE SPECIFICATION SECTION 08700 | |
| 61–102B | TYPE 1 | LHRB | 3'–0" | 7'–0" | 1–3/4" | HM | PAINT | HM | PAINT | SEE SPECIFICATION SECTION 08700 | |
| 61–102C | TYPE 6 | N/A | 12'–0" | 12'–0" | | | | | | SEE SPECIFICATION SECTION 08700 | MOTOR OPERATED |
| 66–101 | TYPE 4 | RHRA | PR 5'–8" | 10'–0" | 1–3/4" | HM | PAINT | HM | PAINT | SEE SPECIFICATION SECTION 08700 | WITH 2'X7' LOUVERED AREA |
| | | | | | | | | | | | |

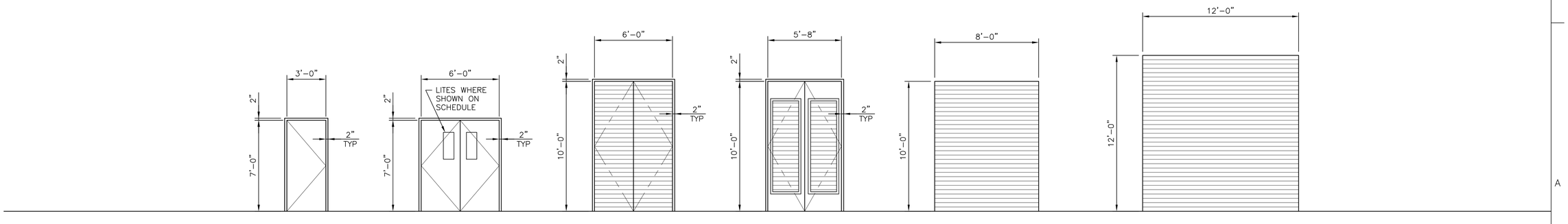


## DOOR TYPES

FILE: 215786–00A106.dwg
DATE: Oct. 06, 2015–7:22:50pm, rsnider

HDR Engineering, Inc.

| ISSUE | DATE | DESCRIPTION |
|---|---|---|
| | | |
| | | |
| | | |
| | | |
| | | |
| | | |
| A | JUNE 2015 | ISSUED FOR BID |

| | |
|---|---|
| PROJECT MANAGER | C. OLSON |
| | |
| DESIGNED | M. EVERETT |
| DESIGNED | |
| CHECKED | C. OLSON |
| DRAWN | M. MENDOZA |
| DATE | JUNE 30, 2015 |
| | |
| PROJECT NUMBER | 215786 |

REGISTERED PROFESSIONAL ENGINEER
CRAIG A. OLSON
NO. 39819
EXP. 12/31/15
CIVIL
STATE OF CALIFORNIA
06-30-15

CITY OF PINOLE CALIFORNIA 1903

PINOLE/HERCULES
WATER POLLUTION
CONTROL PLANT UPGRADE
CLIENT PN

**ARCHITECTURAL**

**DOOR AND LOUVER SCHEDULE**

0 1" 2"

| | |
|---|---|
| FILENAME | 215786–00A106 |
| SCALE | NTS |

SHEET **00A106**

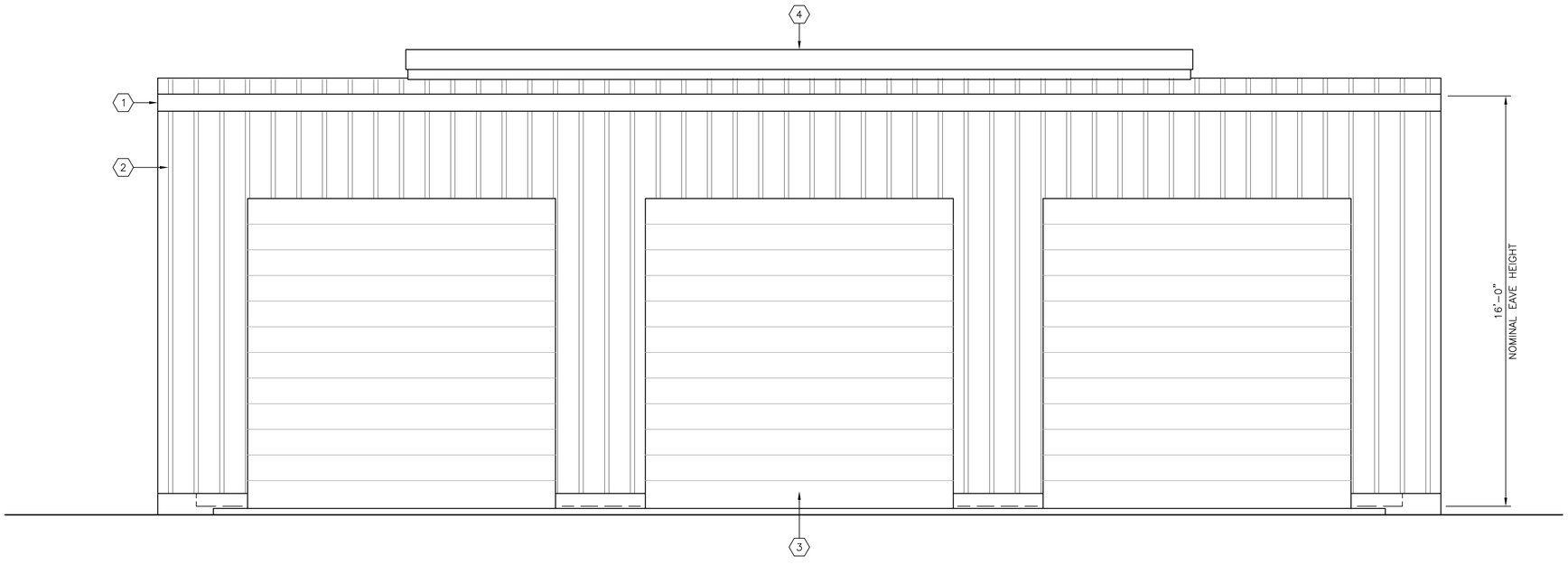


## NORTH BUILDING ELEVATION

3/8" = 1'-0"

(SOUTH ELEVATION SIMILAR, NO DOORS)

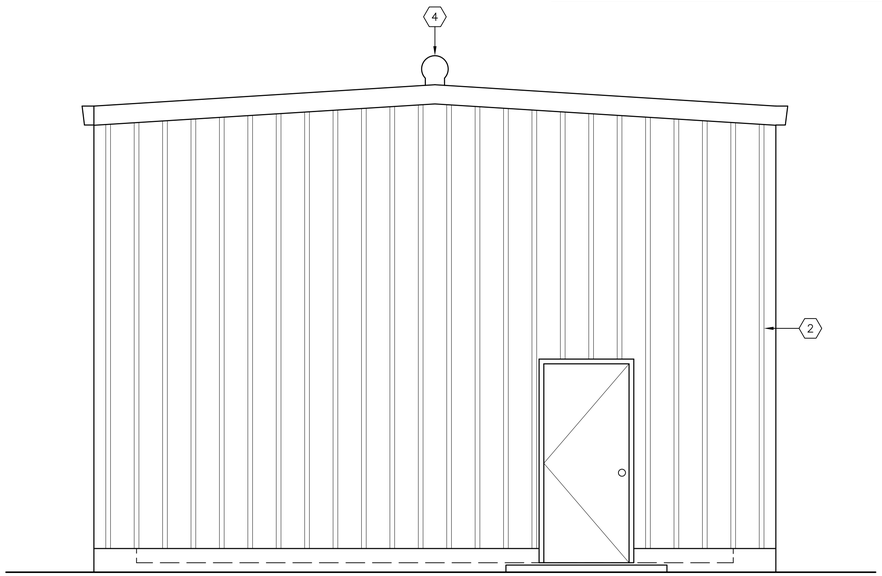


## EAST BUILDING ELEVATION

3/8" = 1'-0"

(WEST ELEVATION SIMILAR, BUT MIRRORED)

### KEY NOTES:

1. FASCIA STYLE RAIN GUTTER ALONG EAVE LINE, TYP.
2. CORRUGATED SIDING WITH FACTORY FINISH.
3. ROLL-UP DOOR 12' x 12', TYP OF 3.
4. RIDGE VENT.
5. 36" MAN DOOR.

FILE: 215786-01A101.dwg
DATE: Oct 07, 2015-4:28:57pm, rsnider

HDR Engineering, Inc.

| ISSUE | DATE | DESCRIPTION |
|---|---|---|
| A | JUNE 2015 | ISSUED FOR BID |

| | |
|---|---|
| PROJECT MANAGER | C. OLSON |
| DESIGNED | M. EVERETT |
| DESIGNED | |
| CHECKED | |
| DRAWN | P. VAN MEURS |
| DATE | JUNE 30, 2015 |
| PROJECT NUMBER | 215786 |

REGISTERED PROFESSIONAL ENGINEER
CRAIG A. OLSON
NO. 39819
EXP. 12/31/15
CIVIL
STATE OF CALIFORNIA
06-30-15

CITY OF PINOLE CALIFORNIA 1903

PINOLE/HERCULES
WATER POLLUTION
CONTROL PLANT UPGRADE
CLIENT PN

**ARCHITECTURAL**

**PUBLIC WORKS BUILDING ELEVATIONS**

0 1" 2"

| | |
|---|---|
| FILENAME | 215786-01A101 |
| SCALE | NTS |

SHEET **01A101**

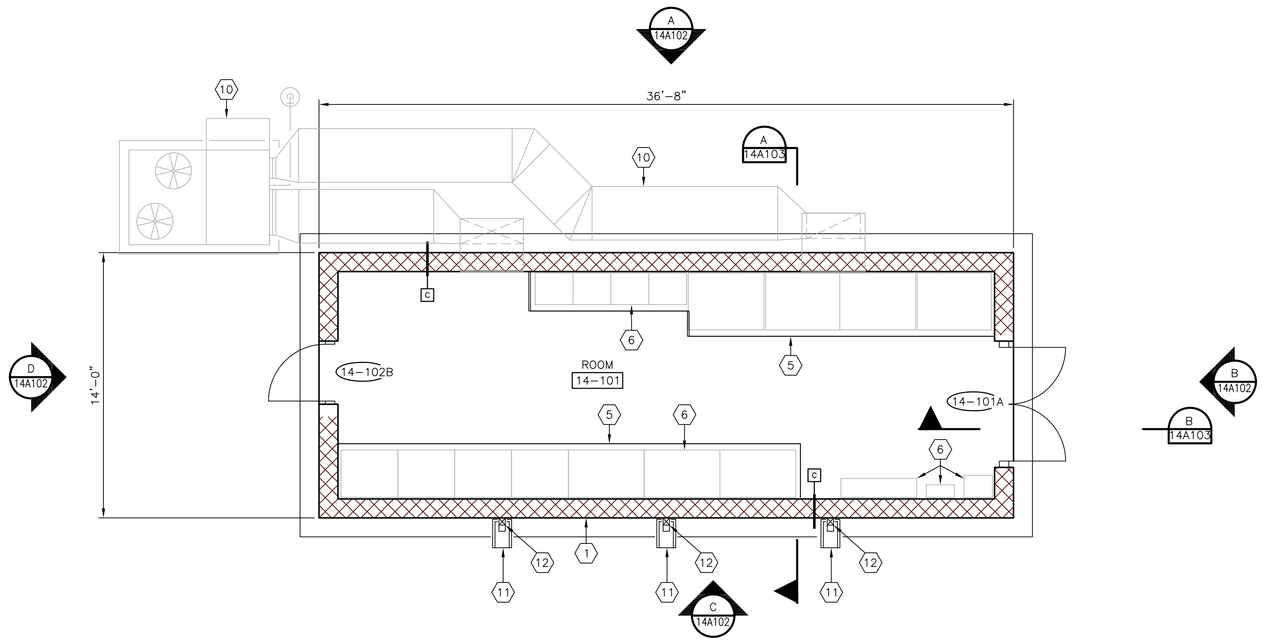


## FLOOR PLAN

1/4" = 1'-0"

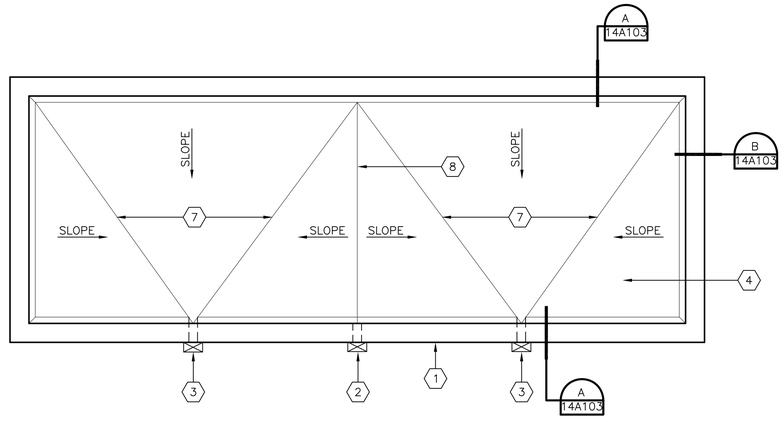


## ROOF PLAN

1/4" = 1'-0"

## KEY NOTES:

1. CMU WALL.
2. OVERFLOW SCUPPER.
3. SCUPPER.
4. MEMBRANE ROOFING SYSTEM.
5. HOUSEKEEPING PAD.
6. ELECTRICAL EQUIPMENT. SEE ELECTRICAL DRAWINGS.
7. VALLEY LINE.
8. RIDGE LINE.
9. NOT USED.
10. MECHANICAL EQUIPMENT. SEE MECHANICAL DRAWINGS.
11. SPLASH BLOCK.
12. DOWNSPOUT.

FILE: 215786-14A101.dwg
DATE: Oct 07, 2015-4:36:04pm, rsnider

HDR Engineering, Inc.

| ISSUE | DATE | DESCRIPTION |
|---|---|---|
| | | |
| | | |
| | | |
| | | |
| | | |
| | | |
| A | JUNE 2015 | ISSUED FOR BID |

| | |
|---|---|
| PROJECT MANAGER | C. OLSON |
| | |
| DESIGNED | C. OLSON |
| DESIGNED | M. EVERETT |
| CHECKED | |
| DRAWN | M. MENDOZA |
| DATE | JUNE 30, 2015 |
| | |
| PROJECT NUMBER | 215786 |

REGISTERED PROFESSIONAL ENGINEER
CRAIG A. OLSON
NO. 39819
EXP. 12/31/15
CIVIL
STATE OF CALIFORNIA
06-30-15

CITY OF PINOLE CALIFORNIA 1903

PINOLE/HERCULES
WATER POLLUTION
CONTROL PLANT UPGRADE
CLIENT PN

**ARCHITECTURAL**

**ELECTRICAL BUILDING FLOOR AND ROOF PLAN**

0 1" 2"

| | |
|---|---|
| FILENAME | 215786-14A101 |
| SCALE | 1/4" = 1'-0" |

SHEET
**14A101**

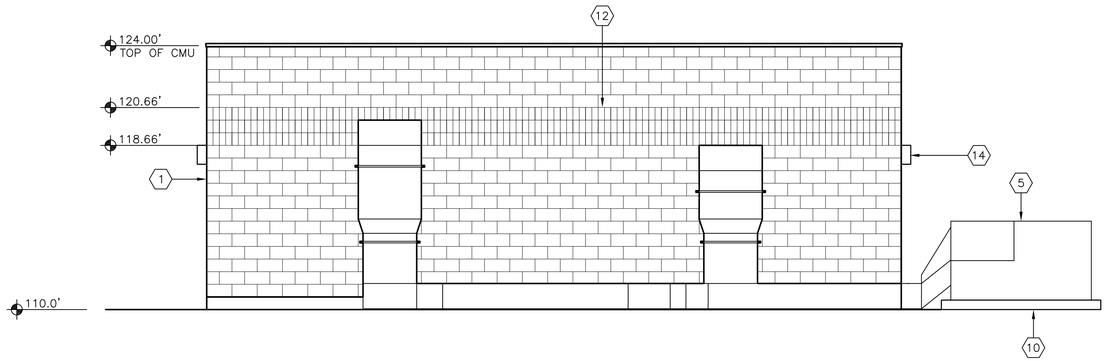


NORTH ELEVATION
SCALE: 1/4" = 1'-0"

A
14A101

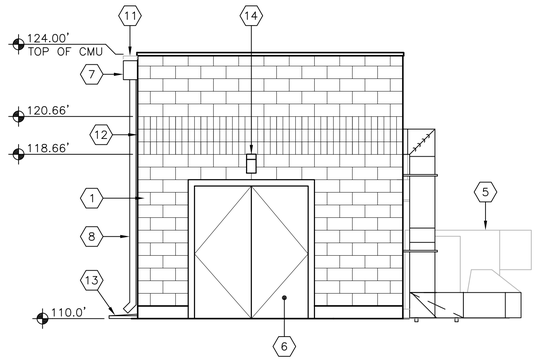


EAST ELEVATION
SCALE: 1/4" = 1'-0"

B
14A101

## KEY NOTES:

1. CMU BLOCK.
2. NOT USED.
3. 1'-0"x4'-0" LOUVER.
4. 1'-6"x3'-0" LOUVER.
5. HVAC EQUIPMENT. SEE MECHANICAL DRAWINGS.
6. DOOR 14-101A.
7. SCUPPER.
8. DOWNSPOUT.
9. DOOR 14-101B.
10. EQUIPMENT PAD.
11. OVERFLOW SCUPPER.
12. 3 SCORE BLOCK, 3 COURSES HIGH.
13. SPLASH BLOCK.
14. WALL LIGHT.

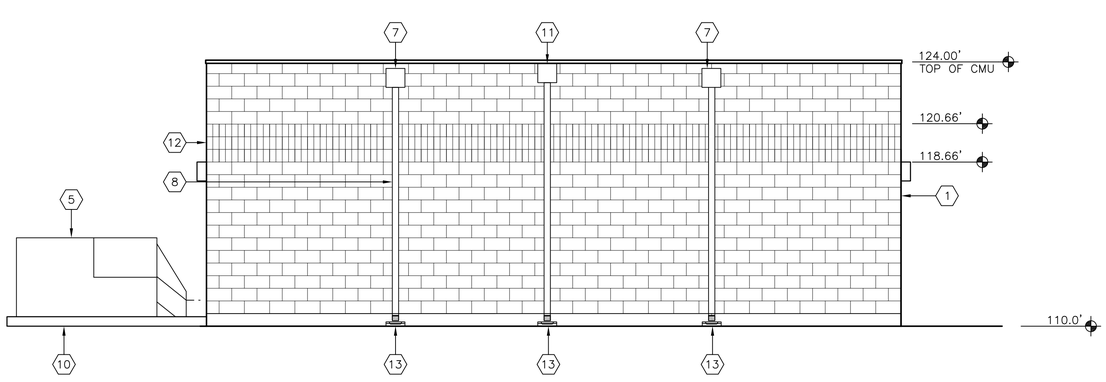


SOUTH ELEVATION
SCALE: 1/4" = 1'-0"

C
14A101

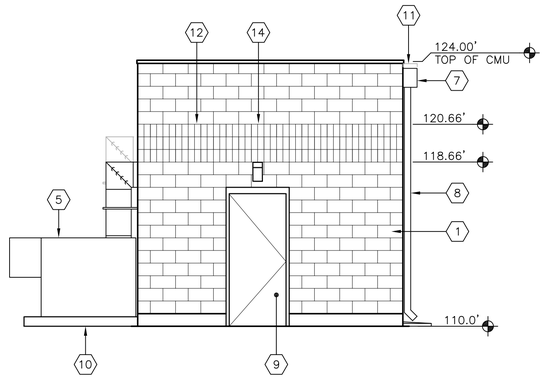


WEST ELEVATION
SCALE: 1/4" = 1'-0"

D
14A101

FILE: 215786-14A102.dwg
DATE: Oct 07, 2015-4:36:11am, rsnider

HDR Engineering, Inc.

| ISSUE | DATE | DESCRIPTION |
|---|---|---|
| A | JUNE 2015 | ISSUED FOR BID |

| | |
|---|---|
| PROJECT MANAGER | C. OLSON |
| DESIGNED | C. OLSON |
| DESIGNED | M. EVERETT |
| CHECKED | |
| DRAWN | M. MENDOZA |
| DATE | JUNE 30, 2015 |
| PROJECT NUMBER | 215786 |

REGISTERED PROFESSIONAL ENGINEER
CRAIG A. OLSON
NO. 39819
EXP. 12/31/15
CIVIL
STATE OF CALIFORNIA
06-30-15

CITY OF PINOLE CALIFORNIA 1903

PINOLE/HERCULES
WATER POLLUTION
CONTROL PLANT UPGRADE
CLIENT PN

**ARCHITECTURAL**

**ELECTRICAL BUILDING ELEVATIONS**

0 1" 2"

| | |
|---|---|
| FILENAME | 215786-14A102 |
| SCALE | 1/4" = 1'-0" |

SHEET
**14A102**

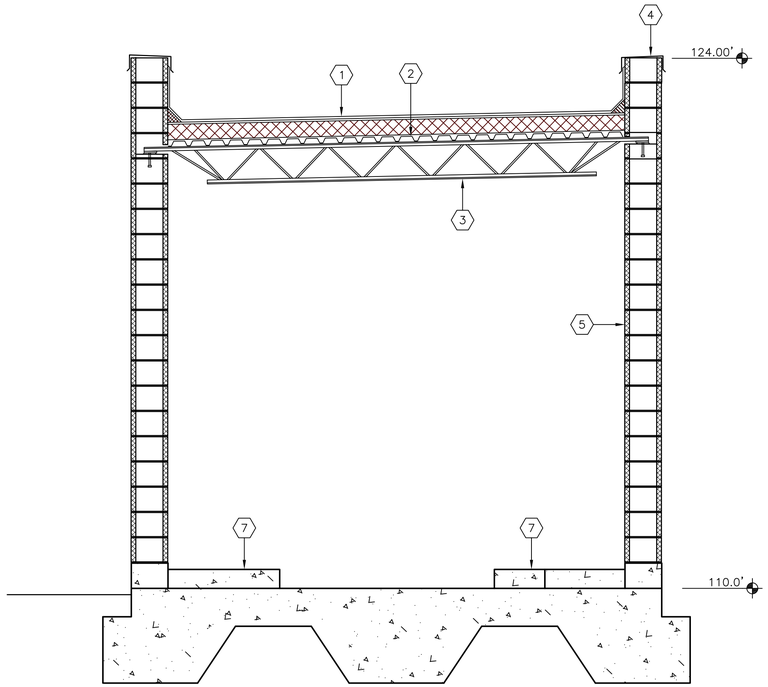


SECTION
SCALE: 1/2" = 1'-0"

A
14A101

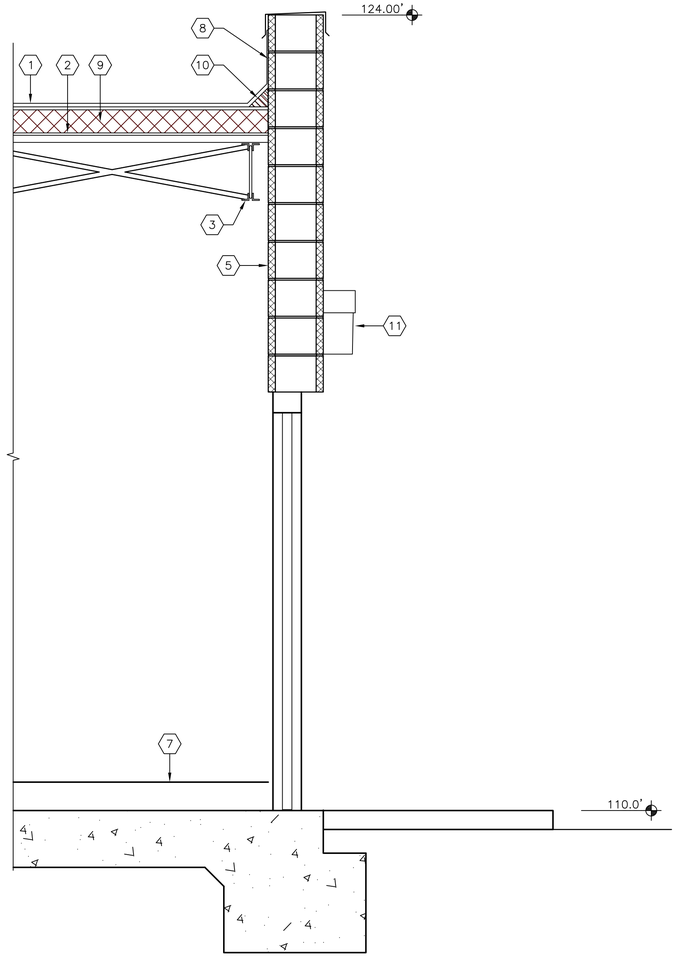


SECTION
SCALE: 3/4" = 1'-0"

B
14A101

## KEY NOTES:

1. MEMBRANE ROOFING SYSTEM.
2. METAL DECK.
3. JOIST.
4. WALL TOPPER.
5. CMU.
6. NOT USED.
7. HOUSEKEEPING PAD.
8. SEAL.
9. INSULATION.
10. CANT.
11. WALL LIGHT.

FILE: 215786-14A103.dwg
DATE: Oct 07, 2015-4:36:17am, rsnider

HDR Engineering, Inc.

| ISSUE | DATE | DESCRIPTION |
|---|---|---|
| A | JUNE 2015 | ISSUED FOR BID |

| | |
|---|---|
| PROJECT MANAGER | C. OLSON |
| DESIGNED | C. OLSON |
| DESIGNED | M. EVERETT |
| CHECKED | |
| DRAWN | R. SNIDER |
| DATE | JUNE 30, 2015 |
| PROJECT NUMBER | 215786 |

REGISTERED PROFESSIONAL ENGINEER
CRAIG A. OLSON
NO. 39819
EXP. 12/31/15
CIVIL
STATE OF CALIFORNIA
04-30-15

CITY OF PINOLE CALIFORNIA 1903

PINOLE/HERCULES
WATER POLLUTION
CONTROL PLANT UPGRADE
CLIENT PN

**ARCHITECTURAL**

**ELECTRICAL BUILDING SECTIONS AND DETAILS**

0 1" 2"

| | |
|---|---|
| FILENAME | 215786-14A103 |
| SCALE | AS NOTED |

SHEET
**14A103**

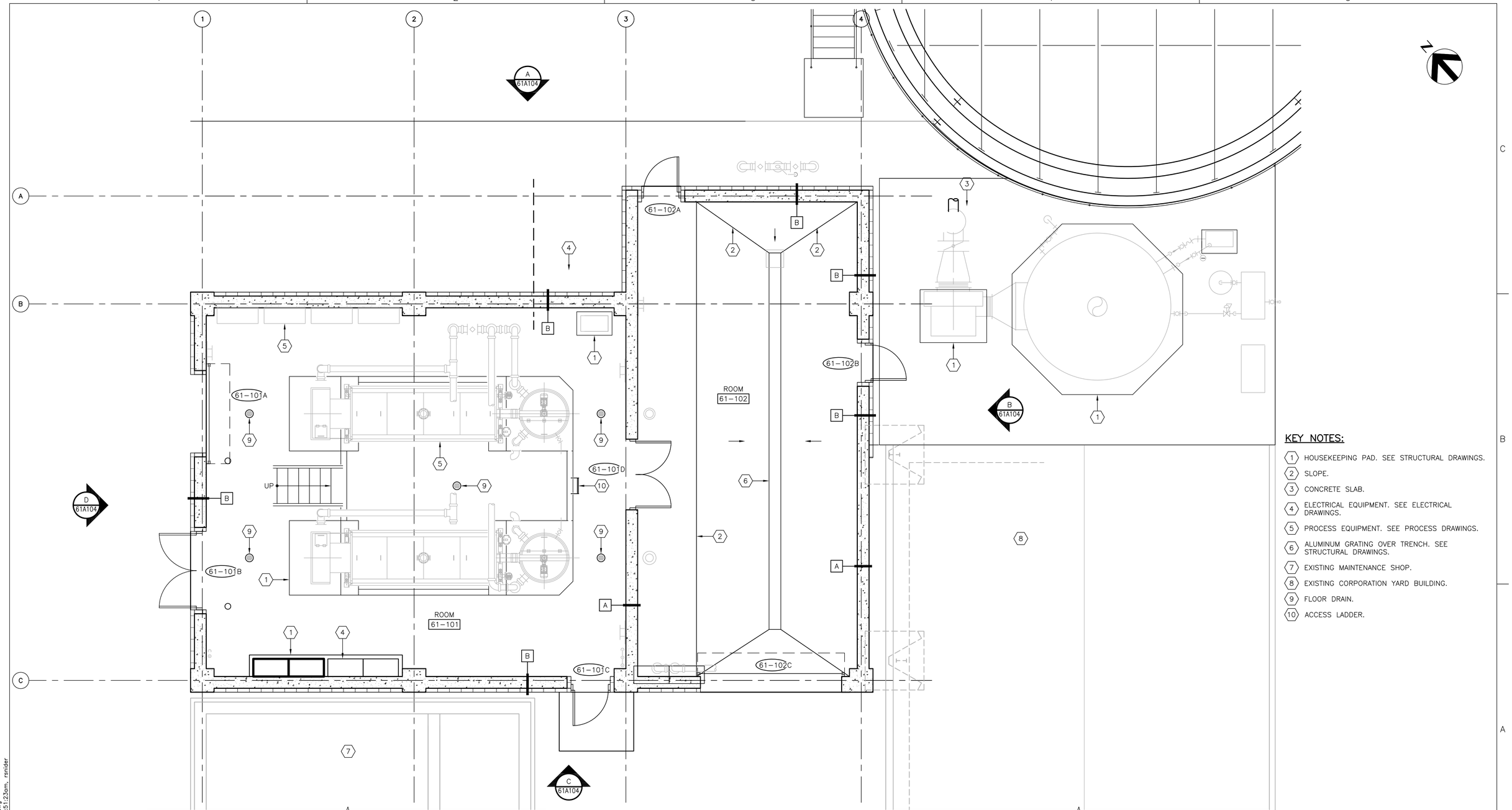


## KEY NOTES:

1. HOUSEKEEPING PAD. SEE STRUCTURAL DRAWINGS.
2. SLOPE.
3. CONCRETE SLAB.
4. ELECTRICAL EQUIPMENT. SEE ELECTRICAL DRAWINGS.
5. PROCESS EQUIPMENT. SEE PROCESS DRAWINGS.
6. ALUMINUM GRATING OVER TRENCH. SEE STRUCTURAL DRAWINGS.
7. EXISTING MAINTENANCE SHOP.
8. EXISTING CORPORATION YARD BUILDING.
9. FLOOR DRAIN.
10. ACCESS LADDER.

# FLOOR PLAN

1/4" = 1'-0"

FILE: 215786-61A101.dwg
DATE: Oct 07, 2015-4:51:23pm, rsnider

HDR Engineering, Inc.

| ISSUE | DATE | DESCRIPTION |
|---|---|---|
| A | JUNE 2015 | ISSUED FOR BID |

| | |
|---|---|
| PROJECT MANAGER | C. OLSON |
| DESIGNED | C. OLSON |
| DESIGNED | M. EVERETT |
| CHECKED | |
| DRAWN | M. MENDOZA |
| DATE | JUNE 30, 2015 |
| PROJECT NUMBER | 215786 |

REGISTERED PROFESSIONAL ENGINEER
CRAIG A. OLSON
NO. 39819
EXP. 12/31/15
CIVIL
STATE OF CALIFORNIA
06-30-15

CITY OF PINOLE CALIFORNIA 1903

PINOLE/HERCULES
WATER POLLUTION
CONTROL PLANT UPGRADE
CLIENT PN

**ARCHITECTURAL**

**SOLIDS HANDLING BUILDING**
**FIRST FLOOR PLAN**

0 1" 2"

| | |
|---|---|
| FILENAME | 215786-61A101 |
| SCALE | 1/4" = 1'-0" |

SHEET
**61A101**

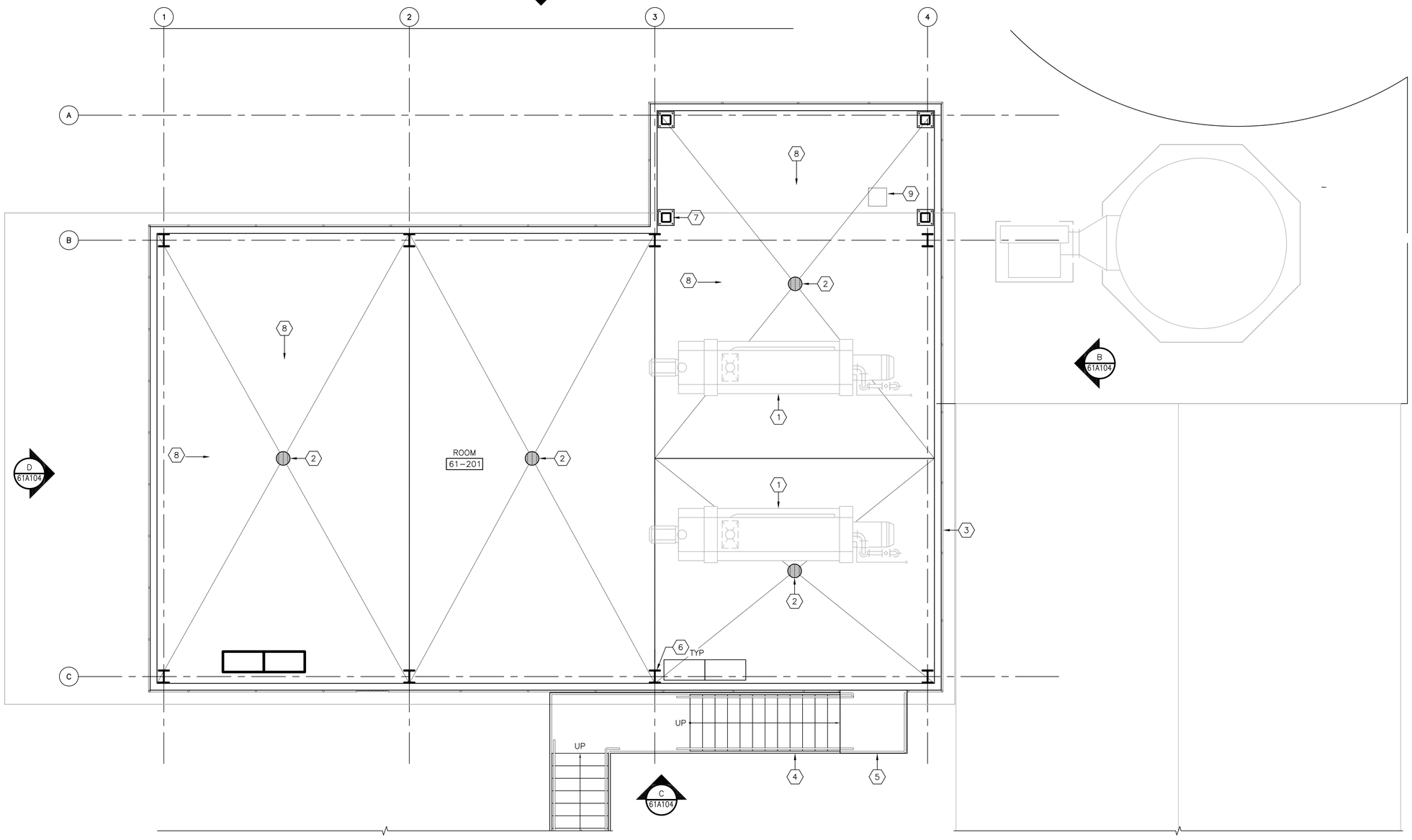


## KEY NOTES:

1. MECHANICAL EQUIPMENT. SEE MECHANICAL SHEETS.
2. FLOOR DRAIN.
3. GUARD RAIL.
4. STAIRS.
5. CONCRETE LANDING.
6. STEEL COLUMN. SEE STRUCTURAL SHEETS.
7. TUBE STEEL CANOPY SUPPORT. SEE STRUCTURAL SHEETS.
8. SLOPE TO DRAIN, TYP.
9. HVAC SUPPLY FAN, SEE MECHANICAL SHEETS.

# FLOOR PLAN

1/4" = 1'-0"

FILE: 215786-61A102.dwg
DATE: Oct 07, 2015-4:51:30am, rsnider

HDR Engineering, Inc.

| ISSUE | DATE | DESCRIPTION |
|---|---|---|
| A | JUNE 2015 | ISSUED FOR BID |

| | |
|---|---|
| PROJECT MANAGER | C. OLSON |
| | |
| DESIGNED | C. OLSON |
| DESIGNED | M. EVERETT |
| CHECKED | |
| DRAWN | M. MENDOZA |
| DATE | JUNE 30, 2015 |
| | |
| PROJECT NUMBER | 215786 |

REGISTERED PROFESSIONAL ENGINEER
CRAIG A. OLSON
NO. 39819
EXP. 12/31/15
CIVIL
STATE OF CALIFORNIA
06-30-15

CITY OF PINOLE CALIFORNIA 1903

PINOLE/HERCULES
WATER POLLUTION
CONTROL PLANT UPGRADE
CLIENT PN

**ARCHITECTURAL**

**SOLIDS HANDLING BUILDING**
**SECOND FLOOR PLAN**

0 1" 2"

| | |
|---|---|
| FILENAME | 215786-61A102 |
| SCALE | 1/4" = 1'-0" |

SHEET
**61A102**

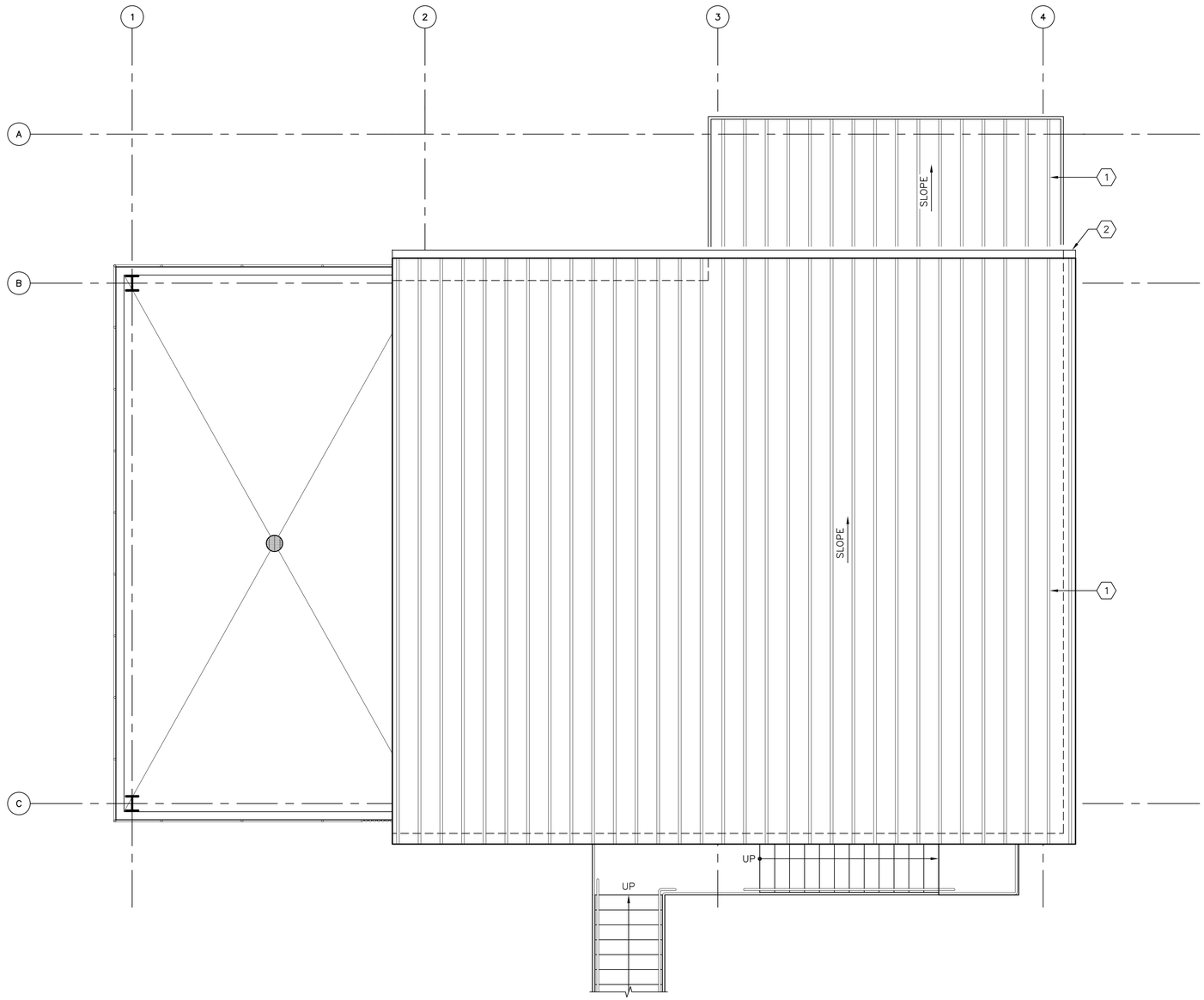


## KEY NOTES:

1. METAL STANDING SEAM CANOPY COVER.
2. GUTTER.

## ROOF PLAN

1/4" = 1'-0"

FILE: 215786-61A103.dwg
DATE: Oct 07, 2015-4:51:38pm, rsnider

HDR Engineering, Inc.

| ISSUE | DATE | DESCRIPTION |
|---|---|---|
| A | JUNE 2015 | ISSUED FOR BID |

| | |
|---|---|
| PROJECT MANAGER | C. OLSON |
| | |
| DESIGNED | C. OLSON |
| DESIGNED | M. EVERETT |
| CHECKED | |
| DRAWN | M. MENDOZA |
| DATE | JUNE 30, 2015 |
| | |
| PROJECT NUMBER | 215786 |

REGISTERED PROFESSIONAL ENGINEER
CRAIG A. OLSON
NO. 39819
EXP. 12/31/15
CIVIL
STATE OF CALIFORNIA

CITY OF PINOLE CALIFORNIA 1903

PINOLE/HERCULES
WATER POLLUTION
CONTROL PLANT UPGRADE
CLIENT PN

**ARCHITECTURAL**

**SOLIDS HANDLING BUILDING ROOF PLAN**

0 1" 2"

| | |
|---|---|
| FILENAME | 215786-61A103 |
| SCALE | 1/4" = 1'-0" |

SHEET **61A103**

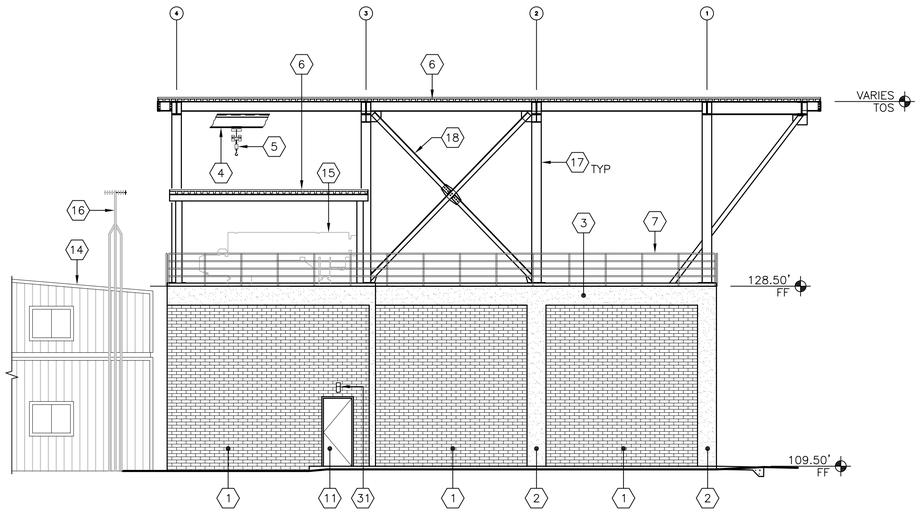


NORTH ELEVATION
1/8" = 1'-0"
A 61A101

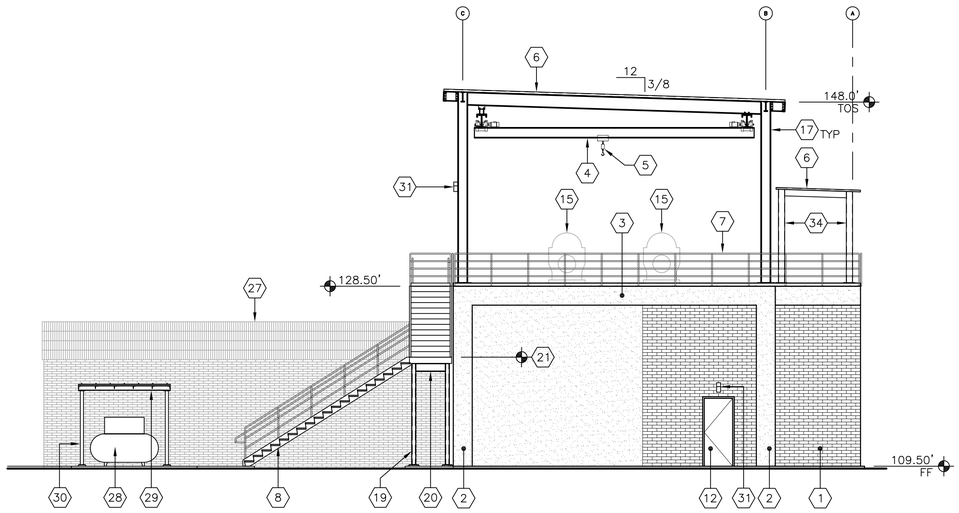


EAST ELEVATION
1/8" = 1'-0"
B 61A101

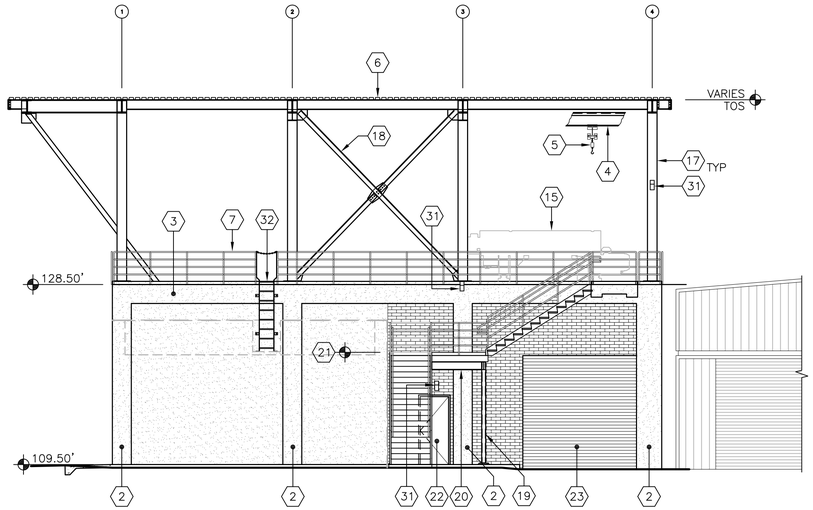


SOUTH ELEVATION
1/8" = 1'-0"
C 61A101

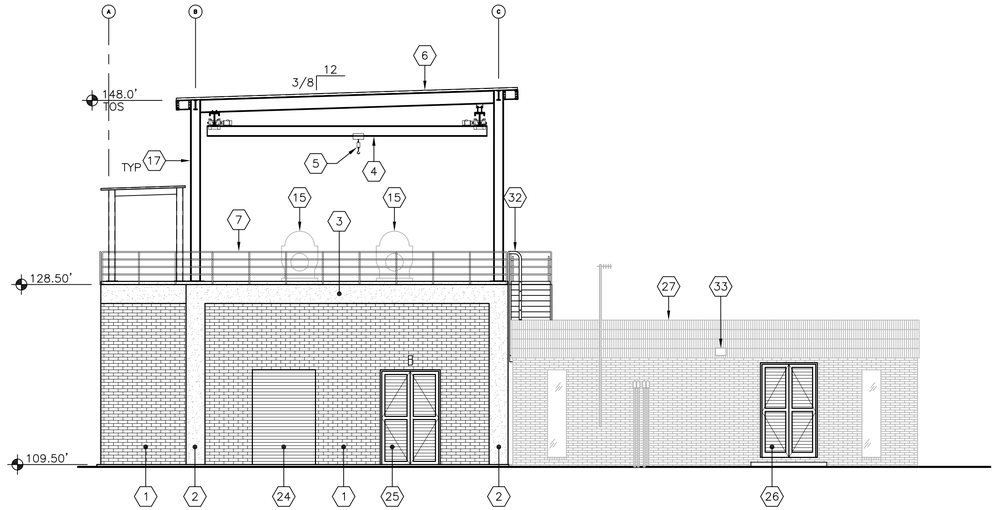


WEST ELEVATION
1/8" = 1'-0"
D 61A101

## KEY NOTES:

1. BRICK VENEER.
2. EXPOSED CONCRETE COLUMN.
3. EXPOSED CONCRETE BEAM.
4. BRIDGE CRANE SUPPORT.
5. BRIDGE CRANE.
6. METAL STANDING SEAM CANOPY ROOF.
7. GUARD RAIL.
8. ACCESS STAIRS. 32 RUNS @ 11 INCHES, 33 RISERS @ 6.9 INCHES.
9. GUTTER.
10. DOWNSPOUT.
11. DOOR 61-102A
12. DOOR 61-102B
13. (E) MAINTENANCE SHOP.
14. (E) CORPORATION YARD BUILDING.
15. PROCESS EQUIPMENT. SEE PROCESS DRAWINGS.
16. ANTENNA. SEE ELECTRICAL DRAWINGS.
17. STEEL COLUMN. SEE STRUCTURAL DRAWINGS.
18. STEEL BRACING. SEE STRUCTURAL DRAWINGS.
19. HSS COLUMN. TYPICAL OF 4.
20. W BEAM, TYPICAL OF 4.
21. STAIR LANDING EQUALS 11'-6".
22. DOOR 61-101C
23. DOOR 61-102C
24. DOOR 61-101A
25. DOOR 61-101B
26. DOOR 66-101
27. (E) MAINTENANCE SHOP
28. AIR COMPRESSOR AND RECEIVER TANK
29. METAL CANOPY
30. 4" STRUCTURAL TUBE SUPPORT
31. LIGHT
32. LADDER
33. (E) LIGHT
34. TUBE STEEL CANOPY SUPPORT, SEE STRUCTURAL SHEETS

FILE: 215786-61A104.dwg
DATE: Oct 07, 2015-4:51:45am, ranider

HDR Engineering, Inc.

| ISSUE | DATE | DESCRIPTION |
|---|---|---|
| A | JUNE 2015 | ISSUED FOR BID |

| | |
|---|---|
| PROJECT MANAGER | C. OLSON |
| DESIGNED | C. OLSON |
| DESIGNED | M. EVERETT |
| CHECKED | |
| DRAWN | M. MENDOZA |
| DATE | JUNE 30, 2015 |
| PROJECT NUMBER | 215786 |

REGISTERED PROFESSIONAL ENGINEER
CRAIG A. OLSON
NO. 39819
EXP. 12/31/15
CIVIL
STATE OF CALIFORNIA
06-30-15

CITY OF PINOLE CALIFORNIA 1903

PINOLE/HERCULES
WATER POLLUTION
CONTROL PLANT UPGRADE
CLIENT PN

**ARCHITECTURAL**

**SOLIDS HANDLING BUILDING ELEVATIONS**

0 1" 2"

| | |
|---|---|
| FILENAME | 215786-61A104 |
| SCALE | 1/8" = 1'-0" |

SHEET **61A104**

SEE SHEET 61A101 FOR CONTINUATION

SEE SHEET 61A102 FOR CONTINUATION

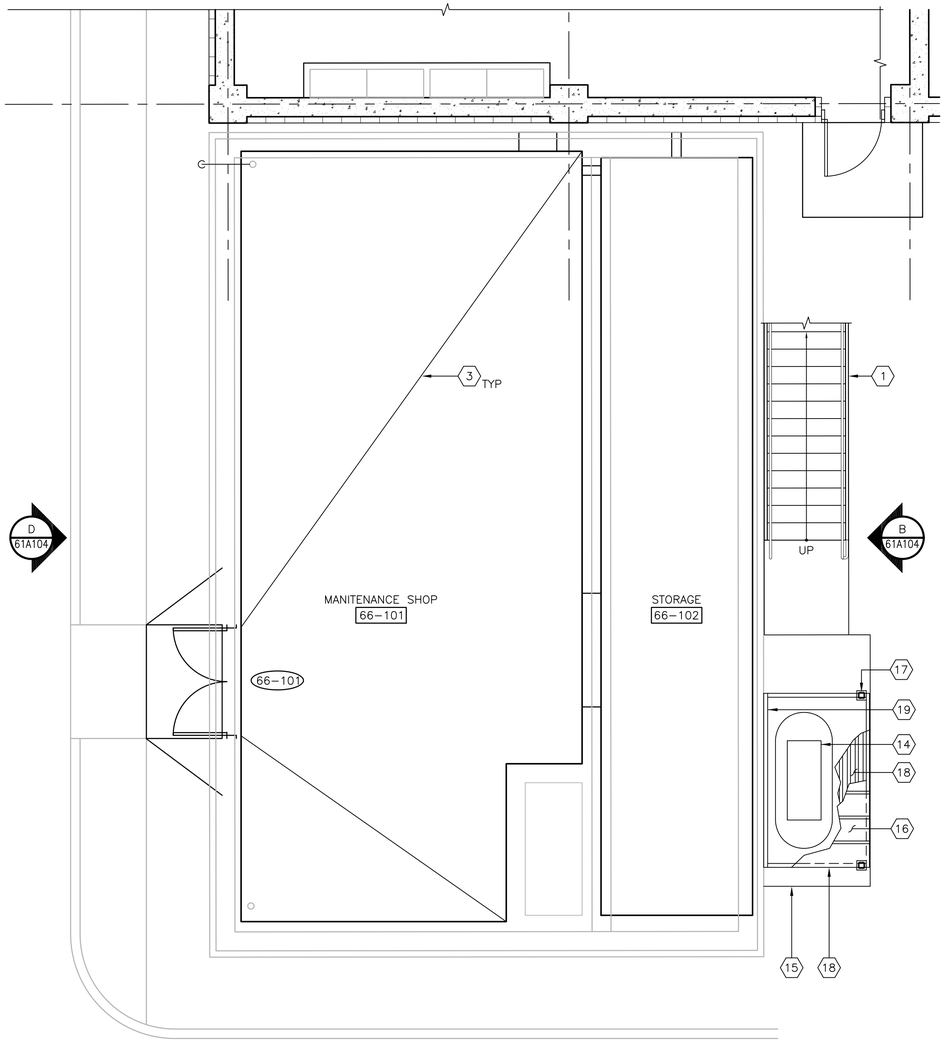


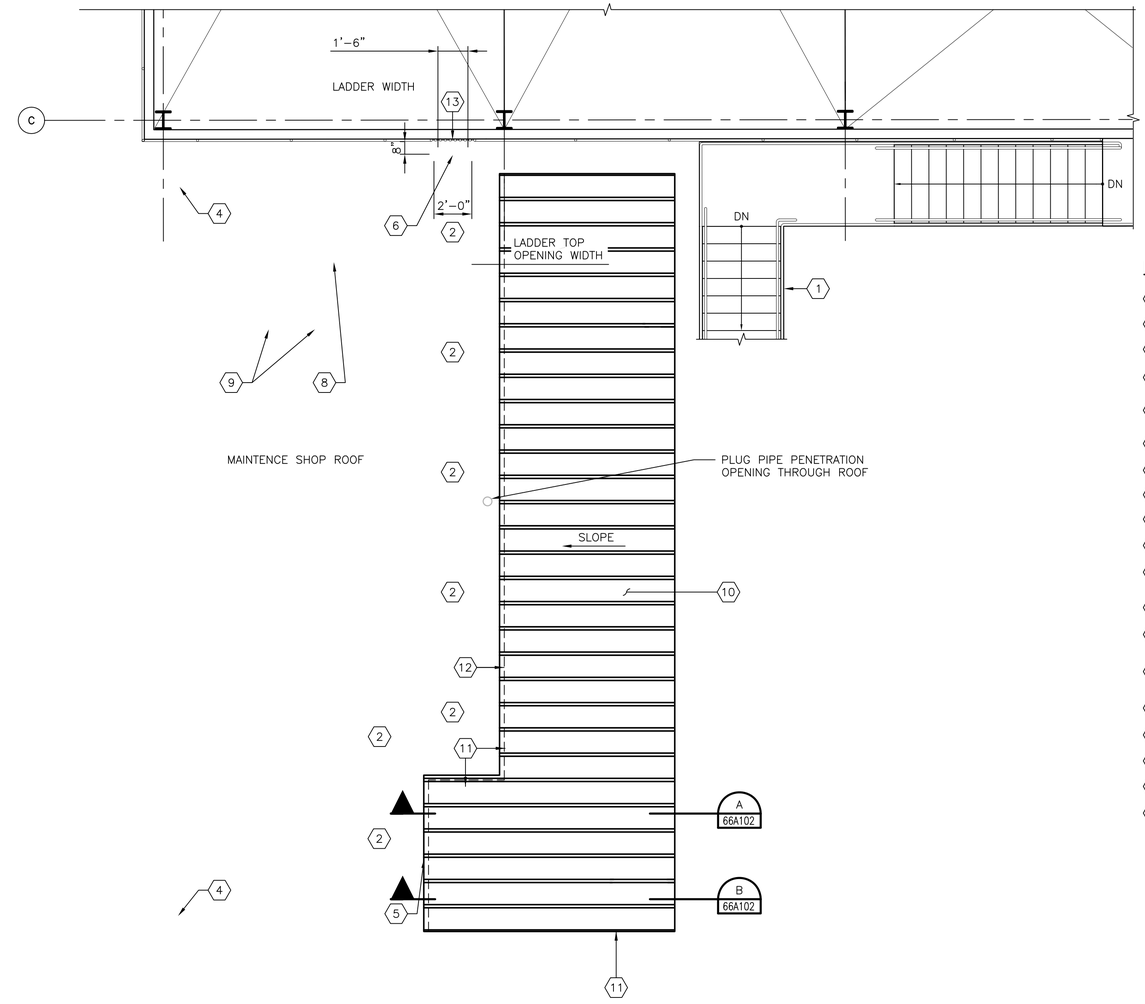


## KEY NOTES:

1. STAIRS.
2. (E) ROOF WQALKWAY PAD.
3. FLOOR SLOPE, TYP.
4. (E) ROOF DRAIN.
5. (E) PROCESS EQUIPMENT. SEE PROCESS SHEETS.
6. LADDER.
7. (E) GRATING.
8. EXHAUST FAN.
9. ROOF WALKWAY PAD.
10. STANDING SEAM METAL ROOF.
11. SEAL ALL ALONG BENT PLATE METAL DECK SUPPORTS.
12. EXISTING WALL BELOW.
13. SAFETY CHAIN WITH THUMB RELEASE LATCH.
14. AIR COMPRESSOR, SEE MECHANICAL SHEETS.
15. CONCRETE EQUIP PAD.
16. STANDING SEAM METAL ROOF.
17. 4X4X1/4" STRUCTURAL TUBE.
18. METAL DECK AND SUPPORT FRAMING.
19. 3"X5"X3/8" ANGLE, LLV. ATTACH TO WALL WITH 1/2" SS ADHESIVE ANCHORS AT 2' OC.

## FIRST FLOOR PLAN
1/4" = 1'-0"

## ROOF PLAN
1/4" = 1'-0"

FILE: 215786-66A101.dwg
DATE: Oct 07, 2015-4:54:24pm, rsnider

HDR Engineering, Inc.

| ISSUE | DATE | DESCRIPTION |
|---|---|---|
| A | JUNE 2015 | ISSUED FOR BID |

| | |
|---|---|
| PROJECT MANAGER | C. OLSON |
| DESIGNED | C. OLSON |
| DESIGNED | M. EVERETT |
| CHECKED | |
| DRAWN | M. MENDOZA |
| DATE | JUNE 30, 2015 |
| PROJECT NUMBER | 215786 |

REGISTERED PROFESSIONAL ENGINEER
CRAIG A. OLSON
NO. 39819
EXP. 12/31/15
CIVIL
STATE OF CALIFORNIA
04-30-15

CITY OF PINOLE CALIFORNIA 1903

PINOLE/HERCULES
WATER POLLUTION
CONTROL PLANT UPGRADE
CLIENT PN

**ARCHITECTURAL**

**MAINTENANCE SHOP**
**FIRST FLOOR AND ROOF PLANS**

0 1" 2"

| | |
|---|---|
| FILENAME | 215786-66A101 |
| SCALE | 1/4" = 1'-0" |

SHEET
**66A101**

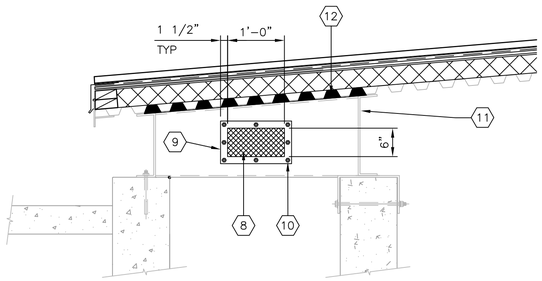


SECTION
3/4" = 1'-0"
A
66A101

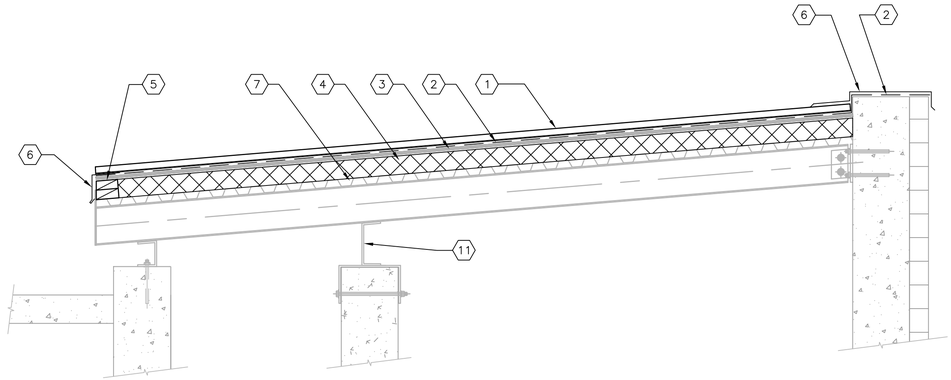


SECTION
3/4" = 1'-0"
B
66A102

## KEY NOTES:

1. STANDING SEAM METAL ROOF.
2. 30# ROOFING FELT.
3. ⅝" SHEATHING.
4. RIGID INSULATION.
5. PRESSURE TREATED BLOCKING.
6. METAL FLASHING.
7. STRUCTURAL METAL DECK.
8. BRONZE BIRD SCREEN.
9. ALUMINUM SCREEN FRAME.
10. 3/8" SS BOLTS, NUTS, AND LOCK WASHER, TYP.
11. SEAL ALL ALONG BENT PLATE METAL DECK SUPPORTS.
12. SEAL UNDERSIDE OF METAL DECK CORRUGATION WHERE SHOWN.

FILE: 215786-66A102.dwg
DATE: Oct 07, 2015-4:54:30pm, rsnider

HDR Engineering, Inc.

| ISSUE | DATE | DESCRIPTION |
|---|---|---|
| | | |
| | | |
| | | |
| | | |
| | | |
| | | |
| | | |
| A | JUNE 2015 | ISSUED FOR BID |

| | |
|---|---|
| PROJECT MANAGER | C. OLSON |
| | |
| DESIGNED | C. OLSON |
| DESIGNED | M. EVERETT |
| CHECKED | |
| DRAWN | M. MENDOZA |
| DATE | JUNE 30, 2015 |
| | |
| PROJECT NUMBER | 215786 |

REGISTERED PROFESSIONAL ENGINEER
THEODORE CHI-KONG CHOW
NO. 39878
EXP. 08/30/15
MECHANICAL
STATE OF CALIFORNIA
06-30-15

CITY OF PINOLE CALIFORNIA 1903

PINOLE/HERCULES
WATER POLLUTION
CONTROL PLANT UPGRADE
CLIENT PN

**ARCHITECTURAL**

**MAINTENANCE SHOP**
**ROOF SECTIONS**

0 1" 2"

| | |
|---|---|
| FILENAME | 215786-66A102 |
| SCALE | AS NOTED |

SHEET
**66A102**

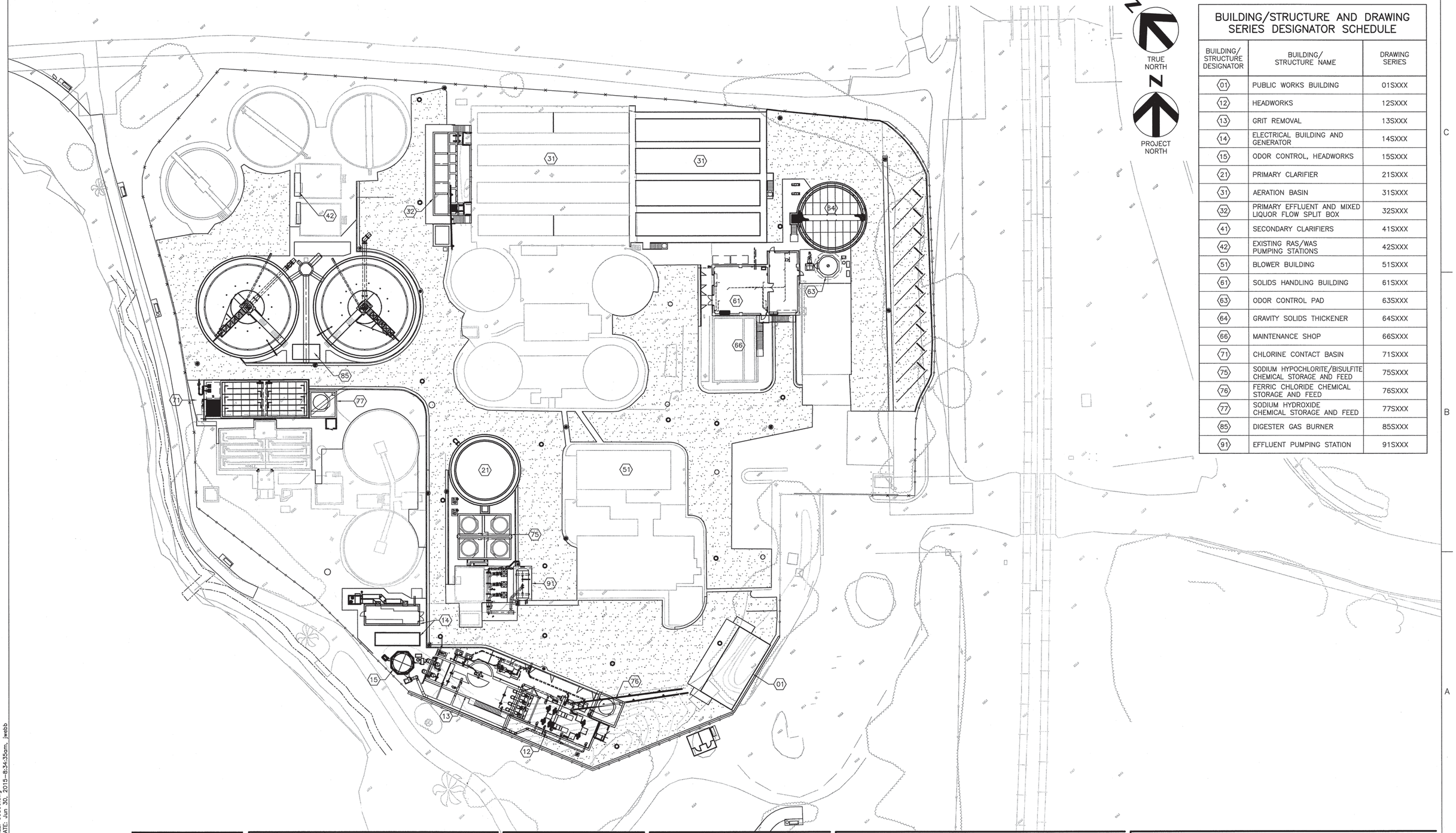


## BUILDING/STRUCTURE AND DRAWING SERIES DESIGNATOR SCHEDULE

| BUILDING/ STRUCTURE DESIGNATOR | BUILDING/ STRUCTURE NAME | DRAWING SERIES |
|---|---|---|
| 01 | PUBLIC WORKS BUILDING | 01SXXX |
| 12 | HEADWORKS | 12SXXX |
| 13 | GRIT REMOVAL | 13SXXX |
| 14 | ELECTRICAL BUILDING AND GENERATOR | 14SXXX |
| 15 | ODOR CONTROL, HEADWORKS | 15SXXX |
| 21 | PRIMARY CLARIFIER | 21SXXX |
| 31 | AERATION BASIN | 31SXXX |
| 32 | PRIMARY EFFLUENT AND MIXED LIQUOR FLOW SPLIT BOX | 32SXXX |
| 41 | SECONDARY CLARIFIERS | 41SXXX |
| 42 | EXISTING RAS/WAS PUMPING STATIONS | 42SXXX |
| 51 | BLOWER BUILDING | 51SXXX |
| 61 | SOLIDS HANDLING BUILDING | 61SXXX |
| 63 | ODOR CONTROL PAD | 63SXXX |
| 64 | GRAVITY SOLIDS THICKENER | 64SXXX |
| 66 | MAINTENANCE SHOP | 66SXXX |
| 71 | CHLORINE CONTACT BASIN | 71SXXX |
| 75 | SODIUM HYPOCHLORITE/BISULFITE CHEMICAL STORAGE AND FEED | 75SXXX |
| 76 | FERRIC CHLORIDE CHEMICAL STORAGE AND FEED | 76SXXX |
| 77 | SODIUM HYDROXIDE CHEMICAL STORAGE AND FEED | 77SXXX |
| 85 | DIGESTER GAS BURNER | 85SXXX |
| 91 | EFFLUENT PUMPING STATION | 91SXXX |

FILE: 00S00.dwg
DATE: Jun 30, 2015 - 8:34:35am, jwebb

HDR Engineering, Inc.

| ISSUE | DATE | DESCRIPTION |
|---|---|---|
| A | JUNE 2015 | ISSUED FOR BID |

| | |
|---|---|
| PROJECT MANAGER | C. OLSON |
| | |
| DESIGNED | O. TAVANGAR |
| DESIGNED | |
| CHECKED | O. TAVANGAR |
| DRAWN | D. ELDREDGE |
| DATE | JUNE 30, 2015 |
| | |
| PROJECT NUMBER | 215786 |

REGISTERED PROFESSIONAL ENGINEER
OMID TAVANGAR
No. 54655
EXP. 12/31/15
CIVIL
STATE OF CALIFORNIA
6/30/15

CITY OF PINOLE CALIFORNIA 1903

PINOLE/HERCULES
WATER POLLUTION
CONTROL PLANT UPGRADE
CLIENT PN

**STRUCTURAL**

**DESIGNATION KEY PLAN**

0 1" 2"

| | |
|---|---|
| FILENAME | 00S00 |
| SCALE | 1" = 30' |

SHEET **00S00**

# GENERAL STRUCTURAL NOTES (GSN)

## GENERAL

G1 SCOPE
THE NOTES ON THIS SHEET AND THE STANDARD STRUCTURAL DETAILS ARE GENERAL AND APPLY TO THE ENTIRE PROJECT WHETHER SPECIFICALLY CALLED OUT OR NOT, EXCEPT WHERE THERE ARE SPECIFIC INDICATIONS TO THE CONTRARY ON STRUCTURAL SHEETS. IF THERE ARE QUESTIONS, THEY SHALL BE SUBMITTED TO THE STRUCTURAL ENGINEER AND ANSWERED IN WRITING PRIOR TO CONSTRUCTION.

G2 APPLICABLE SPECIFICATIONS AND CODES
A. CALIFORNIA BUILDING CODE 2013, WITH APPLICABLE EDITIONS OF THE CODE REFERENCED STANDARDS.
B. ASCE7-10
C. ACI-318-11, ACI-350-06
D. AISC 360 AND 341
E. LOCAL JURISDICTION AMENDMENTS

G3 DESIGN CRITERIA

1. APPLIES TO ALL ABOVE-GRADE STRUCTURES (UNO)
A. DEAD LOAD:
1. ACTUAL TRIBUTARY STRUCTURE WEIGHT
2. SUPERIMPOSED DEAD LOAD: ACTUAL WT. OF ANY MECHANICAL EQUIPMENT.
B. LIVE LOAD:

| | |
|---|---|
| 1. SLAB ON GRADE, EQUIPMENT AREAS | 250 PSF |
| 2. ROOF: | 20 PSF (NOT REDUCIBLE) |
| 3. STORAGE, SHOP, MAINTENANCE: | 200 PSF |
| 4. WALKWAYS, STAIRWAYS, LANDINGS, PLATFORMS: | 100 PSF |
| 5. 2ND FLOOR IN SOLIDS HANDLING BUILDING: | 300 PSF |
| 6. BRIDGE CRANE IN SOLIDS HANDLING BUILDING: | 3.0 TON |
| 7. MONORAIL IN HEADWORKS: | 3.5 KIPS |

C. WIND:
1. ULTIMATE DESIGN WIND SPEED: $V_{ULT}$ = 115 MPH
2. NORMAL DESIGN WIND SPEED: $V_{asd}$ = 88 MPH
3. RISK CATEGORY: III
4. EXPOSURE: C

| STRUCTURE | 5. INTERNAL PRESSURE COEFFICIENT |
|---|---|
| 1. CHEMICAL FEED AREAS | 0.00 |
| 2. ALL OTHER BUILDINGS | ±0.18 |

D. SEISMIC:
1. ALL STRUCTURES:
a. RISK CATEGORY: III
b. IMPORTANCE FACTOR: 1.25
c. SPECTRAL RESPONSE ACCELERATION, Ss= 1.736
d. SPECTRAL RESPONSE ACCELERATION, S1= 0.688
e. SITE CLASS: D
f. SEISMIC DESIGN CATEGORY: D
g. SPECTRAL RESPONSE COEFFICIENT, SDS= 1.157
h. SPECTRAL RESPONSE COEFFICIENT, SD1= 0.688
i. BASIC SEISMIC FORCE RESISTING SYSTEM SEE TABLE BELOW.
j. ANALYSIS PROCEDURE: EQUIVALENT LATERAL FORCE ANALYSIS OR RESPONSE SPECTRUM ANALYSIS.
k. DESIGN BASE SHEAR: SEE TABLE BELOW.
l. SEISMIC RESPONSE COEFFICIENT: SEE TABLE BELOW
m. RESPONSED MODIFICATION FACTOR: SEE TABLE BELOW.

| STRUCTURE | i. BASIC SEISMIC FORCE RESISTING SYSTEM: | k. DESIGN BASE SHEAR $V = C_s * W$ W IS THE EFFECTIVE SEISMIC WEIGHT | l. SEISMIC RESPONSE COEFFICIENT ($C_S$) | m. RESPONSE MODIFICATION FACTOR "R" |
|---|---|---|---|---|
| SOLIDS HANDLING BUILDING | ORDINARY STEEL CONCENTRIC BRACED FRAME (LONGITUDINAL DIRECTION) | – | * | 3.25 |
| | ORDINARY STEEL MOMENT FRAME (TRANSVERSE DIRECTION) | – | * | 3.5 |
| | SPECIAL REINF CONCRETE / BEARING SHEAR WALL | 660* k | 0.25 | 5.0 |
| ELECTRICAL BUILDING | SPECIAL REINF CMU BLDG | 40.5k | 0.262 | 5.5 |
| GRIT REMOVAL | NONBUILDING STRUCTURE SIMILAR TO BUILDING | 1049.0* k | 0.723 | 1.25 |

*: RESPONSE SPECTRUM ANALYSIS PER ASCE 7-10 REQUIREMENTS

E. SNOW LOAD: NOT APPLICABLE

G4 SAFETY
SAFETY AND STRUCTURE STABILITY DURING CONSTRUCTION ARE THE SOLE RESPONSIBILITY OF THE CONTRACTOR. STRUCTURES HAVE BEEN DESIGNED TO RESIST THE DESIGN LIVE LOADS ONLY AS A COMPLETED STRUCTURE.

G5 OPENINGS
OPENINGS FOR PIPES, DUCTS, CONDUITS, ETC. ARE NOT ALL SHOWN ON THE STRUCTURAL DRAWINGS. COORDINATE AND PROVIDE OPENINGS AS REQUIRED TO ACCOMMODATE ALL WORK SHOWN OR SPECIFIED IN THE CONTRACT DOCUMENTS AND OTHERWISE REQUIRED FOR THE FURNISHING OF A FUNCTIONALLY COMPLETE PROJECT. REINFORCE AROUND OPENINGS PER STANDARD STRUCTURAL DETAILS UNLESS OTHERWISE SHOWN.

G6 SPECIAL INSPECTIONS
SPECIAL INSPECTIONS ARE REQUIRED IN ACCORDANCE WITH CHAPTER 1 AND CHAPTER 17 OF THE CBC. PAYMENT FOR THESE INSPECTIONS IS NOT THE RESPONSIBILITY OF THE CONTRACTOR. CONTRACTOR SHALL PROVIDE FOR FULL ACCESS TO THE WORK BY THE SPECIAL INSPECTOR AND SHALL PROVIDE FOR THESE INSPECTIONS IN HIS CONSTRUCTION SCHEDULE IN ACCORDANCE WITH THE SPECIFICATIONS. A SPECIAL INSPECTION PLAN WILL BE SUBMITTED UNDER SEPARATE COVER WITH THE PERMIT APPLICATION.

G7 STANDARD DETAILS
THE STANDARD DETAILS DEPICT TYPICAL DETAILING TO BE USED ON THIS PROJECT. IF CONDITIONS ARE NOT EXPLICITLY SHOWN ON THE DRAWINGS THEY SHALL BE MADE SIMILAR TO THE STANDARD DETAILS. OBTAIN APPROVAL OF ENGINEER IN WRITING FOR SIMILAR CONDITIONS PRIOR TO CONSTRUCTION.

G8 THE CONTRACTOR SHALL FIELD VERIFY ALL DIMENSIONS AND ELEVATIONS OF EXISTING CONSTRUCTION AS REQUIRED TO COORDINATE NEW CONSTRUCTION. SUBMIT REQUIRED CHANGES FOR APPROVAL.

G9 CONTRACTOR TO SUBMIT FOR REVIEW ALL EQUIPMENT SIZES, OPERATING WEIGHTS, VIBRATION FORCES, SUPPORT LOCATIONS, ALONG WITH ANY FLOOR OPENINGS, NOTCHES, AND RECESSES REQUIRED BY SUCH EQUIPMENT. CONCRETE SUPPORT PADS AND/OR FRAMING REQUIRED TO SUPPORT SAID EQUIPMENT SHALL NOT BE FABRICATED AND PLACED UNTIL THE CONCRETE SUPPORT PADS AND/OR FRAMING IS APPROVED TO SUPPORT THE EQUIPMENT.

G10 THE FOLLOWING NON-CONTRACTUAL GEOTECHNICAL REPORT WAS DEVELOPED FOR THIS PROJECT AND IS THE BASIS OF THIS STRUCTURAL DESIGN:
GEOTECHNICAL FIRM NAME: HDR ENGINEERING, INC.
ADDRESS: 2121 N. CALIFORNIA BLVD STE 475 WALNUT CREEK, CA 94596
REPORT NUMBER: TBD
REPORT DATE: MARCH 11, 2014
MAT FOUNDATIONS

| | BELOW LIQUEFIABLE LAYER | ABOVE LIQUEFIABLE LAYER |
|---|---|---|
| ALLOWABLE BEARING PRESSURE | 2500 PSF (D) | 400 PSF (D) |
| | 3000 PSF (D+L) | 500 PSF (D+L) |
| | 3750 PSF (TOTAL) | 600 PSF (TOTAL) |

PILE FOUNDATIONS:
SKIN FRICTION VARIES FROM ZERO TO 1000 PSF.

## CONCRETE:

C1 DESIGN STRENGTHS:
f'c = 4000 PSI
fy = 60,000 PSI

C2 CONCRETE COVER
UNLESS OTHERWISE NOTED, PROVIDE CONCRETE COVER FOR REINFORCING PER DETAIL 2 / 00S09

C3 SEE SPECIFICATIONS FOR REINFORCING PLACEMENT REQUIREMENTS.

C4 REFER TO OTHER DISCIPLINE DRAWINGS PRIOR TO CONSTRUCTION FOR EMBEDDED ITEMS AND PENETRATIONS NOT SHOWN ON STRUCTURAL DRAWINGS. AS REQUIRED TO ACCOMMODATE ALL WORK SHOWN OR SPECIFIED IN THE CONTRACT DOCUMENTS AND OTHERWISE REQUIRED FOR THE FURNISHING OF A FUNCTIONALLY COMPLETE PROJECT. REINFORCE AROUND OPENINGS PER STANDARD STRUCTURAL DETAILS UNLESS OTHERWISE SHOWN.

C5 PROVIDE 3/4" CHAMFERS AT ALL EXPOSED EDGES AND 1/2" CHAMFERS AT JOINTS AS SHOWN. NOT ALL CHAMFERS MAY BE SHOWN ON DRAWINGS.

C6 FIELD ADJUST REINFORCING AT OPENINGS AND EMBEDDED ITEMS AS INDICATED.

C7 ANCHOR BOLTS NOT SPECIFIED BY ENGINEER SHALL BE DESIGNED AND CERTIFIED BY A REGISTERED PROFESSIONAL ENGINEER, RETAINED BY THE CONTRACTOR, IN ACCORDANCE WITH APPLICABLE PROJECT AND CODE REQUIREMENTS. SUBMIT AS A SHOP DRAWING FOR REVIEW AND APPROVAL BY THE ENGINEER. COORDINATE LOCATION, SIZE AND EMBEDMENT PRIOR TO CASTING CONCRETE.

C8 CONTINUOUS WATERSTOP SHALL BE INSTALLED IN JOINTS SUBJECT TO STATIC WATER PRESSURE.

C9 UNLESS SPECIFICALLY AUTHORIZED BY ENGINEER IN WRITING, ABSOLUTELY NO WELDING OF REINFORCING BARS OR TORCHING TO BEND REINFORCING BARS SHALL BE ALLOWED WITHOUT SPECIFIC APPROVAL FROM THE STRUCTURAL ENGINEER.

C10 CONTRACTOR SHALL SUBMIT A CONCRETE PLACEMENT PLAN PER SPECIFICATION IDENTIFYING JOINT TYPES, JOINT LOCATIONS AND CONCRETE PLACEMENT SEQUENCE.

C11 ALL CAST IN PLACE AND POST-INSTALLED ANCHORS INDICATED IN THE STRUCTURAL DOCUMENTS SHALL COMPLY WITH APPENDIX D OF ACI 318 AND CHAPTER 19 OF THE CBC. ALL EXPANSION AND ADHESIVE ANCHORS SHALL HAVE THE ICC REPORT SHOWING EQUIVALENT LOAD CAPACITY. SUBMIT AND INSTALL PER THE ICC EVALUATION REPORT.

C12 UNLESS OTHERWISE NOTED, ALL WALL REINFORCING BARS SHALL BE CONTINUOUS AROUND CORNERS AND THROUGH COLUMNS OR PILASTERS. REINFORCEMENT SHALL BE EXTENDED INTO CONNECTING WALLS, AND LAPPED ON THE OPPOSITE FACE OF THE CONNECTING WALLS, AS INDICATED ELSEWHERE ON THIS SHEET OR ON THE DRAWINGS. VERTICAL WALL BARS SHALL BE LAPPED WITH DOWELS FROM BASE SLABS AND EXTENDED INTO THE TOP FACE OF ROOF OR FLOOR SLABS AND LAPPED WITH TOP SLAB REINFORCEMENT. UNLESS INDICATED OTHERWISE, CONTRACTOR MAY SPLICE CONTINUOUS SLAB OR LONGITUDINAL BEAM BARS AT LOCATIONS OF IT'S CHOOSING, EXCEPT THAT TOP BAR SPLICES SHALL BE LOCATED AT MIDSPAN AND BOTTOM BAR SPLICES SHALL BE LOCATED AT SUPPORTS. ALL REINFORCEMENT BENDS AND LAPS, UNLESS OTHERWISE NOTED, SHALL SATISFY STANDARD DETAIL. 7 / 00S09

C13 UNLESS OTHERWISE NOTED, WALL VERTICAL REINFORCING LAYER SHALL BE CLOSEST TO WALL SURFACE, AND WALL HORIZONTAL REINFORCING LAYERS SHALL BE PLACED ATTACHED TO & BETWEEN VERTICAL LAYERS.

## ALUMINUM:

A1 STRUCTURAL ALUMINUM YIELD STRENGTHS
STRUCTURAL ALUMINUM: Fy=35 KSI
STRUCTURAL ALUMINUM IS ALLOY 6061-T6 UNO

A2 DIMENSIONS:
TO CENTERLINES OF COLUMNS AND BEAMS, TOP SURFACES OF BEAMS AND TUBES AND BACKS OF CHANNELS AND ANGLES UNO.

A3 ELEVATIONS:
TOP OF ALUMINUM REFERS TO TOP SURFACE OR FLANGE OF MEMBER UNO.

A4 WHEN FILLET WELD SIZE IS NOT INDICATED, PROVIDE MAXIMUM WELD SIZE FOR THE MATERIAL THICKNESS IN ACCORDANCE WITH THE LATEST EDITION OF THE "ALUMINUM DESIGN MANUAL" BY THE ALUMINUM ASSOCIATION.

A5 ALUMINUM IN CONTACT WITH DISSIMILAR MATERIALS OR CONCRETE:
CONTACT SURFACES SHALL BE PROVIDED WITH GALVANIC SEPARATION PER SPECIFICATIONS.

## STEEL:

S1 DESIGN STRENGTHS:

| | |
|---|---|
| WIDE FLANGE AND TEES: | Fy=50 KSI |
| PIPES: | Fy=35 KSI |
| STAINLESS STEEL | Fy=33 KSI |
| HSS SECTIONS | Fy=46 KSI |
| ALL OTHER PLATES AND SHAPES: | Fy=36 KSI |

S2 DIMENSIONS:
TO CENTERLINES OF COLUMNS AND BEAMS, TOP SURFACES OF BEAMS AND TUBES AND BACKS OF CHANNELS AND ANGLES UNO.

S3 ELEVATIONS:
TOP OF STEEL REFERS TO TOP SURFACE OF MEMBER OR FLANGE UNO.

S4 WHEN FILLET WELD SIZE IS NOT INDICATED, PROVIDE MINIMUM WELD SIZE AS SPECIFIED BY AISC OR 3/16", WHICHEVER IS GREATER.

S5 ALL BOLTED STRUCTURAL CONNECTIONS ARE BEARING TYPE CONNECTIONS UNLESS OTHERWISE SPECIFIED TO BE SLIP-CRITICAL. PROVIDE LOAD INDICATING WASHERS AT SLIP-CRITICAL CONNECTIONS.

S6 CONFORM TO AISC 360, STEEL CONSTRUCTION MANUAL AND AISC 341, SEISMIC DESIGN MANUAL.

S7 ALL STEEL BEAMS SHALL RECEIVE STANDARD CAMBER PER THE SPECIFICATIONS UNLESS NOTED OTHERWISE ON THE PLANS. BEAMS REQUIRING SPECIAL CAMBER ARE DENOTED ON THE BEAMS SHOWN ON THE FRAMING PLANS. EXAMPLE: (+1/2") INDICATES ½".

S8 THE SEISMIC LOAD RESISTING SYSTEM (SLRS) IS DENOTED ON THE FRAMING PLANS AND FRAME ELEVATIONS. THE SLRS DESIGNATION INCLUDES THE MEMBER AND CONNECTIONS AT EACH END. FRAMES ARE DENOTED AS FOLLOWS:
A. MOMENT FRAME: (SLRS)
B. CONCENTRICALLY BRACED FRAME: (SLRS)
FOR SLRS SYSTEMS OR PARTS OF SYSTEMS THAT ARE NOT INCLUDED IN FRAMES, (SLRS) IS PLACED NEXT TO THE BEAM SIZE ON THE FRAMING PLAN (eg: ON A COLLECTOR ELEMENT (DRAG STRUT): MEMBER DESIGNATION (SLRS)

S9 ENCASED STEEL:
STANDARD SHAPE STRUCTURAL STEEL COMPLETELY ENCASED IN CONCRETE OR GROUT SHALL NOT BE GALVANIZED OR PAINTED AND SHALL HAVE A CLEAN SURFACE FOR BONDING TO CONCRETE OR GROUT WHEN IT IS PLACED.

S10 PAINTING:
STRUCTURAL STEEL SHALL BE PAINTED IN ACCORDANCE WITH SPECIFICATIONS.

S11 STAINLESS STEEL:
STAINLESS STEEL CONSTRUCTION SHALL BE IN ACCORDANCE WITH AISI SPECIFICATIONS. UNLESS OTHERWISE NOTED, STEEL IN CONTACT WITH SEWAGE SHALL BE AISI TYPE 316 STAINLESS STEEL. ALL STEEL WITHIN ONE FOOT HORIZONTALLY OR VERTICALLY OF SEWAGE SHALL BE STAINLESS STEEL. WHERE NOT SPECIFICALLY INDICATED ON DRAWINGS OR IN ABOVE NOTE, STAINLESS STEEL SHALL BE AISI TYPE 304.

S12 PROVIDE SPACER PLATES (STITCH PLATE) FOR DOUBLE ANGLE BRACINGS PER CBC 2013 REQUIREMENTS.

S13 ALL SHOP AND FIELD WELDS SHALL BE PREQUALIFIED WELDS. ANY WELDS BEYOND THE RANGE OR TOLERANCE OR REQUIREMENTS FOR PREQUALIFICATION SHALL BE QUALIFIED BY TEST PER AWS D1.1 SECTION 5 PART B. WELDS AT BASE METALS OVER 2" IN THICKNESS ARE NOT ALLOWED AS PREQUALIFIED WELD JOINTS WITHOUT TESTING.

S14 TO ASSURE THE PROPER AMPERAGE AND VOLTAGE OF THE WELDING PROCESS, THE USE OF A HAND HELD CALIBRATED AMP AND VOLT METER SHALL BE USED. THIS EQUIPMENT SHALL BE USED BY THE FABRICATOR, ERECTOR AND THE INSPECTORS. AMPERAGE AND VOLTAGE SHALL BE MEASURED NEAR THE ARC. TRAVEL SPEED AND ELECTRODE STICK OUT SHALL BE VERIFIED TO BE IN COMPLIANCE WITH THE APPROVED WPS.

S15 ALL COMPLETE JOINT PENETRATION (CP) GROOVE WELDS SHALL BE INSPECTED AND TESTED PER ENGINEER REQUIREMENTS.

S16 PREHEAT AND INTERPASS TEMPERATURES FOR THE LATERAL-FORCE-RESISTING ELEMENTS ONLY:

S16.1 THE PREHEAT TEMPERATURES AND CONDITIONS GIVEN IN A.W.S. D1.1-96, ANNEX XI, TABLE XI-2, SHOULD BE STRICTLY OBSERVED USING A MEDIUM RESTRAINT LEVEL AND A MINIMUM SUSCEPTIBILITY INDEX OF "D". EXCEPTION: PLATES 2" AND THICKER AND GROUP 4 AND 5 SHAPES SHALL BE PREHEATED TO 300 DEG. F.

S16.2 PREHEAT TEMPERATURES SHOULD BE MEASURED AT A DISTANCE FROM THE WELD EQUAL TO THE THICKNESS OF THE PART BEING WELDED, BUT NOT LESS THAN THREE INCHES, IN ANY DIRECTION INCLUDING THE THROUGH THICKNESS OF THE PIECE U.N.O. IN THE CONTRACT DOCUMENTS. WHERE PLATES ARE OF DIFFERENT THICKNESS, THE PRE-HEAT REQUIREMENT FOR THE THICKER PLATE SHALL GOVERN. MAINTENANCE OF THESE TEMPERATURES THROUGH THE EXECUTION OF THE WELD (I.E. THE INTERPASS TEMPERATURE) IS ESSENTIAL. MAXIMUM INTERPASS TEMPERATURES SHOULD BE LIMITED TO 550 DEGREES F FOR PRE-QUALIFIED W.P.S., FOR FRACTURE-CRITICAL APPLICATIONS. HIGHER INTERPASS TEMPERATURES COULD BE EMPLOYED IF THOSE HIGHER TEMPERATURE LIMITS ARE QUALIFIED BY TEST.

## STRUCTURAL STEEL (CONT)

S17. NON-DESTRUCTIVE TESTING OF WELDED CONNECTIONS SHALL BE PERFORMED AT BRACING CONNECTION FILLET WELDS AND AT ALL FULL OR PARTIAL PENETRATION GROOVE WELDS DESIGNATED TO BE A PART OF THE LATERAL FORCE-RESISTING-SYSTEM:

S17.1. WELDED CONNECTIONS SHALL BE TESTED BY NON-DESTRUCTIVE METHODS FOR COMPLIANCE WITH IBC SECTION 2249 J2 OR 2251 J2. ULTRASONIC TESTING SHALL BE IN ACCORDANCE WITH AWS D1.1M ASTM E94 AND E99. AND ASME SECTION V. THIS TESTING SHALL BE PERFORMED BY AN APPROVED TESTING LABORATORY.

S18. THE FOLLOWING SPECIAL REQUIREMENTS SHALL APPLY TO BEAM TO COLUMN CONNECTIONS WITH WELDED BEAM FLANGES DESIGNATED AS A PART OF THE LATERAL-FORCE-RESISTING SYSTEM:

S18.1. NO "WELD DAMS" ARE ALLOWED.
S18.2. BEAM FLANGE TO COLUMN WELDS SHALL BE MADE BEFORE BOLTS ARE TENSIONED.
S18.3. WELDING SEQUENCE: BOTH FLANGES SHALL BE WELDED PRIOR TO ANY SUPPLEMENTAL WELDING TO THE SHEAR TAB.
S18.4. RUN-OFF TABS PER A.W.S. D1.1 ARE REQUIRED FOR THE COMPLETE PENETRATION (C.P.) FLANGE GROVE WELDS. ALL WELDS ARE TO BE STARTED AND COMPLETED ON THE RUN-OFF TABS AS MUCH AS PRACTICABLE.
S18.5. RUN-OFF TABS SHALL BE REMOVED AND THE ENDS GROUND SMOOTH (I.E. NO PITS OR GOUGES, SUITABLE FOR MAGNETIC PARTICLE TESTING). BACK-UP BARS, IF USED, SHALL BE REMOVED AT ALL BEAM BOTTOM FLANGES, BACK-GOUGED AND BACK-WELDED. BACK-UP BARS AT TOP FLANGES MAY REMAIN.
S18.6. THE WELD ROOT SHALL BE INSPECTED AND TESTED PER A.W.S. REQUIREMENTS GIVEN IN CHAPTER 6. IF REJECTABLE INDICATIONS ARE FOUND, REMOVE BY BACK-GOUGING TO SOUND METAL.
S18.7. A FILLET WELD SHALL BE APPLIED TO REINFORCE THE JOINT. THE SIZE OF THE REINFORCING WELD SHALL BE EQUAL TO ONE QUARTER OF THE BEAM FLANGE THICKNESS (T), BUT NOT LESS THAN 1/4" NOR MORE THAN 3/8" PER NOTE J OF FIGURE 3.4 OF D1.1-96.
S18.8. WELDS FOR THE BOTTOM BEAM FLANGE TO THE COLUMN FLANGE SHALL BE AS FOLLOWS:
S18.8.1. THE ROOT PASS SHOULD NOT EXCEED A 1/4" IN LAYER THICKNESS.
S18.8.2. THE WELD SHALL BE INITIATED ON THE WELD TAB, WITH TRAVEL PROGRESSING TOWARD THE CENTER OF THE GIRDER FLANGE WIDTH. WHEN THIS APPROACH IS USED, THE WELDER SHOULD STOP WELD APPROXIMATELY 1" BEFORE THE BEAM WEB. IT IS NOT ADVISABLE TO LEAVE THE WELD CRATER DIRECTLY IN THE CENTER OF THE BEAM FLANGE WIDTH SINCE THIS WILL HINDER POST-WELD OPERATIONS.
S18.8.3. THE HALF LENGTH ROOT PASS SHALL BE THOROUGHLY CLEANED OF ALL SLAG.
S18.8.4. THE END OF THE HALF LENGTH ROOT PASS THAT IS NEAR THE CENTER OF THE BEAM FLANGE SHOULD BE VISUALLY INSPECTED TO ENSURE FUSION, SOUNDNESS, AND FREEDOM FROM SLAG INCLUSIONS AND EXCESSIVE POROSITY. THE RESULTING BEAD PROFILE SHOULD BE SUITABLE FOR OBTAINING FUSION BY THE SUBSEQUENT PASS TO BE INITIATED ON THE OPPOSITE SIDE OF THE GIRDER WEB. IF THE PROFILE IS NOT CONDUCIVE TO GOOD FUSION, THE START OF THE FIRST ROOT PASS SHOULD BE GROUND GOUGED, CHIPPED OR OTHERWISE PREPARED TO ENSURE ADEQUATE FUSION.
S18.8.5. THE SECOND HALF OF THE WELD JOINT SHALL HAVE THE ROOT PASS APPLIED BEFORE ANY OTHER WELD PASSES ARE PERFORMED. THE ARC SHOULD BE INITIATED AT THE END OF THE HALF LENGTH ROOT PASS THAT IS NEAR THE CENTER OF THE BEAM FLANGE, AND TRAVEL SHOULD PROGRESS TO THE OUTBOARD END OF THE JOINT, TERMINATING ON THE WELD TAB.
S18.8.6. EACH WELD LAYER SHALL BE COMPLETED ON BOTH SIDES OF THE JOINT BEFORE A NEW LAYER IS DEPOSITED.
S18.8.7. WELD TABS SHALL BE REMOVED AND GROUND FLUSH TO THE BEAM FLANGE.

## STEEL BAR JOIST:

SJ1. STEEL JOISTS ARE SHOWN CONCEPTUALLY ON THE DRAWINGS AND SHALL BE DESIGNED BY THE CONTRACTOR FOR THE LOADINGS INDICATED.

SJ2. STEEL JOISTS AND BRIDGING SHALL BE DESIGNED BY THE MANUFACTURER TO RESIST LOADS INDICATED ON ROOF PLAN.

SJ3. CONCENTRATED LOADS SHALL BE LOCATED WITHIN 4 INCHES OF A PANEL POINT OR SPECIAL REINFORCEMENT MUST BE ADDED.

SJ4. JOIST BRIDGING SHALL BE DESIGNED BY THE STEEL JOIST MANUFACTURER.

SJ5. ADJUST JOIST BRIDGING DESIGN AND DETAILING WHERE MECHANICAL DUCTS OR OTHER OBSTRUCTIONS RUN BETWEEN THE JOISTS.

## DEFERRED APPROVALS:

CONTRACTOR TO FURNISH, DESIGN, DETAIL, AND INSTALL STRUCTURAL COMPONENTS LISTED BELOW. INSTALLATION AND DESIGN SHALL BE IN CONFORMANCE WITH THE 2013 CALIFORNIA BUILDING CODE, OSHA REGULATIONS, DRAWINGS, AND SPECIFICATIONS. CALCULATIONS FOR ALL MEMBERS AND CONNECTIONS (INCLUDING ANCHOR BOLTS ATTACHING STRUCTURAL COMPONENTS TO THEIR FOUNDATIONS) MUST BE PREPARED, STAMPED AND SIGNED BY A REGISTERED CIVIL OR STRUCTURAL ENGINEER LICENSED IN THE STATE OF CALIFORNIA AND MUST BE SUBMITTED WITH SHOP DRAWINGS. SHOP DRAWINGS MUST BE STAMPED AND SIGNED BY THE REGISTERED CIVIL OR STRUCTURAL ENGINEER THAT PREPARES THE CALCULATIONS.

1) STEEL JOISTS
2) METAL STAIRS, LANDINGS, PLATFORMS AND THEIR SUPPORTS
3) GRATINGS INCLUDING PLANK GRATINGS, CHECKERED PLATES AND SUPPORTS
4) FRP LADDERS, COVER PANELS, BAFFLE WALLS AND FRAMING SUPPORTS
5) RAILINGS AND THEIR ANCHORAGE
6) PRECAST MANHOLES AND VAULTS
7) PROCESS/MECHANICAL EQUIPMENT ANCHORAGE
8) TEMPORARY AND PERMANENT SHEET PILE RETAINING WALLS
9) ALUMINUM CANOPY IN SOLID HANDLING BUILDING

NOT FOR CONSTRUCTION

FILE: 00S01.dwg
DATE: Jun 30, 2015 - 10:16:00am, nvallesp

HDR Engineering, Inc.

| ISSUE | DATE | DESCRIPTION |
|---|---|---|
| A | JUNE 2015 | ISSUED FOR BID |

| | |
|---|---|
| PROJECT MANAGER | C. OLSON |
| DESIGNED | O. TAVANGAR |
| DESIGNED | |
| CHECKED | O. TAVANGAR |
| DRAWN | D. ELDREDGE |
| DATE | JUNE 30, 2015 |
| PROJECT NUMBER | 215786 |

REGISTERED PROFESSIONAL ENGINEER — OMID TAVANGAR — NO. 54655 EXP. 12/31/15 — CIVIL — STATE OF CALIFORNIA — 6/30/15

CITY OF PINOLE CALIFORNIA 1903

PINOLE/HERCULES WATER POLLUTION CONTROL PLANT UPGRADE CLIENT PN

**STRUCTURAL**

**GENERAL STRUCTURAL NOTES - 1**

0 1" 2"

| | |
|---|---|
| FILENAME | 00S01 |
| SCALE | AS NOTED |

SHEET 00S01

## STEEL DECK:

SD1 THE DESIGN, FABRICATION, AND ERECTION OF METAL DECKING SHALL BE IN ACCORDANCE WITH THE CURRENT EDITION OF THE SDI SPECIFICATIONS AND THE SDI DIAPHRAGM MANUAL.

SD2 FOR SIZE, THICKENESS AND DETAILS OF STEEL ROOF DECK SEE TYPICAL METAL DECK DETAIL SHEET.

SD3 STEEL ROOF DECK IS TO BE A STRUCTURAL DIAPHRAGM AND SHALL BE FASTENED AS SHOWN ON THE DRAWINGS.

SD4 THE PLANS INDICATE DECK SPAN DIRECTION AND SHALL BE A THREE SPAN DECK MINIMUM.

SD5 SUSPENDED CEILINGS, LIGHT FIXTURES, DUCTS, AND OTHER UTILITIES SHALL NOT BE SUPPORTED FROM THE STEEL DECK, UNLESS COMPLIES WITH REQUIREMENTS OF HANGING LOADS AS OUTLINED BELOW.

## GUIDELINES FOR HANGING LOADS:

1. NO LOAD LARGER THAN 15# SHALL DIRECTLY HANG FROM ROOF METAL DECK.
2. CONTRACTOR TO PROVIDE SUPPLEMENTARY STRUCTURAL ELEMENTS TO HANG LOADS FROM ROOF STRUCTURE IN SUCH A WAY THAT AVERAGE HUNG LOADS DO NOT EXCEED 5 PSF.
3. ALL DIAGONALS BRACING FOR HUNG PIPES, ETC. SHALL BE CONNECTED TO TOP CHORD OF TRUSS JOISTS.

## LIGHT GAGE STEEL:

LG1 APPLICABLE CODE
STEEL CONSTRUCTION SHALL CONFORM TO SPECIFICATIONS AND STANDARDS PRESENTED IN THE LATEST EDITION OF AISI, SPECIFICATIONS FOR DESIGN OF COLD FORMED STEEL STRUCTURAL MEMBERS.

LG2 MATERIAL
ALL STRUCTURAL SHAPES, BARS, PLATES AND SHEETS INDICATED ON THE SHEETS SHALL BE STEEL MEETING ASTM A653 STAINLESS STEEL GRADE SPECIFICATIONS, UNLESS OTHERWISE NOTED. Fy = 40 KSI, MINIMUM.

LG3 WELDING
WELDING SHALL CONFORM AWS–D1.1 STRUCTURAL WELDING CODE STEEL, AND AWS–01.3 STRUCTURAL WELDING CODE – SHEET STEEL.

LG4 CONNECTIONS
1. MANUFACTURER RECOMMENDED SELF DRILLING SELF TAPPING SCREWS WITH CORROSION RESISTANT PLATED FINISH. FASTENERS SHALL BE SUFFICIENT SIZE AND NUMBER TO ENSURE THE STRENGTH OF THE CONNECTION.
2. WELDING: COMPLY WITH AWS D 1.1 WHEN APPLICABLE AND AWS D 1.3 FOR WELDING BASE METALS LESS THAN 1/8 INCH (3.2 MM) THICK.
3. OTHER FASTENERS AS ACCEPTED BY THE LIGHT GAGE STEEL ENGINEER.

LG5 PAINTING
LIGHT GAGE STEEL SHALL BE PAINTED OR GALVANIZED IN ACCORDANCE WITH SPECIFICATIONS.

## MASONRY:

M1 DESIGN STRENGTHS:
f'm= 1500 PSI
fy = 60,000 PSI

M2 GROUT FOR FILLING MASONRY CAVITIES TO BE COARSE GROUT UNO, MAXIMUM COARSE AGGREGATE SIZE IS 3/8 INCH.

M3 GROUT POURS SHALL NOT EXCEED 4 FEET IN HEIGHT UNLESS CLEANOUTS ARE PROVIDED IN THE BOTTOM COURSE OF THE CELL(S) TO BE GROUTED AND WRITTEN PERMISSION IS OBTAINED FOR HIGH LIFT GROUTING.

M4 RESTRICTED BAR ANCHORAGE:
IN CASES WHERE REINFORCING BARS CANNOT BE EXTENDED AS FAR AS REQUIRED, THE BARS SHALL EXTEND AS FAR AS POSSIBLE AND END IN STANDARD HOOK. SHOW ON SHOP DRAWINGS AND HIGHLIGHT WITH A BOX TO BRING TO ENGINEER'S ATTENTION.

M5 ANCHOR BOLTS:
ALL EXPANSION AND ADHESIVE ANCHORS SHALL HAVE THE ICC REPORT SHOWING EQUIVALENT LOAD CAPACITY. SUBMIT AND INSTALL PER THE ICC EVALUATION REPORT.

M6 IF BOND BEAMS AT INTERSECTING WALLS ARE SHOWN ON THE DRAWINGS TO MEET AT DIFFERENT ELEVATIONS, EXTEND REIFORCING OF BOTH BOND BEAMS AROUND INTERSECTING CORNER NOT LESS THAN 4 FEET IN EACH DIRECTION.

M7 LINTEL BLOCKS SHALL NOT BE USED AS BOND BEAM BLOCKS EXCEPT AT OPENINGS WHERE BOND BEAMS AND LINTELS COINCIDE.

M8 MINIMUM REINFORCEMENT:
SEE STANDARD BLOCKWALL DETAILS FOR REINFORCEMENT UNO ON PLANS. ALL BLOCKWALLS ARE OF BEARING TYPE.

M9 EXTRA REINFORCING IS REQUIRED AT OPENINGS, SEE STANDARD STRUCTURAL DETAILS

M10 ALL REINFORCING STEEL SHALL BE IN ACCORDANCE WITH ASTM A615, GRADE 60, DEFORMED BARS. USE A706 FOR WELDED REINFORCEMENT.

M11 ALL REINFORCING STEEL SHALL HAVE MINIMUM OF 1/2" GROUT COMPLETELY AROUND EACH REINFORCING BAR.

M12 MINIMUM LAP SPLICES SHALL BE PER SCHEDULE. 4 / 00S09

## CONSTRUCTION AT EXISTING STRUCTURES:

E1 SEE DEMOLITION SHEETS.

E2 IF EXISTING WATERSTOP AND/OR REINFORCING COUPLERS SHOWN IN DRAWINGS ARE DAMAGED, NOT USEABLE OR NOT FOUND, CONTRACTOR SHALL PROVIDE RETROFIT WATERSTOP BY DRILLED AND EPOXY REINFORCING.

E3 WHERE DRILL AND EPOXY REINFORCING OR ANCHORS ARE INSTALLED CONTRACTOR SHALL NOT DAMAGE EXISTING REINFORCING. IF REQUIRED CONTRACTOR SHALL HAVE EXISTING CONCRETE INVESTIGATED USING GROUND PENETRATING RADAR TO LOCATE EXISTING REINFORCING.

E4 EXISTING CONCRETE SURFACES TO BE JOINED WITH NEW CONCRETE SHALL BE THOROUGHLY CLEANED BY SAND BLASTING JUST PRIOR TO PLACEMENT OF NEW CONCRETE.

E5 WHERE EXISTING REINFORCING IS TO BE PRESERVED, CONTRACTOR SHALL STRAIGHTEN AND SAND BLAST REINFORCING JUST PRIOR TO PLACEMENT OF NEW CONCRETE.

E6 PRIOR TO DRILL & EPOXY BOLTS OR REBAR, LOCATE ALL EXISTING REINFORCEMENT. CARE SHALL BE TAKEN NOT TO DISTURB THE EXISTING REINFORCEMENT.

## HEADED STUDS AND DEFORMED BAR ANCHORS

1. HEADED STUDS AND DEFORMED BAR ANCHORS SHALL BE ELECTRIC–ARC STUD WELDED PER MANUFACTURER'S RECOMMENDATIONS AND THE AWS CODE. FILLET WELDING SHALL NOT BE ALLOWED WITHOUT APPROVAL OF THE SEOR. WELDMENT SHALL BE IN SUCH A MANNER AS TO PROVIDE COMPLETE FUSION BETWEEN THE END OF THE STUD AND THE PLATE. THERE SHOULD NO POROSITY OR EVIDENCE OF LACK OF FUSION BETWEEN THE WELDED END OF THE STUD AND THE PLATE. THE STUD WILL DECREASE IN LENGTH DURING WELDING APPROXIMATELY 1/8" FOR 5/8" DIAMETER AND SMALLER, AND 3/16" FOR 5/8" DIAMETER AND LARGER STUDS.
2. HEADED STUDS SHALL BE TYPE B PER THE AWS CODE WITH A MINIMUM YIELD STRENGTH OF 50 KSI.
3. HEADED STUDS SHALL BE NELSON GRANULAR FLUX FILLED.
4. ANY SUBSTITUTIONS OF THE ANCHORS ABOVE MUST BE APPROVED BY CONTRACTING OFFICER BY MEANS OF A CHANGE ORDER.
5. STUDS SHALL BE MANUFACTURED OF C–1015 COLD ROLLED STEEL CONFORMING TO ASTM A–108–58–T.
6. DEFORMED BAR ANCHORS SHALL COMPLY WITH ASTM A–108 AND A–496 WITH A MINIMUM YIELD STRENGTH OF 70 KSI.
7. UNLESS NOTED OTHERWISE, DEFORMED BAR ANCHOR LENGTHS SHALL BE AS FOLLOWS:

| BAR DIAMETER (IN) | EMBEDMENT (IN) |
|---|---|
| 3/8 | 24 |
| 1/2 | 24 |
| 5/8 | 30 |

FILE: 215786–00S02.dwg
DATE: Jun 30, 2015–8:34:46am, jwebb

HDR Engineering, Inc.

| ISSUE | DATE | DESCRIPTION |
|---|---|---|
| A | JUNE 2015 | ISSUED FOR BID |

| | |
|---|---|
| PROJECT MANAGER | C. OLSON |
| | |
| DESIGNED | O. TAVANGAR |
| DESIGNED | |
| CHECKED | O. TAVANGAR |
| DRAWN | D. ELDREDGE |
| DATE | JUNE 30, 2015 |
| | |
| PROJECT NUMBER | 215786 |

REGISTERED PROFESSIONAL ENGINEER
OMID TAVANGAR
NO. 54655
EXP. 12/31/15
CIVIL
STATE OF CALIFORNIA
6/30/15

CITY OF PINOLE CALIFORNIA 1903

PINOLE/HERCULES
WATER POLLUTION
CONTROL PLANT UPGRADE
CLIENT PN

**STRUCTURAL**

**GENERAL STRUCTURAL NOTES - 2**

0 1" 2"

| | |
|---|---|
| FILENAME | 215786–00S02 |
| SCALE | NTS |

SHEET **00S02**

# SCHEDULE OF SPECIAL INSPECTION SERVICES

| INSPECTION ITEM REQUIRED | FREQUENCY | | CODE REFERENCE | REMARKS |
|---|---|---|---|---|
| | CONTINUOUS | PERIODIC | | |
| **SOIL & EARTHWORK** | | | | |
| VERIFY MATERIALS BELOW SHALLOW FOUNDATIONS ARE ADEQUATE TO ACHIEVE THE DESIGN BEARING CAPACITY. | | ● | IBC 1705.6 | |
| VERIFY EXCAVATIONS ARE EXTENDED TO PROPER DEPTH AND HAVE REACHED PROPER MATERIAL. | | ● | | |
| PERFORM CLASSIFICATION AND TESTING OF COMPACTED FILL MATERIALS. | | ● | | |
| VERIFY USE OF PROPER MATERIALS, DENSITIES AND LIFT THICKNESSES DURING PLACEMENT AND COMPACTION OF COMPACTED FILL. | ● | | | |
| PRIOR TO PLACEMENT OF COMPACTED FILL, OBSERVE SUBGRADE AND VERIFY THAT SITE HAS BEEN PREPARED PROPERLY. | | ● | | |
| OBSERVE, TEST AS NEEDED, AND APPROVE FOOTING BEARING PRIOR TO PLACING OF REINFORCING STEEL AND CONCRETE. | | ● | | |
| **CONCRETE & REINFORCING STEEL** | | | | |
| INSPECTION OF REINFORCING STEEL, INCLUDING PRESTRESSING TENDONS, AND PLACEMENT. | | ● | ACI 318: 3.5, 7.1–7.7 IBC 1910.4 | |
| INSPECTION OF REINFORCING STEEL WELDING IN ACCORDANCE WITH IBC TABLE 1705.2.2, ITEM 2B. | | | AWS D1.4 ACI 318: 3.5.2 | |
| INSPECTION OF ANCHORS CAST IN CONCRETE WHERE ALLOWABLE LOADS HAVE BEEN INCREASED OR WHERE STRENGTH DESIGN IS USED. | | ● | ACI 318: 8.1.3, 21.2.8, IBC 1908.5, 1909.1 | |
| INSPECTION OF ANCHORS POST–INSTALLED IN HARDENED CONCRETE MEMBERS. | | ● | ACI 318: 3.8.6, 8.1.3, 21.2.8, IBC 1909.1 | PER ICC REPORT |
| VERIFY USE OF CORRECT CONCRETE MIX DESIGN AND REVIEW DELIVERY TICKETS | | ● | ACI 318: CH. 4, 5.2–5.4 IBC 1904.2, 1910.2, 1910.3 | |
| AT THE TIME FRESH CONCRETE IS SAMPLED TO FABRICATE SPECIMENS FOR STRENGTH TESTS, PERFORM SLUMP AND AIR CONTENT TESTS, AND DETERMINE THE TEMPERATURE OF THE CONCRETE. | ● | | ASTM C 172 ASTM C 31 ACI 318: 5.6, 5.8 IBC 1910.10 | ADDITIONAL CYLINDERS SHALL BE MADE AS NEEDED FOR EARLY FORM REMOVAL. NOTE: TWO CYLINDERS ARE REQUIRED FOR AN ACCEPTABLE TEST. A SINGLE CYLINDER BREAK IS UNACCEPTABLE FOR STRENGTH EVALUATION PURPOSES. |
| TAKE CONCRETE SPECIMENS FOR STRENGTH TESTS TO BE PERFORMED IN LAB. A MINIMUM OF FOUR (4) CYLINDERS SHALL BE MADE. TEST ONE AT SEVEN DAYS AND TWO AT 28–DAYS. THE 4TH CYLINDER SHALL BE TESTED AT 28 DAYS IF ONE OR BOTH OF THE 28–DAY CYLINDER RESULTS ARE BELOW REQUIRED STRENGTH. | ● | | IBC 1704.4 | |
| PERFORM CONCRETE STRENGTH TESTING IN LAB | | ● | | |
| MAINTAIN A SPREADSHEET SHOWING DATE, SEQUENTIAL ORDER OF STRENGTH TEST RESULTS AND INDICATE RUNNING AVERAGE | ● | | ACI 318 PAR. 5.6.3.3 | |
| MEASURE FLOOR FLATNESS AND LEVELNESS AS NEEDED WHEN QUESTIONABLE SURFACES ARE OBSERVED. | | ● | | |
| POST INSTALLED ANCHORS EPOXY INSTALLED REINFORCING | ● | | | PER ICC REPORT |
| INSPECTION OF CONCRETE AND SHOTCRETE PLACEMENT FOR PROPER APPLICATION TECHNIQUES. | ● | | ACI 318: 5.9, 5.10 IBC 1910.6, 1910.7, 1910.8 | |
| INSPECTION FOR MAINTENANCE OF SPECIFIED CURING TEMPERATURE AND TECHNIQUES. | | ● | ACI 318: 5.11–5.13 IBC 1910.9 | |
| INSPECTION OF PRESTRESSED CONCRETE: | | | ACI 318: 18.20 ACI 318: 18.18.4 | |
| A. APPLICATION OF PRESSTRESSING FORCES. | ● | | | |
| B. GROUTING OF BONDED PRESTRESSING TENDONS IN THE SEISMIC FORCE–RESISTING SYSTEM. | ● | | | |
| ERECTION OF PRECAST CONCRETE MEMBERS. | | ● | ACI 318: CH. 16 | |
| VERIFICATION OF IN–SITU CONCRETE STRENGTH, PRIOR TO STRESSING OF TENDONS IN POST–TENSIONED CONCRETE AND PRIOR TO REMOVAL OF SHORES AND FORMS FROM BEAMS AND STRUCTURAL SLABS. | | ● | ACI 318: 6.2 | |
| INSPECT FORMWORK FOR SHAPE, LOCATION AND DIMENSIONS OF THE CONCRETE MEMBER BEING FORMED. | | ● | ACI 318: 6.1.1 | |

## TESTING AND INSPECTION FOR QUALITY ASSURANCE

THE OWNER SHALL EMPLOY QUALIFIED SPECIAL INSPECTORS TO PERFORM INSPECTIONS IN ACCORDANCE WITH THE BUILDING CODE. INSPECTORS SHALL PERFORM ALL DUTIES AND RESPONSIBILITIES AS REQUIRED BY THE BUILDING CODE.

THE SCHEDULE CONTAINS A LIST OF SPECIAL INSPECTION ACTIVITIES RELATED TO THE QUALITY ASSURANCE PLAN REQUIRED BY THE BUILDING CODE (CBC CHAPTER 17) FOR THE FABRICATION, ERECTION AND CONSTRUCTION OF THE STRUCTURAL SYSTEMS AS GIVEN IN THE SPECIFICATIONS AND DRAWINGS OF THE PROJECT. ALL INSPECTORS SHALL BE QUALIFIED BY TRAINING AND EXPERIENCE FOR THE REQUIRED INSPECTIONS AND TEST PROCEDURES. REFER TO CBC CHAPTER 17 "STRUCTURAL TESTS AND SPECIAL INSPECTIONS", FOR SPECIFIC TEST PROCEED.

TESTING AND INSPECTION REPORTS SHALL BE PREPARED FOR EACH INSPECTION ITEM ON A DAILY BASIS WHENEVER WORK IS PERFORMED ON THAT ITEM. REPORTS SHALL BE DISTRIBUTED TO OWNER, CONTRACTOR, BUILDING OFFICIAL (IF REQUESTED), AND ENGINEER FOR THEIR REVIEW, COMMENT, AND ACTION, AS NEEDED.

# SCHEDULE OF SPECIAL INSPECTION SERVICES (CONT)

| INSPECTION ITEM REQUIRED | FREQUENCY | | CODE REFERENCE | REMARKS |
|---|---|---|---|---|
| | CONTINUOUS/P* | PERIODIC/O* | | |
| **STRUCTURAL STEEL** | | | | |
| VERIFY FABRICATOR CERTIFICATION | | ● | IBC 1704.2 | |
| VERIFY CORRECT STRUCTURAL STEEL MATERIAL DELIVERED TO JOB SITE | | ● | IBC 1708.4 | VERIFY IDENTIFICATION MARKINGS |
| MANUFACTURERS' CERTIFIED MILL TEST REPORTS | | ● | IBC 1708.4 | |
| INSPECTION OF WELDING: COMPLETE AND PARTIAL PENETRATION GROOVE WELDS, MULTIPASS FILLET WELDS, SIGNLE–PASS FILLET WELDS ≥ 5/16" | ● | | IBC 1704.3.1 | AWS D1.1 |
| INSPECTION OF WELDING: COMPLETE AND PARTIAL PENETRATION GROOVE WELDS, MULTIPASS FILLET WELDS, SIGNLE–PASS FILLET WELDS ≤ 5/16" | | ● | IBC 1704.3.1 | AWS D1.1 |
| VERIFY CORRECT MATERIAL USED HIGH–STRENGTH BOLTS, NUTS, AND WASHERS | | ● | AISC LRFD A3.3 | |
| OBSERVE & CHECK TORQUE OF ALL BOLTS IN SLIP–CRITICAL CONNECTIONS | ● | | IBC 1704.3.3; AISC LRFD M2.5 | |
| INSPECTION OF FABRICATED ITEMS | | ● | AISC 360 N5.2 | VERIFY IDENTIFICATION MARKINGS |
| REVIEW OF MATERIAL TEST REPORTS AND CERTIFICATIONS FOR COMPLIANCE WITH CONSTRUCTION DOCUMENTS. | ● | | AISC 360 N3.2, N5.2 | |
| INSPECTION PRIOR TO WELDING: | | | | |
| A. WELDING PROCEDURE SPECIFICATIONS AVAILABLE | | ● | AISC 341 J6.1 AISC 360 N5.4, AWS D1.1 | |
| B. MANUFACTURER CERTIFICATIONS FOR WELDING CONSUMABLES AVAILABLE | | ● | | |
| C. MATERIAL IDENTIFICATION (TYPE/GRADE) | ● | | | |
| D. WELDER IDENTIFICATION SYSTEM | ● | | | |
| E. FIT–UP OF GROOVE WELDS (INCLUDING JOINT GEOMETRY) | ● | | | |
| F. CONFIGURATION AND FINISH OF ACCESS HOLES | ● | | | |
| G. FIT–UP OF FILLET WELDS | ● | | | |
| INSPECTION DURING WELDING: | | | | |
| A. USE OF QUALIFIED WELDERS | ● | | AISC 341 J6.1, AISC 360 N5.4, AWS D1.1 | |
| B. CONTROL AND HANDLING OF WELDING CONSUMABLES | ● | | | |
| C. NO WELDING OVER CRACKED TACK WELDS | ● | | | |
| D. ENVIRONMENTAL CONDITIONS | ● | | | |
| E. WPS FOLLOWED | ● | | | |
| F. WELDING TECHNIQUES | ● | | | |
| INSPECTION AFTER WELDING: | | | | |
| A. WELDS CLEANED | | ● | AISC 341 J6.1, AISC 360 N5.4, AWS D1.1 | |
| B. SIZE, LENGTH AND LOCATION OF WELDS | ● | | | |
| C. WELDS MEET VISUAL ACCEPTANCE CRITERIA | ● | | | |
| D. ARC STRIKES | ● | | | |
| E. K–AREA | ● | | | |
| F. BACKING REMOVED AND WELD TABS REMOVED (IF REQUIRED) | ● | | | |
| G. REPAIR ACTIVITIES | ● | | | |
| H. DOCUMENT ACCEPTANCE OR REJECTION OF WELDED JOINT OR MEMBER | ● | | | |
| INSPECTION PRIOR TO HIGH–STRENGTH BOLTING: | | | | |
| A. MANUFACTURER'S CERTIFICATIONS AVAILABLE FOR FASTENER MATERIALS | ● | | AISC 341 J7, AISC 360 N5.6 | |
| B. FASTENERS MARKED IN ACCORDANCE WITH ASTM REQUIREMENTS | | ● | | |
| C. PROPER FASTENERS SELECTED FOR THE JOINT DETAIL (GRADE, TYPE, BOLT LENGTH IF THREADS ARE TO BE EXCLUDED FROM SHEAR PLANE) | | ● | | |
| D. PROPER BOLTING PROCEDURE SELECTED FOR JOINT DETAIL | | ● | | |
| E. CONNECTING ELEMENTS, INCLUDING THE APPROPRIATE FAYING SURFACE CONDITION AND HOLE PREPARATION, IF SPECIFIED, MEET APPLICABLE REQUIREMENTS. | | ● | | |
| F. PRE–INSTALLATION VERIFICATION TESTING BY INSTALLATION PERSONNEL OBSERVED AND DOCUMENTED FOR FASTENER ASSEMBLIES AND METHODS USED | | ● | | |
| G. PROPER STORAGE PROVIDED FOR BOLTS, NUTS, WASHERS AND OTHER FASTENER COMPONENTS | | ● | | |

* P – PERFORM THESE TASKS FOR EACH WELDED JOINT, BOLTED CONNECTION, OR STEEL ELEMENT.
* O – OBSERVE THESE ITEMS ON A RANDOM BASIS. OPERATIONS NEED NOT BE DELAYED PENDING THESE INSPECTION.

FILE: 215786–00S03.dwg
DATE: Jun 30, 2015–8:34:49am, jwebb

HDR Engineering, Inc.

| ISSUE | DATE | DESCRIPTION |
|---|---|---|
| A | JUNE 2015 | ISSUED FOR BID |

| | |
|---|---|
| PROJECT MANAGER | C. OLSON |
| DESIGNED | O. TAVANGAR |
| DESIGNED | |
| CHECKED | O. TAVANGAR |
| DRAWN | D. ELDREDGE |
| DATE | JUNE 30, 2015 |
| PROJECT NUMBER | 215786 |

REGISTERED PROFESSIONAL ENGINEER OMID TAVANGAR R9– 54655 EXP. 12/31/15 CIVIL STATE OF CALIFORNIA 6/30/15

CITY OF PINOLE CALIFORNIA 1903

PINOLE/HERCULES
WATER POLLUTION
CONTROL PLANT UPGRADE
CLIENT PN

**STRUCTURAL**

**SPECIAL INSPECTIONS - 1**

0 1" 2"

| | |
|---|---|
| FILENAME | 215786–00S03 |
| SCALE | NTS |

SHEET **00S03**

## SCHEDULE OF SPECIAL INSPECTION SERVICES (CONT)

| INSPECTION ITEM REQUIRED | FREQUENCY: CONTINUOUS/P* FOR STRUCTURAL STEEL | FREQUENCY: PERIODIC/O* FOR STRUCTURAL STEEL | CODE REFERENCE | REMARKS |
|---|---|---|---|---|
| INSPECTION DURING HIGH–STRENGTH BOLTING: | | | | |
| A. FASTENER ASSEMBLIES, OF SUITABLE CONDITION, PLACED IN ALL HOLES AND WASHERS (IF REQUIRED) ARE POSITIONED AS REQUIRED | | ● | AISC 341 J7, AISC 360 N5.6 | |
| B. JOINT BROUGHT TO THE SNUG–TIGHT CONDITION PRIOR TO THE PRETENSIONING OPERATION | | ● | | |
| C. FASTENER COMPONENT NOT TURNED BY THE WRENCH PREVENTED FROM ROTATING | | ● | | |
| D. FASTENERS ARE PRETENSIONED IN ACCORDANCE WITH THE RCSC SPECTICATION, PROGRESSING SYSTEMATICALLY FROM THE MOST RIGID POINT TOWARD THE FREE EDGES | | ● | | |
| INSPECTION AFTER HIGH–STRENGTH BOLTING: | | | | |
| A. DOCUMENT ACCEPTANCE OR REJECTION OF BOLTED CONNECTIONS | ● | | AISC 360 N5.6 | |
| INSPECTION OF COMPOSITE STRUCTURES PRIOR TO CONCRETE PLACEMENT | | | | |
| A. MATERIAL IDENTIFICATION OF REINFORCING STEEL (TYPE/GRADE) | | ● | AISC 341 J9 | |
| B. DETERMINATION OF CARBON EQUIVALENT FOR REINFORCING STEEL OTHER THAN ASTM A706 | | ● | | |
| C. PROPER REINFORCING STEEL SIZE, SPACING AND ORIENTATION | | ● | | |
| D. REINFORCING STEEL HAS NOT BEEN REBENT IN THE FIELD | | ● | | |
| E. REINFORCING STEEL HAS BEEN TIED AND SUPPORTED AS REQUIRED | | ● | | |
| F. REQUIRED REINFORCING STEEL CLEARANCES HAVE BEEN PROVIDED | | ● | | |
| G. COMPOSITE MEMBER HAS REQUIRED SIZE | | ● | | |
| H. PLACEMENT AND INSTALLATION OF STEEL DECK | ● | | AISC 360 N6 | |
| I. PLACEMENT AND INSTALLATION OF STEEL HEADED STUD ANCHORS | ● | | | |
| J. DOCUMENT ACCEPTANCE OR REJECTION OF STEEL ELEMENTS | ● | | | |
| INSPECTION OF COMPOSITE STRUCTURES DURING CONCRETE PLACEMENT | | | | |
| A. CONCRETE: MATERIAL IDENTIFICATION (MIX DESIGN, COMPRESSIVE STRENGTH, MAXIMUM LARGE AGGREGATE SIZE, MAXIMUM SLUMP) | | ● | AISC 341 J9 | |
| B. LIMITS ON WATER ADDED AT THE TRUCK OR PUMP | | ● | AISC 341 J9 | |
| C. PROPER PLACEMENT TECHNIQUES TO LIMIT SEGREGATION | | ● | AISC 341 J9 | |
| INSPECTION OF COMPOSITE STRUCTURES AFTER CONCRETE PLACEMENT | | | | |
| A. ACHIEVEMENT OF MINIMUM SPECIFIED CONCRETE COMPRESSIVE STRENGTH AT SPECIFIED AGE | | ● | AISC 341 J9 | |
| **STEEL CONSTRUCTION OTHER THAN STRUCTURAL STEEL** | | | | |
| MATERIAL VERIFICATION OF COLD–FORMED STEEL DECK: | | | | |
| A. IDENTIFICATION MARKINGS TO CONFORM TO ASTM STANDARDS SPECIFIED IN THE APPROVED CONSTRUCTION DOCUMENTS | | ● | APPLICABLE ASTM MATERIAL STANDARDS | |
| B. MANUFACTURERE'S CERTIFIED TEST REPORTS | | ● | | |
| INSPECTION OF WELDING: | | | | |
| A. COLD–FORMED STEEL DECK: | | | | |
| 1) FLOOR AND ROOF DECK WELDS | | ● | AWS D1.3 | |
| B. REINFORCING STEEL: | | | | |
| 1) VERIFICATION OF WELDABILITY OF REINFORCING STEEL OTHER THAN ASTM A 706. | | ● | AWS D1.4, ACI 318: SEC. 3.5.2 | |
| 2) REINFORCING STEEL RESISTING FLEXURAL AND AXIAL FORCES IN INTERMEDIATE AND SPECIAL MOMENT FRAMES, AND BOUNDARY ELEMENTS OF SPECIAL STRUCTURAL WALLS OF CONCRETE AND SHEAR REINFORCEMENT | ● | | | |
| 3) SHEAR REINFORCEMENT | ● | | | |
| 4) OTHER REINFORCING STEEL | | ● | | |
| **GENERAL STRUCTURAL OBSERVATIONS** | | | | |
| CONDUCT WEEKLY VISUAL OBSERVATION OF THE STRUCTURAL SYSTEMS FOR GENERAL CONFORMANCE TO THE CONSTRUCTION DOCUMENTS. PREPARE WEEKLY REPORT OF OBSERVATIONS DESCRIBING WORK PROGRESS AND NON–CONFORMING ITEMS. | | ● | | |
| **SPECIAL INSPECTIONS FOR SEISMIC RESISTANCE** | | | | |
| STRUCTURAL STEEL | | | IBC 1705.11.1, AISC 341 CHAP.J | |

* P – PERFORM THESE TASKS FOR EACH WELDED JOINT, BOLTED CONNECTION, OR STEEL ELEMENT.

* O – OBSERVE THESE ITEMS ON A RANDOM BASIS. OPERATIONS NEED NOT BE DELAYED PENDING THESE INSPECTION.

## SCHEDULE OF SPECIAL INSPECTION SERVICES (CONT)

| INSPECTION ITEM REQUIRED | FREQUENCY: CONTINUOUS | FREQUENCY: PERIODIC | CODE REFERENCE | REMARKS |
|---|---|---|---|---|
| COLD–FORMED STEEL LIGHT–FRAME CONSTRUCTION | | | | |
| A. INSPECT WELDING OPERATIONS OF ELEMENTS OF THE SEISMIC FORCE–RESISTING SYSTEM | | ● | IBC 1705.11.3 | |
| B. INSPECT SCREW ATTACHMENT, BOLTING, ANCHORING AND OTHER FASTENING OF COMPONENTS WITHIN THE SEISMIC FORCE–RESISTING SYSTEM | | ● | | |
| DESIGNATED SEISMIC SYSTEMS | | | | |
| A. EXAMINE DESIGNATED SEISMIC SYSTEMS REQUIRING SEISMIC QUALIFICATION AND VERIFY THAT THE LABEL, ANCHORAGE OR MOUNTING CONFORMS TO THE CERTIFICATE OF COMPLIANCE | ● | | IBC 1705.11.4, 1705.12.3 | |
| ARCHITECTURAL COMPONENTS | | | | |
| A. INSPECT ERECTION AND FASTENING OF EXTERIOR CLADDING, INTERIOR AND EXTERIOR NONBEARING WALLS AND INTERIOR AND EXTERIOR VENEER | | ● | IBC 1705.11.5 | |
| MECHANICAL AND ELECTRICAL COMPONENTS | | | | |
| A. INSPECT ANCHORAGE OF ELECTRICAL EQUIPMENT | | ● | IBC 1705.11.6 | |
| B. INSPECT INSTALLATION AND ANCHORAGE OF PIPING SYSTEMS, DUCTWORK AND THEIR ASSOCIATED MECHANICAL UNITS DESIGNED TO CARRY HAZARDOUS MATERIALS | | ● | | |
| C. INSPECT INSTALLATION AND ANCHORAGE OF VIBRATION ISOLATION SYSTEMS WHERE THE CONSTRUCTION DOCUMENTS REQUIRE A NOMINAL CLEARANCE OF ¼ IN OR LESS BETWEEN THE EQUIPMENT SUPPORT FRAME AND RESTRAINT | | ● | | |
| STORAGE RACKS | | | | |
| A. INSPECT ANCHORAGE OF STORAGE RACKS 8 FT OR GREATER IN HEIGHT | | ● | IBC 1705.11.7 | |
| SEISMIC ISOLATION SYSTEMS | | | | |
| A. INSPECT FABRICATION AND INSTALLATION OF ISOLATOR UNITS AND ENERGY DISSIPATION DEVICES | | ● | IBC 1705.11.8 | PER ICC REPORT |
| **MASONRY CONSTRUCTION** | | | | |
| VERIFY COMPLIANCE WITH THE APPROVED SUBMITTALS | | ● | ACI 530.1 ART. 1.5 | |
| AS MASONRY CONSTRUCTION BEGINS, VERIFTY THAT THE FOLLOWING ARE IN COMPLIANCE: | | | | |
| A. PROPORTIONS OF SITE–PREPARED MORTAR | | ● | ACI 530.1 ART. 2.1, 2.6 A | |
| B. CONSTRUCTION OF MORTAR JOINTS | | ● | ACI 530.1 ART. 3.3 B | |
| C. GRADE AND SIZE OF PRESTRESSING TENDONS AND ANCHORAGES | | ● | ACI 530.1 ART. 2.4 B, 2.4 H | |
| D. LOCATION OF REINFORCEMENT, CONNECTORS, AND PRESTRESSING TENDONS AND ANCHORAGES | | ● | ACI 530.1 ART. 3.4, 3.6 A | |
| E. PRESTRESSING TECHNIQUE | | ● | ACI 530.1 ART. 3.6 B | |
| PRIOR TO GROUTING, VERIFY THAT THE FOLLOWING ARE IN COMPLIANCE: | | | | |
| A. GROUT SPACE | | ● | ACI 530.1 ART. 3.2 D, 3.2 F | |
| B. GRADE, TYPE, AND SIZE OF REINFORCEMENT AND ANCHOR BOLTS, AND PRESTRESSING TENDONS AND ANCHORAGES | | ● | ACI 530 SEC. 1.16, ACI 530.1 ART. 2.4, 3.4 | |
| C. PLACEMENT OF REINFORCEMENT, CONNECTORS, AND PRESTRESSING TENDONS AND ANCHORAGES | | ● | ACI 530 SEC. 1.16, ACI 530.1 ART. 3.2 E, 3.4, 3.6 A | |
| D. PROPORTIONS OF SITE–PREPARED GROUT AND PRESTRESSING GROUT FOR BONDED TENDONS | | ● | ACI 530.1 ART. 2.6 B, 2.4 G.1.B | |
| E. CONSTRUCTION OF MORTAR JOINTS | | ● | ACI 530.1 ART. 3.3 B | |
| VERIFY DURING CONSTRUCTION: | | | | |
| A. SIZE AND LOCATION OF STRUCTURAL ELEMENTS | | ● | ACI 530.1 ART. 3.3 F | |
| B. TYPE, SIZE, AND LOCATION OF ANCHORS, INCLUDING OTHER DETAILS OF ANCHORAGE OF MASONRY TO STRUCTURAL MEMBERS, FRAMES, OR OTHER CONSTRUCTION | | ● | ACI 530 SEC. 1.16.4.3, 1.17.1 | |
| C. WELDING OF REINFORCEMENT | ● | | ACI 530 SEC. 2.1.7.7.2, 3.3.3.4 (C), 8.3.3.4 (B) | |
| D. PREPARATION, CONSTRUCTION, AND PROTECTION OF MASONRY DURING COLD WEATHER (TEMPERATURE BELOW 40 DEG F OR HOT WEATHER (TEMPERATURE ABOVE 90 DEG F | | ● | ACI 530.1 ART. 1.8 C, 1.8 D | |
| E. APPLICATION AND MEASUREMENT OF PRESTRESSING FORCE | ● | | ACI 530.1 ART. 3.6 B | |
| F. PLACEMENT OF GROUT AND PRESTRESSING GROUT FOR BONDED TENDONS IS IN COMPLIANCE | ● | | ACI 530.1 ART. 3.5, 3.6 C | |
| OBSERVE PREPARATION OF GROUT SPECIMENS, MORTAR SPECIMENS, AND/OR PRISMS | | ● | ACI 530.1 ART. 1.4 B.2.A.3, 1.4 B.2.B.3, 1.4 B.2.C.3, 1.4 B.3, 1.4 B.4 | |

FILE: 215786–00S04.dwg
DATE: Jun 30, 2015–8:34:52am, jwebb

HDR Engineering, Inc.

| ISSUE | DATE | DESCRIPTION |
|---|---|---|
| A | JUNE 2015 | ISSUED FOR BID |

| | |
|---|---|
| PROJECT MANAGER | C. OLSON |
| | |
| DESIGNED | O. TAVANGAR |
| DESIGNED | |
| CHECKED | O. TAVANGAR |
| DRAWN | D. ELDREDGE |
| DATE | JUNE 30, 2015 |
| | |
| PROJECT NUMBER | 215786 |

REGISTERED PROFESSIONAL ENGINEER — OMID TAVANGAR — NO. 54655 EXP. 12/31/15 — CIVIL — STATE OF CALIFORNIA — 6/30/15

CITY OF PINOLE CALIFORNIA — 1903

PINOLE/HERCULES
WATER POLLUTION
CONTROL PLANT UPGRADE
CLIENT PN

**STRUCTURAL**

**SPECIAL INSPECTIONS - 2**

0 1" 2"

| | |
|---|---|
| FILENAME | 215786–00S04 |
| SCALE | NTS |

SHEET **00S04**

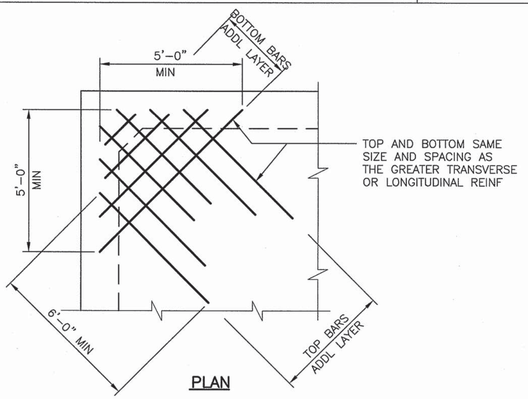


## SLAB CORNER

1

NTS

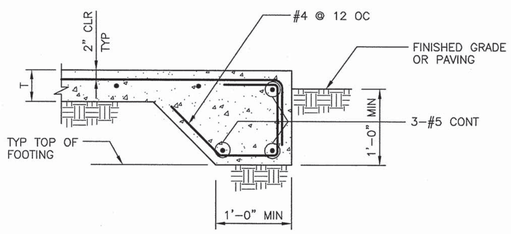


## SLAB EDGE

2

NTS

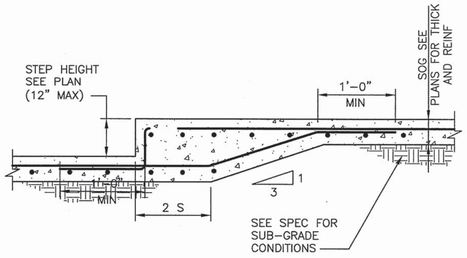


## SLAB-ON-GRADE DEPRESSION (FOR ONE LAYER OF REBAR)

3

NTS

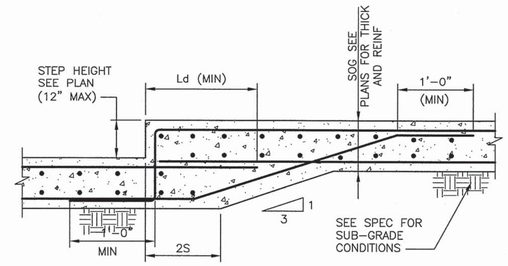


## SLAB-ON-GRADE DEPRESSION (FOR TWO LAYERS OF REBAR)

4

NTS

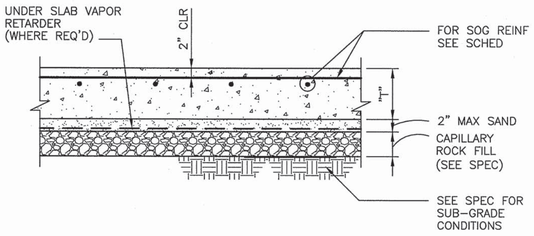


| THICK "T" | REINFORCMENT |
|---|---|
| 6" | #4 @ 12" EA WAY O.C. |
| 8" | #5 @ 12" EA WAY O.C. |
| 12" | #5 @ 12" EA WAY T&B |
| 1-2" | #5 @ 12" EA WAY T&B |

NOTE:
ELIMINATE 2" LAYER OF SAND WHERE UNDER SLAB VAPOR RETARDER IS NOT REQUIRED.

## BUILDING SLAB-ON-GRADE

5

NTS

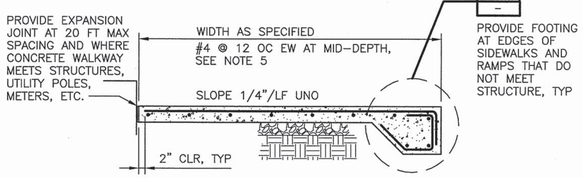


NOTES:

1. PROVIDE BROOM FINISH UNO PER THE REQUIREMENTS OF SPEC SECTION 03348.
2. PROVIDE TOOLED JOINTS AT 5 FOOT CENTERS IN PERPENDICULAR DIRECTIONS.
3. PROVIDE 6" GRANULAR FILL UNDER CONCRETE SIDEWALKS AND LANDINGS, UNLESS OTHERWISE NOTED.
4. PROVIDE 12" GRANULAR FILL UNDER CONCRETE PAVEMENT AND RAMPS.
5. #5 @ 8" OC EW AT MID-DEPTH AT CONCRETE PAVEMENT AND RAMPS.
6. 8" THICKNESS AT CONCRETE PAVEMENT AND RAMPS.

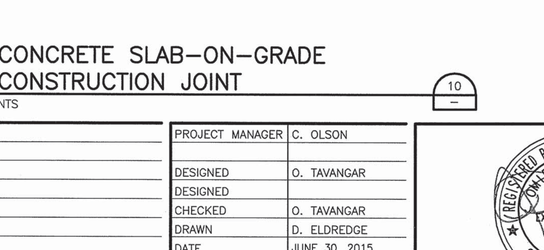


NOTES:

1. SAWCUT TO SUBDIVIDE S.O.G. TO AREAS OF 250 SQUARE FEET OR LESS. AREAS TO BE SQUARE OR APPROXIMATELY SQUARE.
2. SAWCUT AS SOON AS CONCRETE IS FIRM ENOUGH TO WALK ON BUT NO LATER THAN 24 HOURS AFTER POURING.

## STRUCTURE SLAB-ON-GRADE CONTROL JOINT

6

NTS

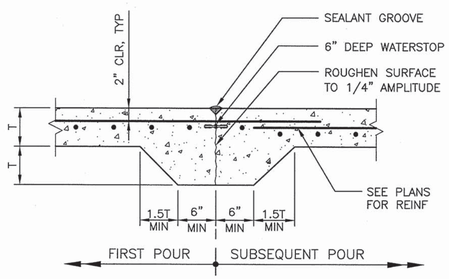


NOTE:
CONTRACTOR TO SUBMIT PROPOSED CONSTRUCTION JOINT LAYOUT (IF DIFFERENT FROM SHOWN ON FLOOR PLAN), FOR REVIEW AND APPROVAL BY ENGINEER OF RECORD PRIOR TO PLACING CONCRETE.

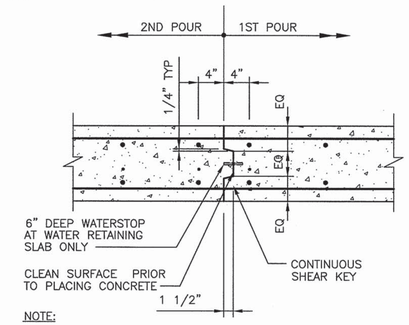


NOTE:
PROVIDE CONSTRUCTION JOINTS. CONTRACTOR SHALL SUBMIT LOCATION FOR REVIEW AND APPROVAL PRIOR TO CONCRETE POUR IF DIFFERENT FROM SHOWN ON PLANS.

## SUSPENDED SLAB CONSTRUCTION JOINT

7

NTS

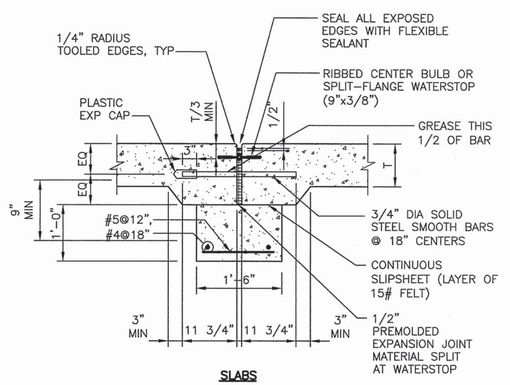


## HOUSEKEEPING PAD

8

NTS

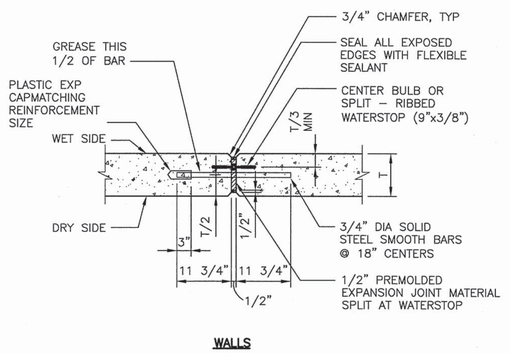


## CONCRETE SIDEWALK AND RAMP

9

NTS

## CONCRETE SLAB-ON-GRADE CONSTRUCTION JOINT

10

NTS

## EXPANSION JOINT

11

NTS

FILE: 00S05.dwg
DATE: Jun 30, 2015 - 8:34:43am, jwebb

HDR Engineering, Inc.

| ISSUE | DATE | DESCRIPTION |
|---|---|---|
| A | JUNE 2015 | ISSUED FOR BID |

| | |
|---|---|
| PROJECT MANAGER | C. OLSON |
| | |
| DESIGNED | O. TAVANGAR |
| DESIGNED | |
| CHECKED | O. TAVANGAR |
| DRAWN | D. ELDREDGE |
| DATE | JUNE 30, 2015 |
| | |
| PROJECT NUMBER | 215786 |

REGISTERED PROFESSIONAL ENGINEER — OMID TAVANGAR — NO. 54655 EXP. 12/31/15 — CIVIL — STATE OF CALIFORNIA — 6/30/15

CITY OF PINOLE CALIFORNIA — 1903

PINOLE/HERCULES
WATER POLLUTION
CONTROL PLANT UPGRADE
CLIENT PN

**STRUCTURAL**

**TYPICAL CONCRETE DETAILS - I**

0 1" 2"

| | |
|---|---|
| FILENAME | 00S05 |
| SCALE | AS NOTED |

SHEET **00S05**

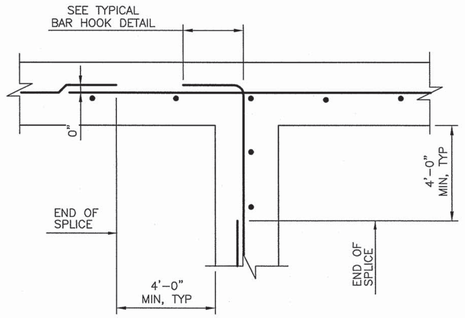


SINGLE-LAYER INTERSECTION

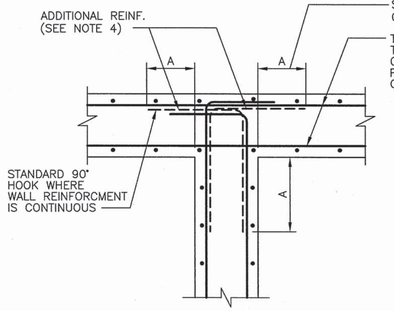


DOUBLE-LAYER INTERSECTION

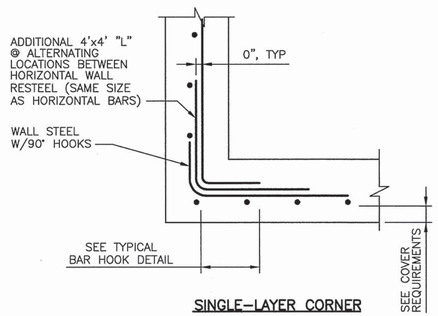


SINGLE-LAYER CORNER

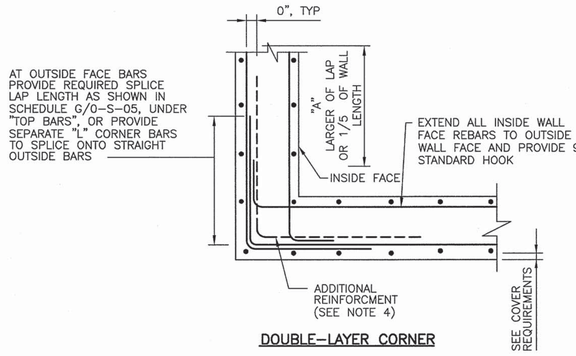


DOUBLE-LAYER CORNER

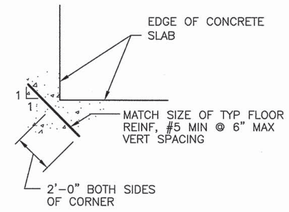


ADDITIONAL REINFORCEMENT
AT RECTANGULAR SLAB CORNER

NOTES:

1. SEE INDIVIDUAL STRUCTURE SHEETS FOR EXTRA HORIZONTAL REBARS AT CORNERS AND WALL INTERSECTIONS.
2. SEE SCHEDULE FOR BAR DEVELOPMENT AND LAP LENGTHS.
3. LONG STRAIGHT BARS WITH LAP SPLICES BENT BARS AT ENDS MAY BE SUBSTITUTED FOR LONG BARS WITH END HOOKS.
4. ADDITIONAL CORNER BARS REQUIRED ONLY AS SPECIFIED ON DESIGN DRAWINGS, AND TO BE STAGGERED. FULL WALL HEIGHT, WITH HORIZONTAL WALL REINFORCING. A=1/5 THE CLEAR SPAN DISTANCE MEASURED HORIZONTALLY BETWEEN WALLS, BUT IN NO CASE LESS THAN THE REQUIRED LENGTH OF LAPPED SPLICES FOR TOP BARS (UNLESS AT A PENETRATION).

## HORIZONTAL REINFORCING AT WALL CORNER

1 —

NTS

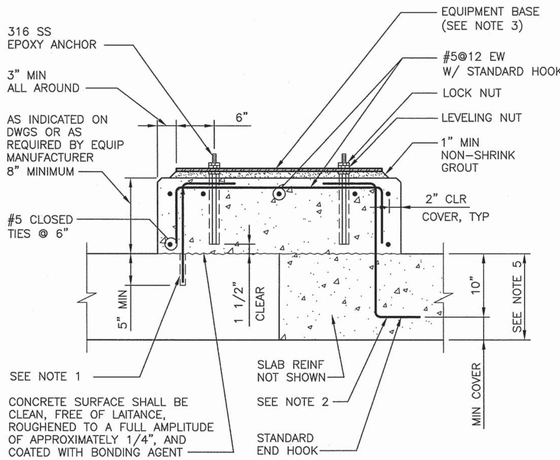


NOTES:

1. FOR NEW EQUIPMENT PADS ON EXISTING SLABS, DRILL INTO EXISTING SLAB AT 12" CENTERS AROUND PERIMETER OF EQUIPMENT PADS AND SET #5 HOOKED DOWELS IN EPOXY GROUT.
2. FOR EQUIPMENT PADS ON NEW SLABS, PROVIDE #5 DOWELS AT 12" CENTERS AROUND PERIMETER OF EQUIPMENT BASE.
3. EQUIPMENT DIMENSIONS SHALL BE AS INDICATED ON THE DRAWINGS OR AS DETERMINED BY THE EQUIPMENT MANUFACTURER AND APPROVED BY THE ENGINEER.
4. EQUIPMENT BASES SHALL BE INSTALLED LEVEL. TOLERANCE IS 1/16".
5. WHERE CONCRETE SLAB THICKNESS WILL NOT PROVIDE MINIMUM COVER AS SPECIFIED ON DWGS, PROVIDE EXTRA THICKNESS OF CONCRETE.

## EQUIPMENT PAD

4 —

NTS

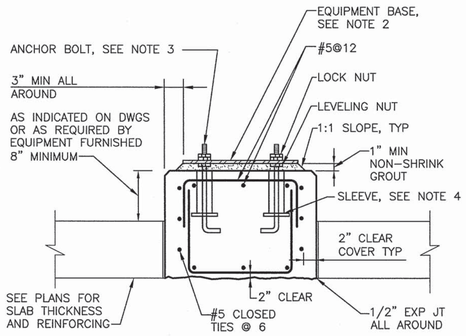


NOTES:

1. PROVIDE PAD UNDER ELECTRICAL AND MECHANICAL EQUIPMENT WEIGHING MORE THAN 5000 POUNDS, SUPPORTED ON GRADE, UNLESS NOTED OTHERWISE ON PLANS.
2. EQUIPMENT BASE DIMENSIONS SHALL BE AS INDICATED ON THE DRAWINGS OR AS DETERMINED BY THE EQUIPMENT MANUFACTURER AND APPROVED BY THE ENGINEER.
3. ANCHOR BOLTS AS RECOMMENDED BY THE EQUIPMENT MANUFACTURER. BOLTS SHALL BE HELD IN POSITION WITH A TEMPLATE WHILE EQUIPMENT BASE IS BEING CAST.
4. PIPE SLEEVES SHALL BE USED TO PROVIDE THE ANCHOR BOLT A MINIMUM MOVEMENT OF 1/2" IN ALL DIRECTIONS. MINIMUM SLEEVE LENGTH SHALL BE 8 TIMES THE BOLT DIAMETER. SLEEVES SHALL BE FILLED WITH NON-SHRINK GROUT. PIPE SLEEVES SHALL HAVE A MINIMUM INTERNAL DIAMETER 1" GREATER THAN BOLT DIAMETER AND A MAXIMUM INTERNAL DIAMETER OF 3" GREATER THAN BOLT DIAMETER. SLEEVE LENGTH SHALL BE 4" FOR 7/8" DIA AB AND SMALLER, 6" FOR 1" TO 1-3/8" AB, 12" FOR 1-1/2" AB.
5. EQUIPMENT BASES SHALL BE INSTALLED LEVEL. TOLERANCE IS 1/16".

## ISOLATED EQUIPMENT BASE

5 —

NTS

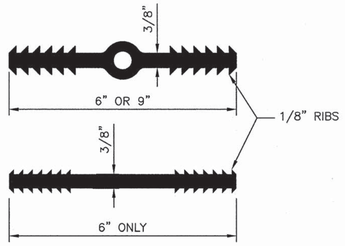


NOTES:

1. – USE 9" AT EXPANSION JOINTS ONLY.
   – USE 6" BULB AT OTHER JOINTS.
2. WATERSTOP TO BE PVC UNLESS NOTED OTHERWISE.

## WATERSTOP

2 —

NTS

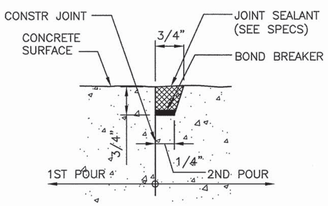


1. DO NOT APPLY BOND BREAKER TO SEALANT GROOVE. BOND BREAKER SHALL BE APPLIED NEATLY TO THE BOTTOM OF GROOVE ONLY.
2. BOND BREAKER TAPE SHALL NOT BE USED EXCEPT FOR SLIP DOWEL JOINTS.
3. ALL JOINTS OF HYDRAULIC STRUCTURES RETAINING WATER SHALL HAVE A SEALANT GROOVE.

## TYPICAL SEALANT GROOVE

6 —

NTS

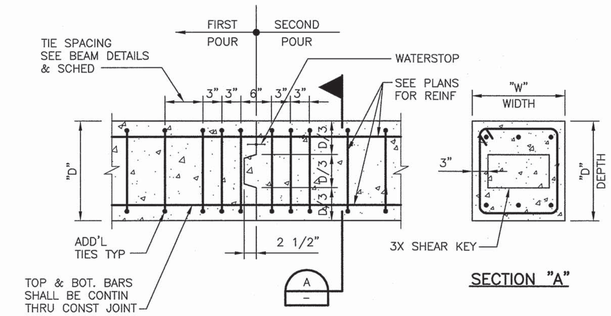


SECTION "A"

## CONCRETE BEAM CONSTRUCTION JOINT

3 —

NTS

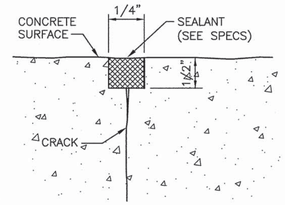


NOTES:

1. ENLARGE CRACK AT CONCRETE SURFACE AS SHOWN AND APPLY JOINT SEALANT.
2. ALL CRACKS IN WATER RETAINING STRUCTURE MUST BE REPAIRED PRIOR TO FILLING.
3. WIDEN CRACK SHALL BE 1/8" MINIMUM EACH SIDE OF THE CRACK CENTERLINE.

## CONCRETE CRACK REPAIR

7 —

NTS

FILE: 215786-00S06.dwg
DATE: Jun 30, 2015-8:34:55am, jwebb

HDR Engineering, Inc.

| ISSUE | DATE | DESCRIPTION |
|---|---|---|
| | | |
| | | |
| | | |
| | | |
| | | |
| | | |
| A | JUNE 2015 | ISSUED FOR BID |

| | |
|---|---|
| PROJECT MANAGER | C. OLSON |
| | |
| DESIGNED | O. TAVANGAR |
| DESIGNED | |
| CHECKED | O. TAVANGAR |
| DRAWN | D. ELDREDGE |
| DATE | JUNE 30, 2015 |
| | |
| PROJECT NUMBER | 215786 |

REGISTERED PROFESSIONAL ENGINEER
OMID TAVANGAR
NO. 54655
EXP. 12/31/15
CIVIL
STATE OF CALIFORNIA
6/30/15

CITY OF PINOLE CALIFORNIA 1903

PINOLE/HERCULES
WATER POLLUTION
CONTROL PLANT UPGRADE
CLIENT PN

**STRUCTURAL**

**TYPICAL CONCRETE DETAILS - II**

0 1" 2"

| | |
|---|---|
| FILENAME | 215786-00S06 |
| SCALE | NTS |

SHEET **00S06**

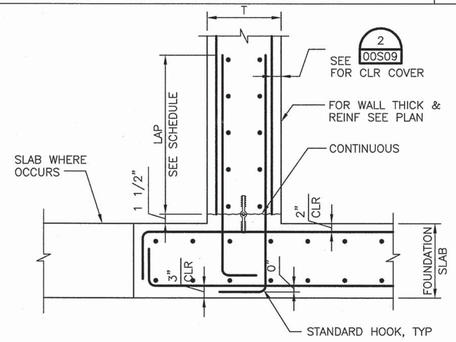


## WALL HORIZONTAL CONSTRUCTION JOINT WITHOUT SHEAR KEY

1 — NTS

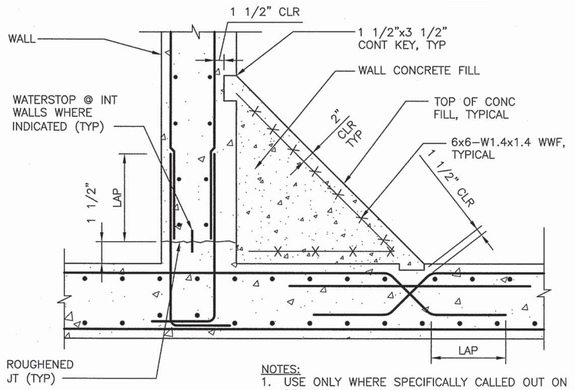


NOTES:
1. USE ONLY WHERE SPECIFICALLY CALLED OUT ON DRAWING.
2. REINFORCE CONCRETE FILL AS SHOWN WHERE CONCRETE FILL THICKNESS EXCEEDS 4".

## CONCRETE FILL REINFORCING

5 — NTS

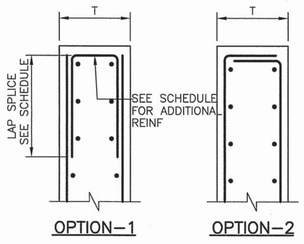


| T | ADDITIONAL REINFORCEMENT |
|---|---|
| T ≤ 1'–6" | #4 U TO MATCH SPACING OF VERTICALS |
| T > 1'–6" | #5 U TO MATCH SPACING OF VERTICALS |

NOTES:
1. FOR TYPICAL REINFORCMENT, SEE PLAN SHEETS.
2. TERMINATE TYPICAL REIFORCEMENT WITH END HOOK (OPTION–2) OR ADDITIONAL U BARS (OPTION–1).
3. THIS DETAIL TO BE USED ONLY WHEN A SPECIAL DETAIL IS NOT PROVIDED ON PLAN SHEETS.

## TOP OR END OF WALL REINFORCEMENT W/ "T" ≥ 1'–0"

9 — NTS

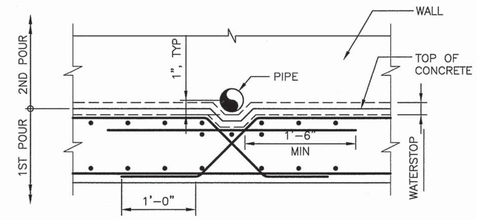


NOTES:
1. WALL REINFORCEMENT NOT SHOWN FOR CLARITY.
2. FOR ALL REINFORCEMENT SEE PLANS.

## WALL HORIZ CONST JOINT JOINT AT PIPE INTERFERENCE

2 — NTS

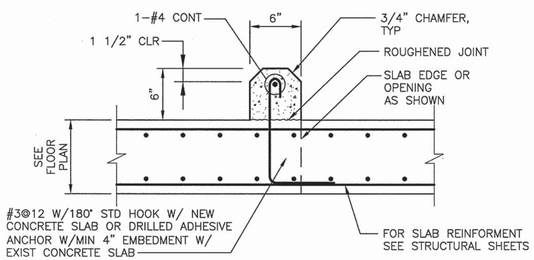


## CONCRETE CURB

6 — NTS

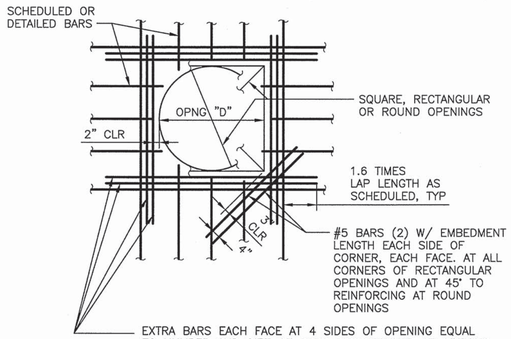


NOTES:
1. THIS DETAIL IS APPLICABLE ONLY TO WALLS OR SLABS WITH THICKNESS 36" OR LESS. FOR CONDITIONS AT THICKER CONCRETE, SEE PLANS AND DETAILS.
2. UNLESS SHOWN OTHERWISE ON DRAWINGS, PROVIDE EXTRA BARS AROUND OPENINGS IN WALLS, FLOORS, AND ROOFS AS SHOWN.
3. EVERY BAR DISCONTINUED AT AN OPENING SHALL BE REPLACED IN KIND BY ONE EXTRA BAR PLACED AT ONE SIDE OF THE OPENING AS SHOWN ABOVE.
4. FOR OPENINGS 8" OR LESS IN SLABS AND WALLS, NO EXTRA BARS ARE REQUIRED UNLESS OTHERWISE NOTED. SCHEDULED REBARS SHALL BE RESPACED (NOT CUT) TO ALLOW FOR UNIMPAIRED OPENINGS.

## REINFORCING AT RECTANGULAR/CIRCULAR OPENINGS

10 — NTS

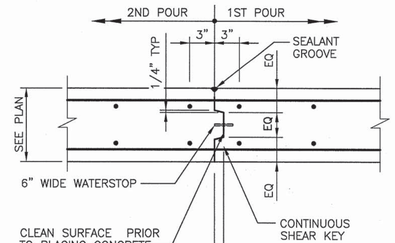


NOTE:

CONTRACTOR TO SUBMIT PROPOSED CONSTRUCTION JOINT LAYOUT (IF DIFFERENT FROM SHOWN ON FLOOR PLAN), FOR REVIEW AND APPROVAL OF THE ENGINEER OF RECORD PRIOR TO PLACING CONCRETE.

## WALL VERT CONST JOINT

3 — NTS

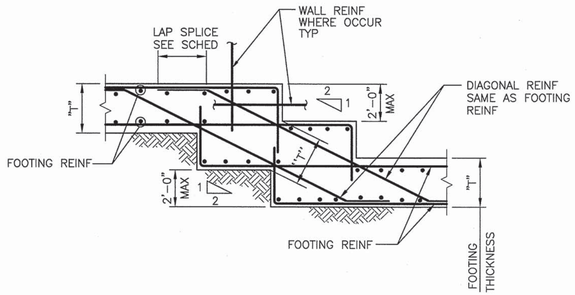


NOTE:

1. FOR FOOTING REINFORCEMENT AND FOOTING SIZE, SEE FOUNDATION PLAN, SECTIONS AND SCHEDULE.

## STEPPED FOOTING

7 — NTS

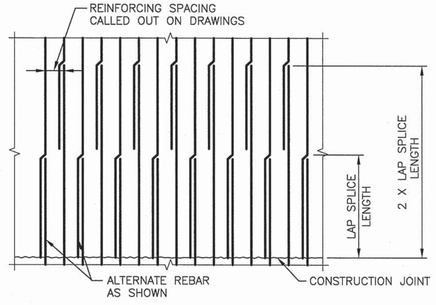


## WALL VERTICAL REINFORCING AT CONSTRUCTION JOINT

11 — NTS

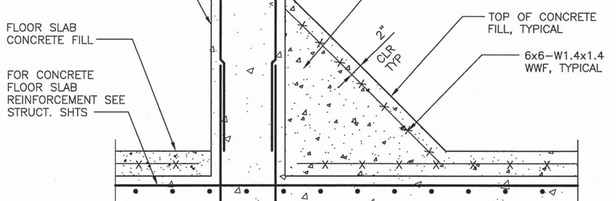


NOTE:

REINFORCE CONCRETE FILL AS SHOWN WHERE CONCRETE FILL THICKNESS EXCEEDS 4".

## CONCRETE FILL REINFORCING

4 — NTS

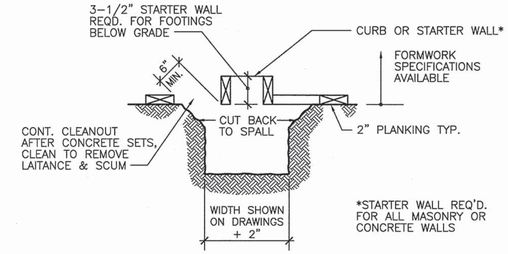


FOUNDATION CONCRETE MAY BE PLACED DIRECTLY INTO NEAT EXCAVATIONS PROVIDED THE FOUNDATION TRENCH WALLS ARE STABLE, SUBJECT TO THE APPROVAL OF THE ENGINEER. IN SUCH CASE, THE MINIMUM FORMWORK SHOWN IN THIS DETAIL IS MANDATORY TO INSURE CLEAN EXCAVATIONS PRIOR TO AND DURING THE PLACING OF CONCRETE.

FORMWORK IS NOT PERMITTED BELOW GRADE UNLESS FOUNDATION IS FULLY FORMED. STAKES ARE NOT PERMITTED WITHIN THE FOOTING SECTION.

## MINIMUM FORMWORK REQUIREMENTS

8 — NTS

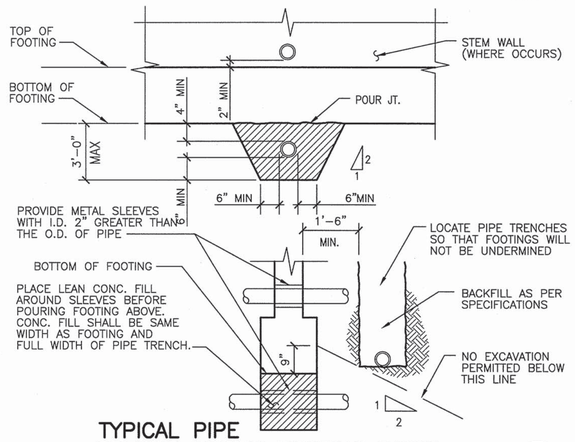


## TYPICAL PIPE TRENCH UNDER FOOTING DETAIL

12 — NTS

FILE: 215786–00S07.dwg
DATE: Jun 30, 2015–10:18:35am, rvallesp

HDR Engineering, Inc.

| ISSUE | DATE | DESCRIPTION |
|---|---|---|
| A | JUNE 2015 | ISSUED FOR BID |

| | |
|---|---|
| PROJECT MANAGER | C. OLSON |
| | |
| DESIGNED | O. TAVANGAR |
| DESIGNED | |
| CHECKED | O. TAVANGAR |
| DRAWN | D. ELDREDGE |
| DATE | JUNE 30, 2015 |
| | |
| PROJECT NUMBER | 215786 |

REGISTERED PROFESSIONAL ENGINEER — OMID TAVANGAR — NO. 54655 EXP. 12/31/15 — CIVIL — STATE OF CALIFORNIA — 6/30/15

CITY OF PINOLE CALIFORNIA 1903

PINOLE/HERCULES WATER POLLUTION CONTROL PLANT UPGRADE CLIENT PN

**STRUCTURAL**

**TYPICAL CONCRETE DETAILS - III**

0 1" 2"

| FILENAME | 215786–00S07 |
|---|---|
| SCALE | NTS |

SHEET 00S07

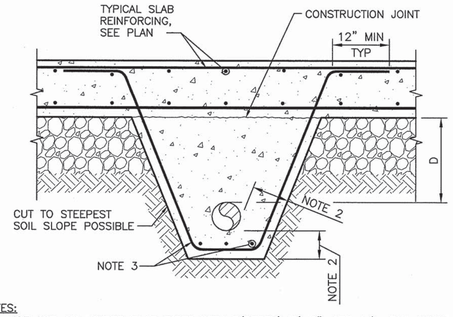


NOTES:
1. USE FOR ALL UNDER SLAB PIPES WITH D(DEPTH)≤3'–0". SEE 2/– FOR PIPES AT D(DEPTH)>3'–0".
2. SEE SECTION FOR DIMENSIONS. 6" MIN CLEAR COVER FOR PIPE DIA<24" AND 8" MIN CLEAR COVER FOR PIPE DIA>=24".
3. #4@12" EACH WAY FOR PIPE DIA<24" AND #5@12" EACH WAY FOR PIPE DIA>=24".

## PIPE OR CONDUIT ENCASEMENT D<3'–0"

SCALE: NTS

1 / –

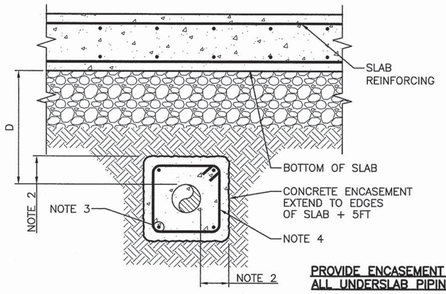


**PROVIDE ENCASEMENT FOR ALL UNDERSLAB PIPING**

NOTES:
1. USE FOR ALL UNDERSLAB PIPES WITH D(DEPTH)>3'–0" SEE 1/– FOR PIPES D(DEPTH)≤3'–0".
2. SEE SECTION FOR DIMENSIONS. 6" MIN CLEAR COVER FOR PIPE DIA<2'–0" AND 8" MIN CLEAR COVER FOR PIPE DIA>=2'–0".
3. 4–#4 FOR PIPE DIA<12", 4–#5 FOR PIPE DIA BETWEEN 12" AND 24", #5@12" FOR PIPE DIA>=24".
4. #3 STIRRUPS @12" FOR PIPE DIA<24", #4 STIRRUPS FOR PIPE DIA>=24".

## PIPE OR CONDUIT ENCASEMENT D>3'–0"

SCALE: NTS

2 / –

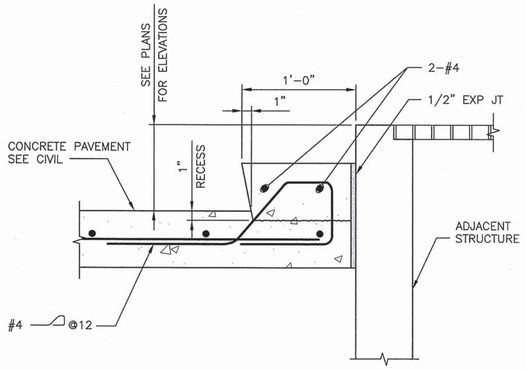


## CONCRETE STAIR

SCALE: NTS

4 / 00S08

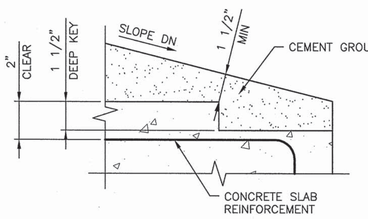


## CEMENT GROUT KEY – AT CONCRETE SLAB

SCALE: NTS

5 / 00S08

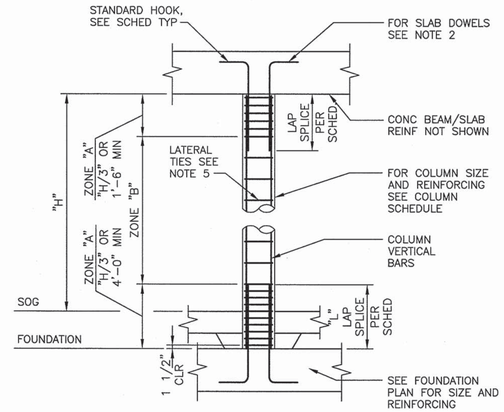


**TYPICAL COLUMN DETAIL**

| CONCRETE COLUMN SCHEDULE | | | |
|---|---|---|---|
| LATERAL TIES ZONE B | #4@6" | #4@6" | #4@6" |
| LATERAL TIES ZONE A | #4@6" | #4@6" | #4@6" |
| VERTICAL BARS | 8–#7 | 12–#6 | 20–#8 |
| COLUMN SIZE | 18"X18" | 24"X24" | 24"X24" |
| DETAIL (COLUMN TYPE) | A – | B – | C – |
| MARK | 32C–1 | 61C–1 | 61C–2 |

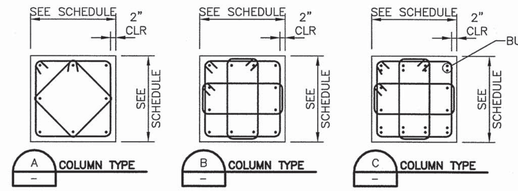


NOTES:
1. ALL FOOTING DOWELS SHALL MATCH COLUMN VERTICAL REINF. UNO.
2. SLAB DOWELS SHALL MATCH COLUMN VERTICAL REINF.
3. CONCRETE STRENGTH f'c=4 KSI
4. "d" = BAR DIAMETER
5. SEE COLUMN SCHEDULE FOR TIE SPACING
6. SEE DETAILS FOR ADDITIONAL INFORMATION

## CONCRETE COLUMN REINFORCING SCHEDULE AND DETAILS

SCALE: NTS

3 / –

FILE: 215786–00S08.dwg
DATE: Jun 30, 2015–8:35:04am, jwebb

HDR Engineering, Inc.

| ISSUE | DATE | DESCRIPTION |
|---|---|---|
| A | JUNE 2015 | ISSUED FOR BID |

| | |
|---|---|
| PROJECT MANAGER | C. OLSON |
| DESIGNED | M. RAMANATHAN |
| DESIGNED | |
| CHECKED | C. OLSON |
| DRAWN | D. ELDREDGE |
| DATE | JUNE 30, 2015 |
| PROJECT NUMBER | 215786 |

REGISTERED PROFESSIONAL ENGINEER OMKAR TAVANGAR NO. 54655 EXP. 12/31/15 CIVIL STATE OF CALIFORNIA 10/30/15

CITY OF PINOLE CALIFORNIA 1903

PINOLE/HERCULES
WATER POLLUTION
CONTROL PLANT UPGRADE
CLIENT PN

**STRUCTURAL**

**TYPICAL CONCRETE DETAILS - IV**

0 1" 2"

| | |
|---|---|
| FILENAME | 215786–00S08 |
| SCALE | AS NOTED |

SHEET **00S08**

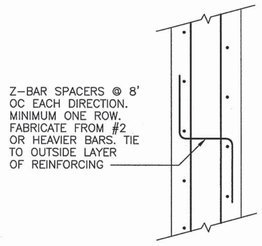


## SPACER FOR WALL REINFORCEMENT
NTS — 1

## LOCATION / * MINIMUM COVER

| LOCATION | * MINIMUM COVER |
|---|---|
| UNFORMED SURFACES ADJACENT TO EARTH | 3" |
| FORMED OR TOP SURFACES EXPOSED TO WEATHER OR SATURATED AIR, SUBMERGED OR IN CONTACT WITH EARTH: | 2" |
| OTHER LOCATIONS: BARS IN BEAMS OR GIRDERS, INCLUDING STIRRUPS AND COLUMN SPIRALS OR TIES | 1 1/2" |
| SLABS, WALLS AND JOINTS #9 AND LARGER | BAR DIA + 1/4" |
| #8 AND SMALLER | 1 1/2" |

* COVER FOR REINFORCING STEEL SHALL NOT BE LESS THAN THE MINIMUM GIVEN ABOVE (NO MINUS TOLERANCE) , AND SHALL NOT EXCEED THE MINIMUM BY MORE THAN 1/4 INCH WHERE THE CONCRETE THICKNESS IS 24" OR LESS, OR MORE THAN 1/2 INCH WHERE THE CONCRETE THICKNESS IS MORE THAN 24 INCHES.

## REINFORCEMENT CONCRETE COVER
NTS — 2

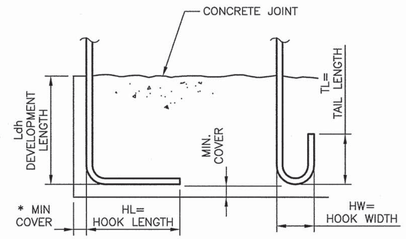


90° STD HOOK  180° STD HOOK

| BAR SIZE GRADE 60 | f'c=4000 psi & 4500 psi | | | | f'c=5000 psi |
|---|---|---|---|---|---|
| | Ldh * | HL | HW | TL | Ldh * |
| #3 | 6" | 6" | 3" | 3" | 6" |
| #4 | 7" | 8" | 4" | 4 1/2" | 6" |
| #5 | 9" | 10" | 5" | 5" | 8" |
| #6 | 10" | 1'-0" | 6" | 6" | 9" |
| #7 | 1'-0" | 1'-2" | 7" | 7" | 11" |
| #8 | 1'-2" | 1'-4" | 8" | 8" | 1'-0" |
| #9 | 1'-3" | 1'-7" | 11 3/4" | 10 1/2" | 1'-2" |
| #10 | 1'-5" | 1'-10" | 1'-1 1/4" | 11 1/2" | 1'-3" |
| #11 | 1'-7" | 2'-0" | 1'-2 3/4" | 1'-1" | 1'-5" |

* COMPLYING WITH MINIMUM COVER REQUIREMENTS OF ACI 318, 12.5.3.2. OTHERWISE Ldh MUST BE RE-CALCULATED.

## REINFORCING HOOK SCHEDULE
NTS — 3

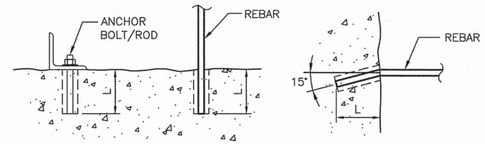


VERTICAL APPLICATION  HORIZONTAL APPLICATION

| ADHESIVE ANCHOR SCHEDULE | | | |
|---|---|---|---|
| REINFORCING BARS | | ANCHOR BOLTS/RODS | |
| BAR SIZE | EMBED LENGTH (L) | DIA (IN) | EMBED LENGTH (L) |
| #3 | 4" | 3/8" | 5" |
| #4 | 5" | 1/2" | 6" |
| #5 | 6" | 5/8" | 7" |
| #6 | 7" | 3/4" | 8" |
| #7 | 8" | 7/8" | 9" |
| #8 | 9" | 1" | 10" |
| #9 | 10" | | |
| #10 | 12" | | |

NOTES:
1. EPOXY TYPE IS SUBJECT TO APPROVAL OF THE ENGINEER OF RECORD.
2. EMBEDMENT LENGTHS SHOWN ARE MINIMUM. PROVIDE MANUFACTURER'S RECOMMENDATIONS FOR INSTALLATION.

## ADHESIVE ANCHOR DETAILS & SCHEDULE
NTS — 4

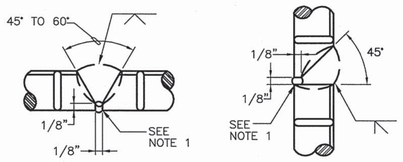


HORIZONTAL POSITION – A  VERTICAL POSITION – B

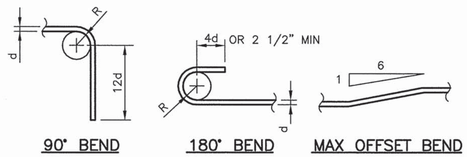


90° BEND  180° BEND  MAX OFFSET BEND

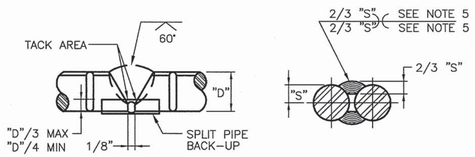


HORIZONTAL AND VERTICAL POSITION – C  HORIZONTAL AND VERTICAL POSITION – D

NOTES:
1. CHIP, GRIND, OR GOUGE TO SOUND METAL BEFORE WELDING OTHER SIDE.
2. USE DETAIL A & B FOR #9 & LARGER BARS. USE DETAIL C FOR #8 & SMALLER BARS. USE DETAIL D FOR #6 & SMALLER BARS.
3. E 90 ELECTRODE FOR GRADE 60.
4. SEE AWS D1.4 FOR WELDING PROCESS, PREHEAT REQUIREMENTS, AND OTHER DETAILS. SUBMIT WELDING PROCEDURE PER AWS.
5. 1 1/2" FOR #3 AND #4 BARS; 2" FOR #5 BARS; AND 2 1/2" FOR #6 BARS.

## WELDED SPLICE OF REINFORCING BARS
NTS — 5

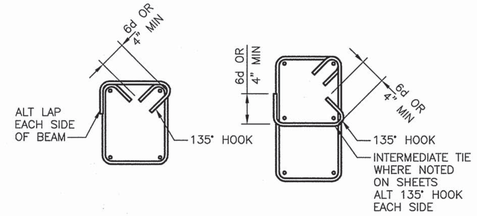


TYP. STIRRUP  TYP. COLUMN TIE OR CLOSED STIRRUP

| BAR SIZE | R |
|---|---|
| #3 TIES & STIRRUPS | 2d |
| #4–#8 | 3d |
| #9–#11 | 4d |
| #14–#18 | 5d |

## TYPICAL STIRRUPS & TIES
NTS — 6

| MINIMUM LAP SPLICE LENGTHS f'c = 4000 psi & 4500 psi, fy = 60.0 ksi | | | | | |
|---|---|---|---|---|---|
| BAR | * MIN BAR SPACING | LAPS FOR BARS SPACED GREATER THAN MIN BAR SPACING | | LAPS FOR BARS SPACED CLOSER THAN MIN BAR SPACING | |
| | | VERTICAL | OTHER | VERTICAL | OTHER |
| #3 | 3" | 1'-4" | 1'-6" | 1'-4" | 1'-6" |
| #4 | 3" | 1'-7" | 2'-0" | 1'-8" | 2'-2" |
| #5 | 3" | 1'-11" | 2'-6" | 2'-7" | 3'-4" |
| #6 | 4" | 2'-4" | 3'-0" | 3'-8" | 4'-9" |
| #7 | 4" | 3'-6" | 4'-6" | 4'-11" | 6'-5" |
| #8 | 4" | 4'-7" | 5'-11" | 6'-6" | 8'-6" |
| #9 | 4 1/2" | 5'-9" | 7'-6" | 8'-3" | 10'-9" |
| #10 | 5" | 7'-4" | 9'-6" | 10'-6" | 13'-7" |
| #11 | 5 5/8" | 9'-0" | 11'-8" | 12'-10" | 16'-8" |

NOTES:
1. ALL REBAR SPLICE LENGTHS SHALL BE AS SHOWN UNDER HEADING "VERTICAL" EXCEPT IF SPLICED BARS ARE HORIZONTAL BARS WITH 12" OR MORE CONCRETE BELOW. THEN SPLICE LENGTH SHALL BE AS SHOWN UNDER HEADING "OTHER".
2. AT SPLICES THE BAR SPACING IS THE CENTER TO CENTER DISTANCE BETWEEN ADJACENT REBARS.
3. ALL SPLICES SHALL BE CONTACT SPLICES AND WIRED TOGETHER.
4. NO WELDED OR MECHANICAL SPLICES ARE PERMITTED UNLESS INDICATED OTHERWISE.
5. UNLESS OTHERWISE SHOWN, SPLICES FOR BOTTOM REINFORCING BARS IN BEAMS AND SLABS SHALL BE CENTERED OVER THE SUPPORTS. SPLICES FOR TOP REINFORCING BARS SHALL BE LOCATED ON CENTERLINE OF SPAN.
6. FOR HOOP REINFORCEMENT IN ROUND CONCRETE WALLS, USE TRIPLE STAGGERED LAP SPLICES AS SHOWN IN THIS DETAIL.

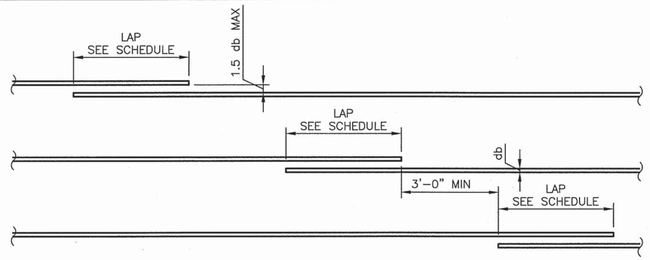


## CONCRETE REINFORCING LAP SPLICE SCHEDULE
NO SCALE — 7

FILE: 215786-00S09.dwg
DATE: Jun 30, 2015 - 8:35:07am, jwebb

HDR Engineering, Inc.

| ISSUE | DATE | DESCRIPTION |
|---|---|---|
| A | JUNE 2015 | ISSUED FOR BID |

| | |
|---|---|
| PROJECT MANAGER | C. OLSON |
| DESIGNED | M. RAMANATHAN |
| DESIGNED | |
| CHECKED | C. OLSON |
| DRAWN | D. ELDREDGE |
| DATE | JUNE 30, 2015 |
| PROJECT NUMBER | 215786 |

REGISTERED PROFESSIONAL ENGINEER — DAVID TAVANGAR — NO. 54655 EXP. 12/31/15 — CIVIL — STATE OF CALIFORNIA — 6/30/15

CITY OF PINOLE CALIFORNIA — 1903

PINOLE/HERCULES WATER POLLUTION CONTROL PLANT UPGRADE CLIENT PN

**STRUCTURAL**

**TYPICAL CONCRETE REINFORCING DETAILS**

0 1" 2"

| FILENAME | 215786-00S09 |
|---|---|
| SCALE | AS NOTED |

SHEET 00S09

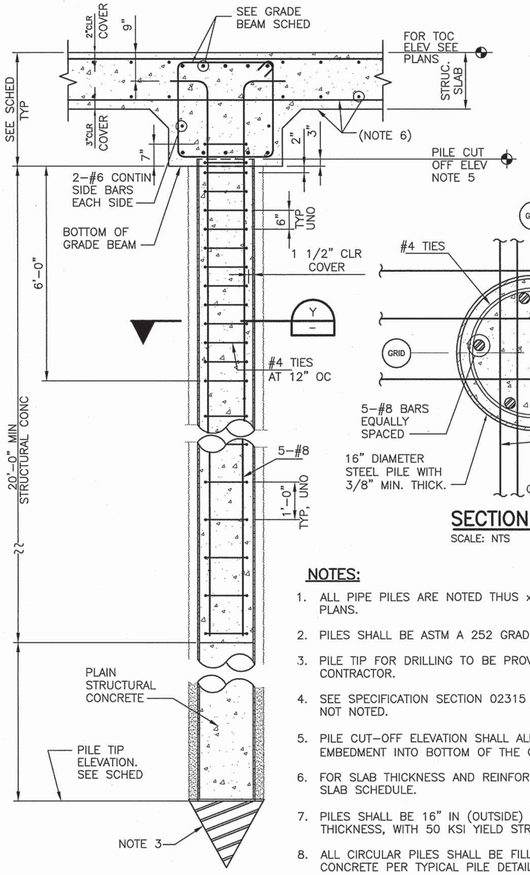


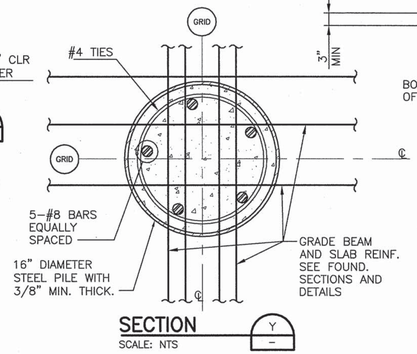


SECTION
SCALE: NTS

**NOTES:**

1. ALL PIPE PILES ARE NOTED THUS xxP–yy ON FOUNDATION PLANS.
2. PILES SHALL BE ASTM A 252 GRADE 3 WITH FY=50 KSI.
3. PILE TIP FOR DRILLING TO BE PROVIDED BY THE CONTRACTOR.
4. SEE SPECIFICATION SECTION 02315 FOR ALL INFORMATION NOT NOTED.
5. PILE CUT–OFF ELEVATION SHALL ALLOW 3" OF PILE EMBEDMENT INTO BOTTOM OF THE GRADE BEAM/PILE CAP.
6. FOR SLAB THICKNESS AND REINFORCING SEE PLANS AND SLAB SCHEDULE.
7. PILES SHALL BE 16" IN (OUTSIDE) DIAMETER x 3/8" MIN. THICKNESS, WITH 50 KSI YIELD STRENGTH.
8. ALL CIRCULAR PILES SHALL BE FILLED WITH STRUCTURAL CONCRETE PER TYPICAL PILE DETAIL.
9. SEE PLANS FOR ALL TOP OF CONCRETE ELEVATIONS.

## TORQUE–DOWN TUBEX GROUT INJECTION STEEL PILES

1

SCALE: NTS

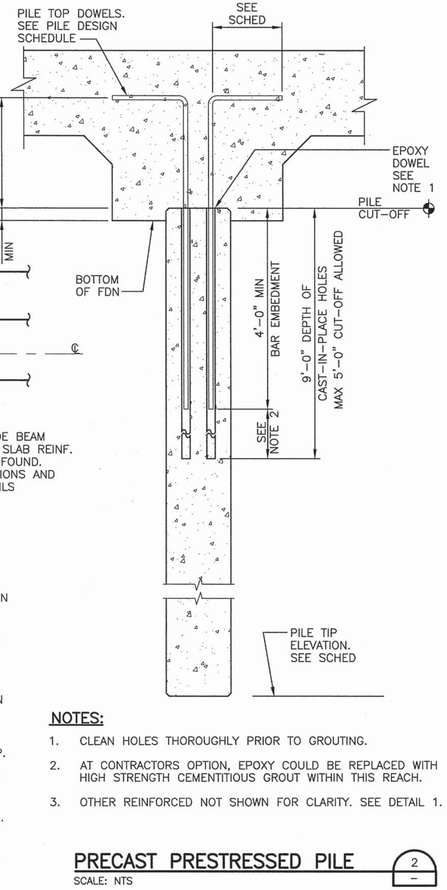


**NOTES:**

1. CLEAN HOLES THOROUGHLY PRIOR TO GROUTING.
2. AT CONTRACTORS OPTION, EPOXY COULD BE REPLACED WITH HIGH STRENGTH CEMENTITIOUS GROUT WITHIN THIS REACH.
3. OTHER REINFORCED NOT SHOWN FOR CLARITY. SEE DETAIL 1.

## PRECAST PRESTRESSED PILE

2

SCALE: NTS

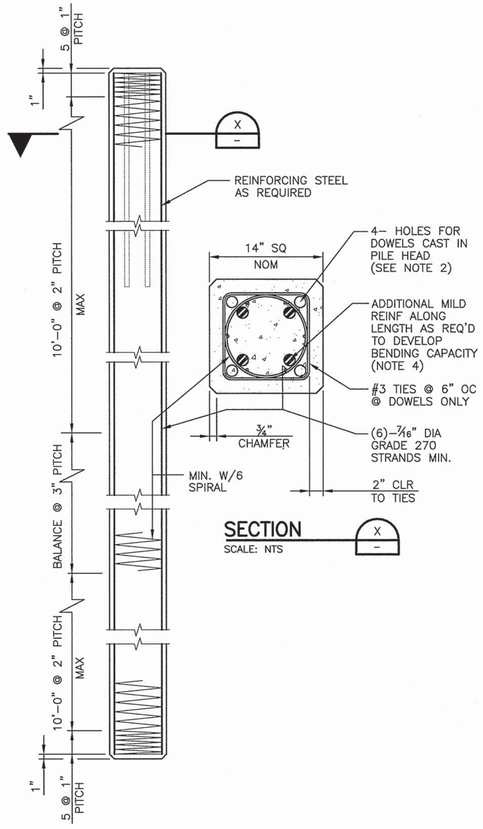


SECTION
SCALE: NTS

**NOTES:**

1. REINFORCEMENT SHOWN IS A MINIMUM, SEE PILE DESIGN NOTE 1.
2. COORDINATE HOLE DIAM. WITH SIZE OF MILD STEEL PER PILE DESIGN SCHEDULE. FOR DOWEL SIZE, SEE PILE DESIGN SCHEDULE.
3. SEE SPECIFICATION SECTION 02317 FOR ALL INFORMATION NOT NOTED.
4. MILD STEEL SHALL BE DESIGNED BY PILE MANUF.

## PRESTRESSED PILE REINFORCING DETAIL

3

SCALE: NTS

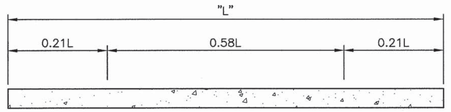


**NOTES**

1. PICK UP POINTS TO BE SHOWN ON PILE.

## PRESTRESSED PILE HANDLING DETAIL

4

SCALE: NTS

## PILE DESIGN SCHEDULE NOTES:

1. CONTRACTOR TO FURNISH, DESIGN, DETAIL AND INSTALL PILES IN CONFORMANCE WITH THE REQUIREMENTS OF SECTION 02317 AND THESE DRAWINGS. DESIGN CALCULATIONS MUST BE PREPARED SIGNED, AND STAMPED BY A REGISTERED CIVIL OR STRUCTURAL ENGINEER LICENSED IN THE STATE OF CALIFORNIA AND MUST BE SUBMITTED WITH SHOP DRAWINGS REQUIRED BY SECTION 02317.
2. PILE DESIGN CRITERIA:
   - A. PILE DESIGN BASED ON SUBSURFACE GEOTECHNICAL EVALUATION FOR PINOLE/HERCULIES WATER POLLUTION CONTROL PLANT UPGRADE, DATED MARCH 11, 2014.
   - A. PILES TO BE EITHER 14" SQUARE PRECAST PRESTRESSED DRIVEN, AND 16" DIAMETER "TUBEX" GROUT INJECTION TORQUE–DOWN STEEL PILES AS NOTED IN SCHEDULE.
   - B. PILES SHALL CONFORM TO THE REQUIREMENTS OF SECTION 1810 OF THE 2013 CALIFORNIA BUILDING CODE.
   - C. CONCRETE FOR PRESTRESSED PILES SHALL TEST NOT LESS THAN 7,000 PSI AT 28 DAYS. NO PILES SHALL BE DRIVEN WITH LESS THAN 28 DAY AGE.
   - D. CONCRETE FOR "TUBEX" STEEL PILES SHALL NOT TEST LESS THAN 4,000 PSI AT 28 DAYS
   - E. PRESTRESSING STEEL: ASTM A–416 GRADE 270.
   - F. MILD REINFORCING STEEL: ASTM A–615 GRADE 60.
   - G. PILE DESIGN IS BASED ON FIXED HEAD CONDITION WITH 1/4" LATERAL DISPLACEMENT AT TOP. FOR MINIMUM REQUIRED PILE CAPACITIES (WORKING LOADS) SEE PILE DESIGN SCHEDULE.
   - H. PILES SHALL BE DESIGNED FOR AXIAL COMPRESSION COMBINED WITH LATERAL LOADS SHOWN IN THE PILE DESIGN SCHEDULE. PROVIDE MILD STEEL REINFORCING TO MEET MINIMUM STEEL REQUIREMENTS AND/OR RESIST BENDING MOMENTS AS REQUIRED.
   - I. ALL FORCES AND BENDING MOMENTS SHOWN IN SCHEDULE ARE SERVICE LEVEL.
3. SEE SPEC FOR REQUIRED SUBMITTAL TESTING AND DRIVING REQUIREMENTS.
4. THE GEOTECHNICAL ENGINEER SHALL VISUALLY OBSERVE ALL PILE INSTALLATION OPERATIONS, AND REVIEW THE CONTRACTORS DRIVING EQUIPMENT, HAMMER ENERGY AND DRIVING LOGS FOR EACH PILE.

## PILE DESIGN SCHEDULE

| ITEMS | GRIT REMOVAL | ELECTRICAL BUILDING GENERATOR PAD | SOLIDS HANDLING | ALL CHEMICAL STORAGES AND EFFLUENT SURGE TANK |
|---|---|---|---|---|
| AXIAL COMPRESSION | 80 kips | 60 kips | 80 kips | 55 kips |
| AXIAL TENSION | 25 kips | 20 kips | 20 kips | 20 kips |
| NEGATIVE MOMENT @ BOTTOM OF PILE CAP | 100 k–ft | 50 k–ft | 50 k–ft | 0 k–ft |
| POSITIVE MOMENT @ "X" BELOW BOTTOM OF PILE CAP | 75 k–ft @ X=13 ft | 55 k–ft @ X=6 ft | 45 k–ft @ X=6 ft | 55 k–ft @ X=6 ft |
| SHEAR | 24 kips | 8 kips | 16 kips | 20 kips |
| PILE TOP DOWELS | 4–# 10 | 4–# 9 | 5–# 8 | 4–# 9 |
| PILE TYPE | 14 INCH SQ. PRESTRESSED CONCRETE | 14 INCH SQ. PRESTRESSED CONCRETE | 16 INCH ϕ "TUBEX" STEEL PILE | 14 INCH SQ. PRESTRESSED CONCRETE |
| CONC. STRENGTH fc' | 7000 psi | 7000 psi | 4000 psi | 7000 psi |

## PILE SCHEDULE

| SEQ. NO. | PILE I.D. | PILE TIP ELEVATION | LOCATION |
|---|---|---|---|
| 1 | 13P–1 | 72.0' | GRIT CHAMBER |
| 2 | 13P–2 | 72.0' | GRIT CHAMBER |
| 3 | 13P–3 | 72.0' | GRIT CHAMBER |
| 4 | 13P–4 | 72.0' | GRIT CHAMBER |
| 5 | 13P–5 | 72.0' | GRIT CHAMBER |
| 6 | 13P–6 | 72.0' | GRIT CHAMBER |
| 7 | 13P–7 | 72.0' | GRIT CHAMBER |
| 8 | 13P–8 | 72.0' | GRIT CHAMBER |
| 9 | 13P–9 | 72.0' | GRIT CHAMBER |
| 10 | 13P–10 | 72.0' | GRIT CHAMBER |
| 11 | 13P–11 | 72.0' | GRIT CHAMBER |
| 12 | 13P–12 | 72.0' | GRIT CHAMBER |
| 13 | 13P–13 | 72.0' | GRIT CHAMBER |
| 14 | 13P–14 | 72.0' | GRIT CHAMBER |
| 15 | 13P–15 | 72.0' | GRIT CHAMBER |
| 16 | 13P–16 | 72.0' | GRIT CHAMBER |
| 17 | 13P–17 | 72.0' | GRIT CHAMBER |
| 18 | 13P–18 | 72.0' | GRIT CHAMBER |
| 19 | 13P–19 | 72.0' | GRIT CHAMBER |
| 20 | 13P–20 | 72.0' | GRIT CHAMBER |
| 21 | 13P–21 | 72.0' | GRIT CHAMBER |
| 22 | 13P–22 | 72.0' | GRIT CHAMBER |
| 23 | 13P–23 | 70.0' | GRIT CHAMBER |
| 24 | 13P–24 | 70.0' | GRIT CHAMBER |
| 25 | 13P–25 | 70.0' | GRIT CHAMBER |
| 26 | 13P–26 | 70.0' | GRIT CHAMBER |
| 27 | 13P–27 | 70.0' | GRIT CHAMBER |
| 28 | 13P–28 | 70.0' | GRIT CHAMBER |
| 29 | 13P–29 | 72.0' | GRIT CHAMBER |
| 30 | 13P–30 | 72.0' | GRIT CHAMBER |
| 31 | 13P–31 | 72.0' | GRIT CHAMBER |
| 32 | 13P–32 | 72.0' | GRIT CHAMBER |
| 33 | 13P–33 | 72.0' | GRIT CHAMBER |
| 34 | 13P–34 | 72.0' | GRIT CHAMBER |
| 35 | 13P–35 | 72.0' | GRIT CHAMBER |
| 36 | 13P–36 | 72.0' | GRIT CHAMBER |
| 37 | 13P–37 | 72.0' | GRIT CHAMBER |
| 38 | 13P–38 | 72.0' | GRIT CHAMBER |
| 39 | 13P–39 | 72.0' | GRIT CHAMBER |
| 40 | 13P–40 | 72.0' | GRIT CHAMBER |
| 41 | 13P–41 | 72.0' | GRIT CHAMBER |
| 42 | 13P–42 | 72.0' | GRIT CHAMBER |
| 43 | 13P–43 | 72.0' | GRIT CHAMBER |
| 44 | 13P–44 | 72.0' | GRIT CHAMBER |
| 45 | 13P–45 | 72.0' | GRIT CHAMBER |
| 46 | 13P–46 | 72.0' | GRIT CHAMBER |
| 47 | 13P–47 | 72.0' | GRIT CHAMBER |
| 48 | 13P–48 | 72.0' | GRIT CHAMBER |
| 49 | 13P–49 | 72.0' | GRIT CHAMBER |
| 50 | 13P–50 | 72.0' | GRIT CHAMBER |
| 51 | 13P–51 | 72.0' | GRIT CHAMBER |
| 52 | 13P–52 | 72.0' | GRIT CHAMBER |
| 53 | 13P–53 | 72.0' | GRIT CHAMBER |
| **54** | **13P–54** | **72.0'** | **GRIT CHAMBER** |
| 55 | 13P–55 | 72.0' | GRIT CHAMBER |
| 56 | 13P–56 | 72.0' | GRIT CHAMBER |
| 57 | 13P–57 | 72.0' | GRIT CHAMBER |
| 58 | 13P–58 | 72.0' | GRIT CHAMBER |
| 59 | 13P–59 | 72.0' | GRIT CHAMBER |
| 60 | 13P–60 | 72.0' | GRIT CHAMBER |
| 61 | 13P–61 | 72.0' | GRIT CHAMBER |
| 62 | 13P–62 | 72.0' | GRIT CHAMBER |
| 63 | 14P–1 | 77.0' | ELECTRICAL/MAINTENANCE BUILDING |
| 64 | 14P–2 | 77.0' | ELECTRICAL/MAINTENANCE BUILDING |
| 65 | 14P–3 | 77.0' | ELECTRICAL/MAINTENANCE BUILDING |
| 66 | 14P–4 | 77.0' | ELECTRICAL/MAINTENANCE BUILDING |
| 67 | 14P–5 | 77.0' | ELECTRICAL/MAINTENANCE BUILDING |
| 68 | 14P–6 | 77.0' | ELECTRICAL/MAINTENANCE BUILDING |

## PILE SCHEDULE (CONTINUED)

| SEQ. NO. | PILE I.D. | PILE TIP ELEVATION | LOCATION |
|---|---|---|---|
| 69 | 14P–7 | 77.0' | ELECTRICAL/MAINTENANCE BUILDING |
| 70 | 14P–8 | 77.0' | ELECTRICAL/MAINTENANCE BUILDING |
| 71 | 14P–9 | 77.0' | ELECTRICAL/MAINTENANCE BUILDING |
| 72 | 14P–10 | 77.0' | ELECTRICAL/MAINTENANCE BUILDING |
| 73 | 14P–11 | 77.0' | ELECTRICAL/MAINTENANCE BUILDING |
| 74 | 14P–12 | 77.0' | ELECTRICAL/MAINTENANCE BUILDING |
| 75 | 14P–13 | 77.0' | ELECTRICAL/MAINTENANCE BUILDING |
| 76 | 14P–14 | 77.0' | ELECTRICAL/MAINTENANCE BUILDING |
| 77 | 14P–15 | 77.0' | ELECTRICAL/MAINTENANCE BUILDING |
| 78 | 14P–16 | 77.0' | GENERATOR PAD |
| **79** | **14P–17** | **77.0'** | **GENERATOR PAD** |
| 80 | 14P–18 | 77.0' | GENERATOR PAD |
| 81 | 14P–19 | 77.0' | GENERATOR PAD |
| 82 | 14P–20 | 77.0' | GENERATOR PAD |
| 83 | 14P–21 | 77.0' | GENERATOR PAD |
| 84 | 14P–22 | 77.0' | GENERATOR PAD |
| 85 | 14P–23 | 77.0' | GENERATOR PAD |
| 86 | 14P–24 | 77.0' | GENERATOR PAD |
| 87 | 14P–25 | 77.0' | GENERATOR PAD |
| 88 | 61P–1 | 68.0' | SOLIDS HANDLING BUILDING |
| 89 | 61P–2 | 68.0' | SOLIDS HANDLING BUILDING |
| 90 | 61P–3 | 68.0' | SOLIDS HANDLING BUILDING |
| 91 | 61P–4 | 68.0' | SOLIDS HANDLING BUILDING |
| 92 | 61P–5 | 68.0' | SOLIDS HANDLING BUILDING |
| 93 | 61P–6 | 68.0' | SOLIDS HANDLING BUILDING |
| 94 | 61P–7 | 68.0' | SOLIDS HANDLING BUILDING |
| 95 | 61P–8 | 68.0' | SOLIDS HANDLING BUILDING |
| 96 | 61P–9 | 68.0' | SOLIDS HANDLING BUILDING |
| 97 | 61P–10 | 68.0' | SOLIDS HANDLING BUILDING |
| 98 | 61P–11 | 68.0' | SOLIDS HANDLING BUILDING |
| 99 | 61P–12 | 68.0' | SOLIDS HANDLING BUILDING |
| 100 | 61P–13 | 68.0' | SOLIDS HANDLING BUILDING |
| 101 | 61P–14 | 68.0' | SOLIDS HANDLING BUILDING |
| 102 | 61P–15 | 68.0' | SOLIDS HANDLING BUILDING |
| 103 | 61P–16 | 68.0' | SOLIDS HANDLING BUILDING |
| 104 | 61P–17 | 68.0' | SOLIDS HANDLING BUILDING |
| 105 | 61P–18 | 68.0' | SOLIDS HANDLING BUILDING |
| 106 | 61P–19 | 68.0' | SOLIDS HANDLING BUILDING |
| 107 | 61P–20 | 68.0' | SOLIDS HANDLING BUILDING |
| 108 | 61P–21 | 68.0' | SOLIDS HANDLING BUILDING |
| 109 | 61P–22 | 68.0' | SOLIDS HANDLING BUILDING |
| 110 | 61P–23 | 68.0' | SOLIDS HANDLING BUILDING |
| 111 | 61P–24 | 68.0' | SOLIDS HANDLING BUILDING |
| 112 | 61P–25 | 68.0' | SOLIDS HANDLING BUILDING |
| 113 | 61P–26 | 68.0' | SOLIDS HANDLING BUILDING |
| 114 | 61P–27 | 68.0' | SOLIDS HANDLING BUILDING |
| 115 | 61P–28 | 68.0' | SOLIDS HANDLING BUILDING |
| 116 | 61P–29 | 68.0' | SOLIDS HANDLING BUILDING |
| 117 | 61P–30 | 68.0' | SOLIDS HANDLING BUILDING |
| 118 | 61P–31 | 68.0' | SOLIDS HANDLING BUILDING |
| 119 | 61P–32 | 68.0' | SOLIDS HANDLING BUILDING |
| 120 | 61P–33 | 68.0' | SOLIDS HANDLING BUILDING |
| 121 | 61P–34 | 68.0' | SOLIDS HANDLING BUILDING |
| 122 | 61P–35 | 68.0' | SOLIDS HANDLING BUILDING |
| 123 | 61P–36 | 68.0' | SOLIDS HANDLING BUILDING |
| 124 | 61P–37 | 68.0' | SOLIDS HANDLING BUILDING |
| 125 | 61P–38 | 68.0' | SOLIDS HANDLING BUILDING |
| 126 | 61P–39 | 68.0' | SOLIDS HANDLING BUILDING |
| 127 | 61P–40 | 68.0' | SOLIDS HANDLING BUILDING |
| 128 | 61P–41 | 68.0' | SOLIDS HANDLING BUILDING |
| 129 | 61P–42 | 68.0' | SOLIDS HANDLING BUILDING |
| 130 | 61P–43 | 68.0' | SOLIDS HANDLING BUILDING |
| 131 | 61P–44 | 68.0' | SOLIDS HANDLING BUILDING |
| 132 | 61P–45 | 68.0' | SOLIDS HANDLING BUILDING |
| 133 | 61P–46 | 68.0' | SOLIDS HANDLING BUILDING |
| 134 | 61P–47 | 68.0' | SOLIDS HANDLING BUILDING |

FOR CONTINUATION SEE SHEET 00S11

PILE SCHEDULE

FILE: 215786–00S10.dwg
DATE: Jun 30, 2015–8:35:11am, jwebb

HDR Engineering, Inc.

| ISSUE | DATE | DESCRIPTION |
|---|---|---|
| A | JUNE 2015 | ISSUED FOR BID |

| | |
|---|---|
| PROJECT MANAGER | C. OLSON |
| | |
| DESIGNED | M. RAMANATHAN |
| DESIGNED | |
| CHECKED | C. OLSON |
| DRAWN | D. ELDREDGE |
| DATE | JUNE 30, 2015 |
| | |
| PROJECT NUMBER | 215786 |

REGISTERED PROFESSIONAL ENGINEER — AMID TAVANGAR — NO. 54655 EXP. 12/31/15 — CIVIL — STATE OF CALIFORNIA — 6/30/15

CITY OF PINOLE CALIFORNIA 1903

PINOLE/HERCULES
WATER POLLUTION
CONTROL PLANT UPGRADE
CLIENT PN

**STRUCTURAL**

**TYPICAL PILE DETAILS AND SCHEDULE**

0 1" 2"

| | |
|---|---|
| FILENAME | 215786–00S10 |
| SCALE | AS NOTED |

SHEET **00S10**

## PILE SCHEDULE (CONTINUED)

| SEQ. NO. | PILE I.D. | PILE TIP ELEVATION | LOCATION |
|---|---|---|---|
| 135 | 61P–48 | 68.0' | SOLIDS HANDLING BUILDING |
| 136 | 61P–49 | 68.0' | SOLIDS HANDLING BUILDING |
| 137 | 61P–50 | 68.0' | SOLIDS HANDLING BUILDING |
| 138 | 61P–51 | 68.0' | SOLIDS HANDLING BUILDING |
| 139 | 61P–52 | 68.0' | SOLIDS HANDLING BUILDING |
| 140 | 61P–53 | 68.0' | SOLIDS HANDLING BUILDING |
| **141** | **61P–54** | **68.0'** | **SOLIDS HANDLING BUILDING** |
| 142 | 61P–55 | 68.0' | SOLIDS HANDLING BUILDING |
| 143 | 61P–56 | 68.0' | SOLIDS HANDLING BUILDING |
| 144 | 61P–57 | 68.0' | SOLIDS HANDLING BUILDING |
| 145 | 61P–58 | 68.0' | SOLIDS HANDLING BUILDING |
| 146 | 61P–59 | 68.0' | SOLIDS HANDLING BUILDING |
| 147 | 61P–60 | 68.0' | SOLIDS HANDLING BUILDING |
| 148 | 61P–61 | 68.0' | SOLIDS HANDLING BUILDING |
| 149 | 61P–62 | 68.0' | SOLIDS HANDLING BUILDING |
| 150 | 75P–1 | 77.0' | CHEMICAL STORAGE AND FEED BUILDING |
| 151 | 75P–2 | 77.0' | CHEMICAL STORAGE AND FEED BUILDING |
| 152 | 75P–3 | 77.0' | CHEMICAL STORAGE AND FEED BUILDING |
| 153 | 75P–4 | 77.0' | CHEMICAL STORAGE AND FEED BUILDING |
| 154 | 75P–5 | 77.0' | CHEMICAL STORAGE AND FEED BUILDING |
| 155 | 75P–6 | 77.0' | CHEMICAL STORAGE AND FEED BUILDING |
| 156 | 75P–7 | 77.0' | CHEMICAL STORAGE AND FEED BUILDING |
| 157 | 75P–8 | 77.0' | CHEMICAL STORAGE AND FEED BUILDING |
| 158 | 75P–9 | 77.0' | CHEMICAL STORAGE AND FEED BUILDING |
| 159 | 75P–10 | 77.0' | CHEMICAL STORAGE AND FEED BUILDING |
| 160 | 75P–11 | 77.0' | CHEMICAL STORAGE AND FEED BUILDING |
| 161 | 75P–12 | 77.0' | CHEMICAL STORAGE AND FEED BUILDING |
| 162 | 75P–13 | 77.0' | CHEMICAL STORAGE AND FEED BUILDING |
| 163 | 75P–14 | 77.0' | CHEMICAL STORAGE AND FEED BUILDING |
| 164 | 75P–15 | 77.0' | CHEMICAL STORAGE AND FEED BUILDING |
| 165 | 75P–16 | 77.0' | CHEMICAL STORAGE AND FEED BUILDING |
| 166 | 75P–17 | 77.0' | CHEMICAL STORAGE AND FEED BUILDING |
| 167 | 75P–18 | 77.0' | CHEMICAL STORAGE AND FEED BUILDING |
| 168 | 75P–19 | 77.0' | CHEMICAL STORAGE AND FEED BUILDING |
| **169** | **75P–20** | **77.0'** | **CHEMICAL STORAGE AND FEED BUILDING** |
| 170 | 75P–21 | 77.0' | CHEMICAL STORAGE AND FEED BUILDING |
| 171 | 75P–22 | 77.0' | CHEMICAL STORAGE AND FEED BUILDING |
| 172 | 75P–23 | 77.0' | CHEMICAL STORAGE AND FEED BUILDING |
| 173 | 75P–24 | 77.0' | CHEMICAL STORAGE AND FEED BUILDING |
| 174 | 75P–25 | 77.0' | CHEMICAL STORAGE AND FEED BUILDING |
| 175 | 75P–26 | 77.0' | CHEMICAL STORAGE AND FEED BUILDING |
| 176 | 75P–27 | 77.0' | CHEMICAL STORAGE AND FEED BUILDING |
| 177 | 75P–28 | 77.0' | CHEMICAL STORAGE AND FEED BUILDING |
| 178 | 75P–29 | 77.0' | CHEMICAL STORAGE AND FEED BUILDING |
| 179 | 75P–30 | 77.0' | CHEMICAL STORAGE AND FEED BUILDING |
| 180 | 75P–31 | 77.0' | CHEMICAL STORAGE AND FEED BUILDING |
| 181 | 75P–32 | 77.0' | CHEMICAL STORAGE AND FEED BUILDING |
| 182 | 75P–33 | 77.0' | CHEMICAL STORAGE AND FEED BUILDING |
| 183 | 75P–34 | 77.0' | CHEMICAL STORAGE AND FEED BUILDING |
| 184 | 75P–35 | 77.0' | CHEMICAL STORAGE AND FEED BUILDING |
| 185 | 75P–36 | 77.0' | CHEMICAL STORAGE AND FEED BUILDING |

## PILE SCHEDULE (CONTINUED)

| SEQ. NO. | PILE I.D. | PILE TIP ELEVATION | LOCATION |
|---|---|---|---|
| 186 | 76P–1 | 77.0' | FERRIC CHLORIDE CHEMICAL STORAGE |
| 187 | 76P–2 | 77.0' | FERRIC CHLORIDE CHEMICAL STORAGE |
| 188 | 76P–3 | 77.0' | FERRIC CHLORIDE CHEMICAL STORAGE |
| 189 | 76P–4 | 77.0' | FERRIC CHLORIDE CHEMICAL STORAGE |
| 190 | 76P–5 | 77.0' | FERRIC CHLORIDE CHEMICAL STORAGE |
| 191 | 76P–6 | 77.0' | FERRIC CHLORIDE CHEMICAL STORAGE |
| 192 | 76P–7 | 77.0' | FERRIC CHLORIDE CHEMICAL STORAGE |
| 193 | 76P–8 | 77.0' | FERRIC CHLORIDE CHEMICAL STORAGE |
| 194 | 76P–9 | 77.0' | FERRIC CHLORIDE CHEMICAL STORAGE |
| 195 | 91P–1 | 77.0' | EFFLUENT PUMP STATION SURGE TANK |
| 196 | 91P–2 | 77.0' | EFFLUENT PUMP STATION SURGE TANK |
| 197 | 91P–3 | 77.0' | EFFLUENT PUMP STATION SURGE TANK |
| 198 | 91P–4 | 77.0' | EFFLUENT PUMP STATION SURGE TANK |
| 199 | 91P–5 | 77.0' | EFFLUENT PUMP STATION SURGE TANK |
| 200 | 91P–6 | 77.0' | EFFLUENT PUMP STATION SURGE TANK |
| 201 | 91P–7 | 77.0' | EFFLUENT PUMP STATION SURGE TANK |
| 202 | 91P–8 | 77.0' | EFFLUENT PUMP STATION SURGE TANK |

### PILE SCHEDULE NOTES:

1. THE PILE CUT OFF ELEVATION IS THE TOP OF THE PILE ELEVATION WITH RESPECT TO ASSUMED REFERENCE GROUND FLOOR EL. TO BE 0.00, IN FEET.
2. SEE DETAILS 1, 2 & 3 ON SHEET 00S10 FOR TYPICAL PILE DETAILS.
3. SEE DRAWING 00S01 THRU 00S09 FOR GENERAL NOTES AND STANDARD DETAILS.
4. PILE NUMBERS WRITTEN WITH BOLD LETTERS REPRESENT INDICATOR PILES.
5. PILES SHOULD BE DRIVEN TO TIP ELEVATIONS PER SCHEDULE, OR TO PRACTICAL REFUSAL.
6. IF REFUSAL OCCURS BEFORE THE HOLE EXTENSION OF 5 FEET (PER DETAIL 1/00S10), CONTACT THE ENGINEER FOR LOCATION OF REPLACEMENT PILE AND REVISED PILE CAP.

PILE SCHEDULE (CONT'D)

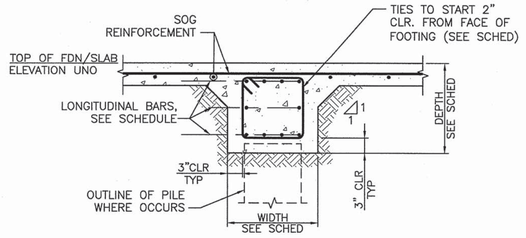


TYPICAL CAP/GRADE BEAM DETAIL

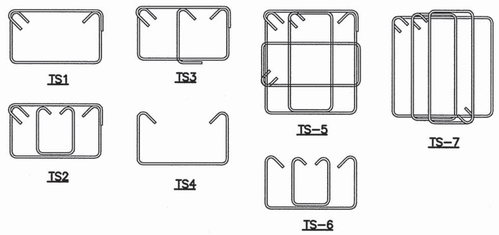


TYPICAL STIRRUP DETAIL

## CONCRETE GRADE BEAM SCHEDULE — f'c=4000 psi

| BEAM MARK SEE PLANS | SIZE "W" (INCH) | SIZE "D" (INCH) | LONGITUDINAL REINFORCEMENT TOP REINF "T" | LONGITUDINAL REINFORCEMENT MIDDLE REINF "M" | LONGITUDINAL REINFORCEMENT BOTT REINF "B" | SHEAR REINFORCEMENT NO. SIZE | SHEAR REINFORCEMENT SPACING (INCH) | SHEAR REINFORCEMENT TYPE | REMARKS |
|---|---|---|---|---|---|---|---|---|---|
| 13GB–1 | 36" | 36" | 6–#8 | – | 6–#8 | #4 | 9" | TS7 | FULL LENGTH OF GRADE BEAM |
| 14GB–1 | 30" | 30" | 4–#8 | – | 4–#8 | #4 | 9" | TS2 | FULL LENGTH OF GRADE BEAM |
| 61GB–1 | 54" | 36" | 8–#8 | – | 8–#8 | #4 | 8" | TS–7 | |
| 61GB–2 | VAR | 36" | 8–#8 | – | 8–#8 | #4 | 8" | TS–7 | 54" TO 36" EXTRA REBARS DEVELOPED IN 61GB–4 |
| 61GB–3 | 36" | 36" | 6–#8 | – | 6–#8 | #4 | 8" | TS–7 | |
| 61GB–4 | 36" | VAR | 6–#8 | – | 6–#8 | #4 | 8" | TS–7 | 42" TO 36" |
| 61GB–5 | 36" | 42" | 6–#8 | – | 6–#8 | #4 | 8" | TS–7 | |
| 61GB–6 | 48" | 42" | 7–#8 | – | 7–#8 | #4 | 8" | TS–7 | |
| 61GB–7 | VAR | 42" | 7–#8 | | 7–#8 | #4 | 8" | TS–7 | 48" TO 36" EXTRA REBARS DEVELOPED IN 61GB–5 |
| | | | | | | | | | |
| | | | | | | | | | |
| | | | | | | | | | |
| | | | | | | | | | |

NOTES:

1. SEE FOUNDATION PLAN FOR GRADE BEAM LOCATION.
2. TOP OF GRADE BEAM ELEV TO MATCH TOP OF SLAB/FOOTING, UNO.
3. LONGITUDINAL REINF SHALL BE CONTINUOUS THRU SUPPORTING SLAB/FOOTINGS.
4. GRADE BEAMS SHALL BE CENTERED WITH PILES/FOOTINGS/COLUMNS UNLESS SPECIFICALLY NOTED OTHERWISE.

## TYPICAL CAP/GRADE BEAM DETAIL AND SCHEDULE

1 / –

SCALE: NTS

## TYPICAL WALL REINFORCEMENT

| WALL MARK | THICK (IN) | VERTICAL BARS | HORIZONTAL BARS | REMARKS |
|---|---|---|---|---|
| 12W–1 | 16" | #7@8" EF | #7@8" EF | – |
| 12W–2 | 12" | #6@8" EF | #6@8" EF | – |
| 12W–3 | 16" | #7@8" EF | #6@8" EF | – |
| 12W–4 | 8" | #6@8" | #5@12" EF | ONE LAYER OF REBARS E.W. |
| 13W–1 | 12" | #6@8" EF | #5@12" EF | – |
| 13W–2 | 18" | #6@8" EF | #5@8" EF | – |
| 13W–3 | 18" | #6@8" EF | #6@8" EF | HORIZ BARS TO BE HOOP REINFORCEMENT |
| 13W–4 | 12" | #6@8" EF | #6@8" EF | HORIZ BARS TO BE HOOP REINFORCEMENT |
| 13W–5 | 8" | #5@8" | #5@12" | – |
| 32W–1 | 12" | #7@8" EF | #5@8" EF | – |
| 32W–2 | 12" | #6@8" EF | #6@8" EF | – |
| 32W–3 | 12" | #7@8" EF | #6@8" EF | – |
| 32W–4 | 12" | #6@8" EF | #5@8" EF | – |
| 32W–5 | 12" | #7@8" EF | #7@8" EF | – |
| 32W–6 | 12" | #5@8" EF | #5@8" EF | – |
| 61W–1 | 12" | #6@8" EF | #6@8" EF | HORIZ REINF BTWN GRIDS 3 & 4 IS #6@6" |
| 71W–1 | 18" | #6@9" EF | #7@9" OF, #6@9 IF | #7@9" OUTSIDE FACE VERT DOWEL |
| 71W–2 | 18" | #6@9" EF | #6@9" EF | – |
| 71W–3 | 18" | #7@9" EF | #7@9" OF, #6@9 IF | #8@9" OUTSIDE FACE VERT DOWEL |

NOTES:

REFER TO STRUCTURAL PLANS FOR SPECIFIC WALL DESIGNATIONS.

## TYPICAL WALL REINFORCEMENT SCHEDULE

2 / –

SCALE: NTS

FILE: 215786–00S11.dwg
DATE: Jun 30, 2015–8:35:17am, jwebb

HDR Engineering, Inc.

| ISSUE | DATE | DESCRIPTION |
|---|---|---|
| A | JUNE 2015 | ISSUED FOR BID |

| | |
|---|---|
| PROJECT MANAGER | C. OLSON |
| DESIGNED | O. TAVANGAR |
| DESIGNED | |
| CHECKED | C. OLSON |
| DRAWN | D. ELDREDGE |
| DATE | JUNE 30, 2015 |
| PROJECT NUMBER | 215786 |

REGISTERED PROFESSIONAL ENGINEER — OMID TAVANGAR — NO. 54655 EXP. 12/31/15 — CIVIL — STATE OF CALIFORNIA — 6/30/15

CITY OF PINOLE CALIFORNIA 1903

PINOLE/HERCULES WATER POLLUTION CONTROL PLANT UPGRADE
CLIENT PN

**STRUCTURAL**

**GRADE BEAM AND CONCRETE WALL SCHEDULES AND DETAILS**

0 1" 2"

| FILENAME | 215786–00S11 |
|---|---|
| SCALE | AS NOTED |

SHEET **00S11**

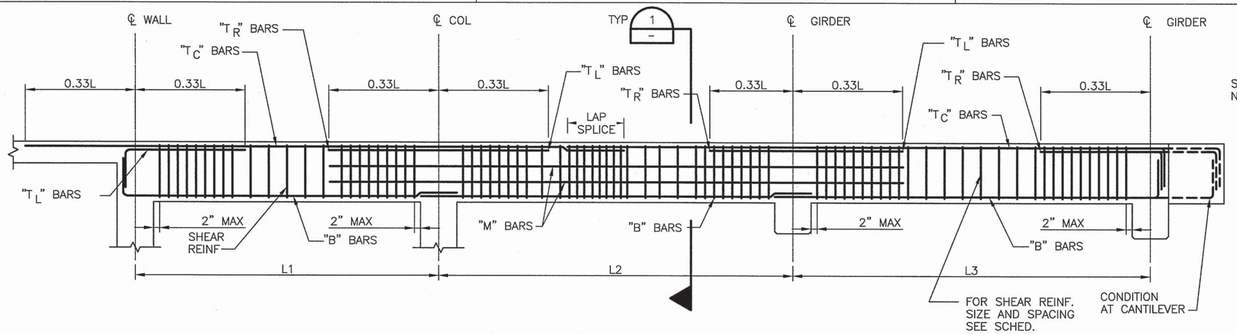


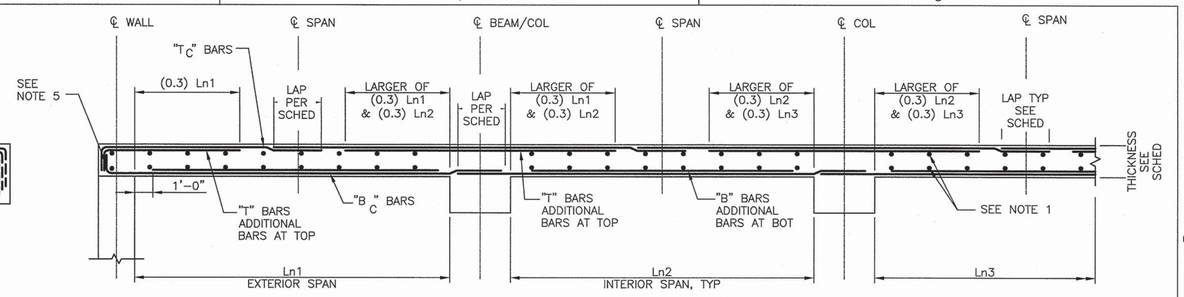


## CONCRETE BEAM SCHEDULE

f'c=4000 psi

| BEAM MARK SEE PLANS | SIZE "W" (INCH) | SIZE "D" (INCH) | TOP REINFORCEMENT LEFT "T L" | TOP REINFORCEMENT CENTER "T C" | TOP REINFORCEMENT RIGHT "T R" | MIDDLE REINF "M" | BOTT REINF "B" | SHEAR REINFORCEMENT NO. SIZE | SHEAR REINFORCEMENT SPACING (INCH) | SHEAR REINFORCEMENT TYPE | REMARKS |
|---|---|---|---|---|---|---|---|---|---|---|---|
| 12BM–1 | 16 | 28 | – | 3–#8 | – | – | 3–#8 | #4 | 8" | TS1 | – |
| 32BM–1 | 12 | 22 | – | 3–#6 | – | – | 3–#6 | #4 | 8" | TS1 | – |
| | | | | | | | | | | | |
| 32BM–3 | 16 | 16 | – | 3–#6 | – | – | 3–#6 | #4 | 8" | TS1 | – |
| 61BM–1 | 24 | 24 | 2–#6 | 4–#6 | 2–#6 | 4–#6 | 4–#6 | #4 | 8" | TS1 | SEE DETAILS |
| 61BM–2 | 24 | 24 | 2–#6 | 4–#6 | 2–#6 | – | 4–#6 | #4 | 8" | TS2 | – |
| 61BM–3 | 24 | 42 | 8–#9 | 4–#9 | 8–#9 | 4–#9 | 8–#8 | #4 | 8" | TS2 | TOP & BOTTOM REBARS IN (2) LAYERS |
| 61BM–4 | 24 | 24 | 2–#8 | 4–#8 | 2–#8 | – | 4–#8 | #4 | 8" | TS2 | – |
| 61BM–5 | 12 | 16 | – | 3–#6 | – | – | 3–#6 | #4 | 8" | TS1 | – |
| 71BM–1 | 12 | 18 | – | 2–#6 | – | – | 2–#6 | #4 | 24" | TS1 | – |
| | | | | | | | | | | | |
| | | | | | | | | | | | |
| | | | | | | | | | | | |
| | | | | | | | | | | | |
| | | | | | | | | | | | |
| | | | | | | | | | | | |
| | | | | | | | | | | | |
| | | | | | | | | | | | |
| | | | | | | | | | | | |
| | | | | | | | | | | | |
| | | | | | | | | | | | |

### CONC. BEAM NOTES:

1. SLAB REINFORCEMENT NOT SHOWN FOR CLARITY.
2. THE TOP REINFORCEMENT OF TWO ADJACENT BEAMS AT THE COMMON END WILL BE GOVERNED BY THE LARGER OF THE TWO.
3. "M" BARS SCHEDULED ARE TOTAL REQUIRED. PROVIDE 1/2 OF "M" BARS EACH SIDE OF BEAM.
4. ALL LONGITUDINAL BARS SHALL BE CONTINUOUS WITH STANDARD HOOK AT ENDS.
5. "LEFT" IS DEFINED AS NORTH OR WEST END AND "RIGHT" IS DEFINED AS SOUTH OR EAST END OF CONCRETE BEAMS.
6. TOP AND BOTTOM BARS SHALL BE CONTINUOUS FROM WALL TO WALL/CANTILEVER.
7. DEPTH SHOWN IS FOR MINIMUM. SEE DETAILS FOR MAXIMUM DEPTH.

### CONC. SLAB NOTES:

1. TRANSVERSE BARS (TEMPERATURE REINFORCEMENT)
2. ALL BARS AND CONTINUOUS BARS SHALL BE IN THE SAME PLANE UNLESS NOTED OTHERWISE.
3. IN PLACEMENT OF REINFORCING, "Tc" & "T" BARS AND "Bc" & "B" BARS SHALL BE ALTERNATED TO ACHIEVE UNIFORM DISTRIBUTION AND SPACING.
4. THE LARGER QUANTITY OF "T" BARS FOR TWO ADJACENT SLAB MARKS WILL GOVERN THE "T" BARS FOR BOTH SLABS.
5. HOOK BOTTOM BARS AT EXTERIOR SUPPORTS.
6. SLABS ARE NOTED AS XXS–X ON PLANS.
7. FOR ADDITIONAL REBAR PLACEMENT INFO SEE SHEETS S19 THRU S29.

## CONCRETE SLAB SCHEDULE

f'c=4000 psi

| SLAB MARK SEE PLANS | THICK (INCH) | TOP REINFORCEMENT CONTIN "Tc" | TOP REINFORCEMENT ADDITIONAL "T" EXTERIOR SUPPORT | TOP REINFORCEMENT ADDITIONAL "T" INTERIOR SUPPORT | BOTTOM REINFORCEMENT CONTIN "Bc" | BOTTOM REINFORCEMENT ADDITIONAL "B" | TEMPERATURE REINFORCEMENT TOP & BOTTOM | REMARKS |
|---|---|---|---|---|---|---|---|---|
| 13S–1 | 8" | #5@8" | – | – | #5@8" | – | #5@8" | – |
| 13S–2 | 36" | #5@8" | – | – | #5@8" | – | #5@8" | – |
| 14S–1 | 12" | #7@12" | – | – | #7@12" | – | #5@12" | – |
| 32S–1 | 12" | #6@8" | – | – | #6@8" | – | #5@8" | – |
| 32S–2 | 18" | #7@8" | – | – | #7@8" | – | #6@8" | – |
| 32S–3 | 10" | #5@8" | – | – | #5@8" | – | #5@8" | – |
| 32S–4 | 16" | #7@8" | – | – | #7@8" | – | #7@8" | – |
| 61S–1 | 41" | #7@8" | – | – | #7@8" | – | #7@8" | – |
| 61S–2 | VAR | #7@8" | – | – | #7@8" | – | #7@8" | SEE SECTION A FOR THICKNESS |
| 61S–3 | 15" | #7@8" | – | – | #7@8" | – | #5@8" | – |
| 61S–4 | 12" | #7@8" | – | – | #7@8" | – | #5@8" | – |
| 61S–5 | 12" | #6@8" | #5@8" | – | #6@8" | – | #5@8" | #7@8" ADD'L TOP REINF @ GRID 3 |
| 71S–1 | 12" | #5@12" | – | – | #5@12" | – | #5@12" | – |

## ONE–WAY SLAB REINFORCING DETAIL AND SCHEDULE

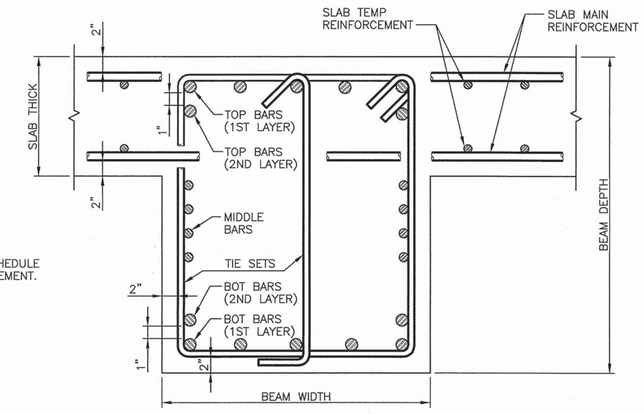


NOTES:

1. SEE DETAIL AND SCHEDULE FOR ALL REINFORCEMENT.

## BAR PLACEMENT DETAIL

NTS

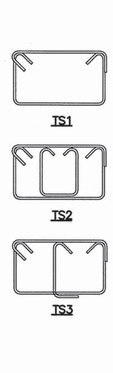


## STIRRUP DETAIL

## CONCRETE BEAM REINFORCING DETAIL AND SCHEDULE

FILE: 215786–00S12.dwg
DATE: Jun 30, 2015–8:35:20am, jwebb

HDR Engineering, Inc.

| ISSUE | DATE | DESCRIPTION |
|---|---|---|
| A | JUNE 2015 | ISSUED FOR BID |

| | |
|---|---|
| PROJECT MANAGER | C. OLSON |
| DESIGNED | M. RAMANATHAN |
| DESIGNED | |
| CHECKED | C. OLSON |
| DRAWN | D. ELDREDGE |
| DATE | JUNE 30, 2015 |
| PROJECT NUMBER | 215786 |

REGISTERED PROFESSIONAL ENGINEER — OMID TAVANGAR — NO. 54655 EXP. 12/31/15 — CIVIL — STATE OF CALIFORNIA — 6/30/15

CITY OF PINOLE CALIFORNIA 1903

PINOLE/HERCULES
WATER POLLUTION
CONTROL PLANT UPGRADE
CLIENT PN

**STRUCTURAL**

**TYPICAL CONCRETE BEAM / SLAB DETAILS AND SCHEDULE**

0 1" 2"

| | |
|---|---|
| FILENAME | 215786–00S12 |
| SCALE | AS NOTED |

SHEET **00S12**

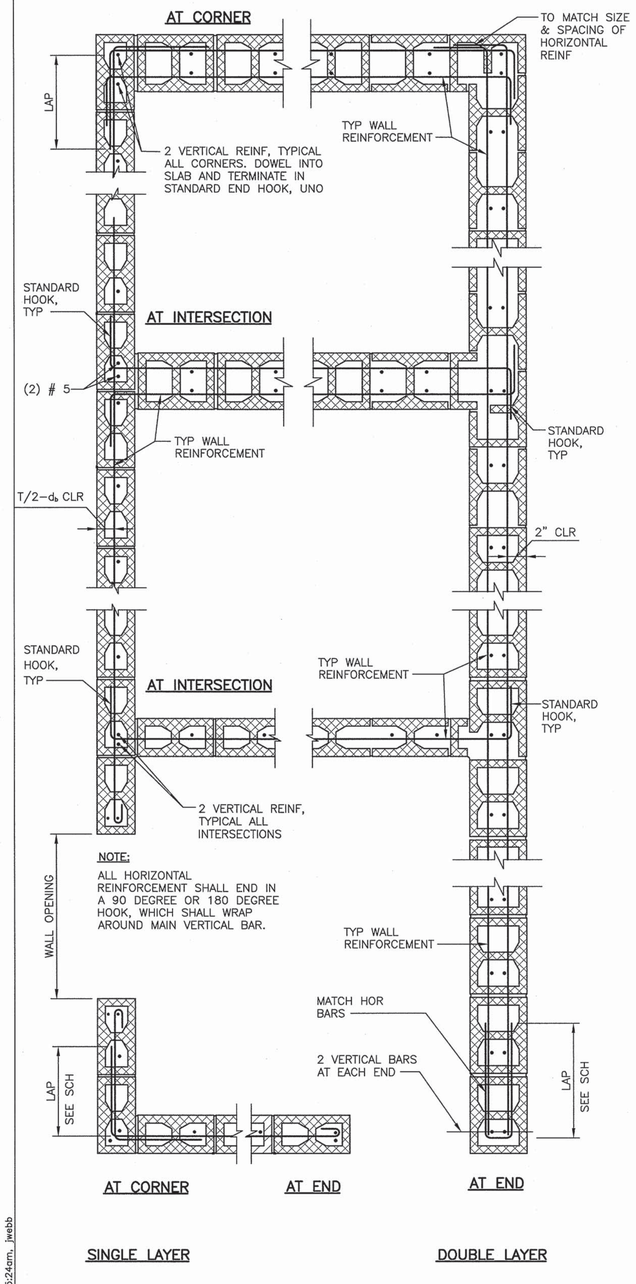


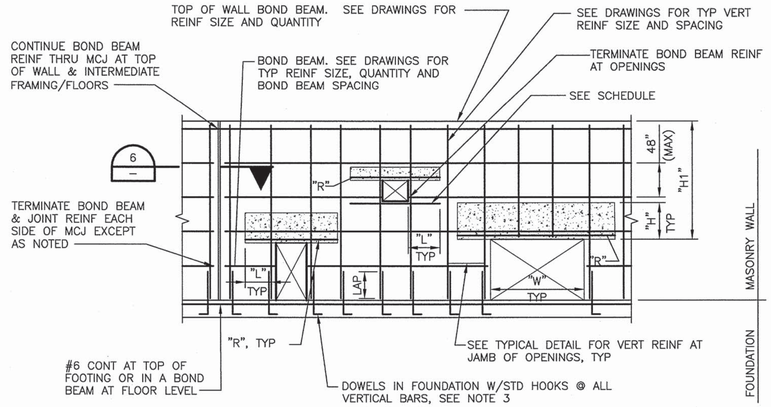


WALL ELEVATION

NOTES:

1. ONLY LINTEL GROUT IS SHOWN. GROUT SOLID ALL CELLS. SEE CMU WALL REINF SCHEDULE.
2. PROVIDE BOND BEAM AT ALL ELEVATED FLOORS WITH SAME REINFORCING AS TOP OF WALL, UNO.
3. STRAIGHT BARS EMBEDDED ONE CONCRETE LAP LENGTH INTO CONC FOUNDATION MAY BE USED AT CONTRACTOR'S OPTION.
4. "H" SHALL NOT BE SPLICED.
5. SHORE LINTEL MINIMUM 7 DAYS AFTER GROUTING.
6. LAP SEE DETAIL 4/–.

## CMU REINFORCING SEISMIC DESIGN CATEGORY "D" AND ABOVE

2 / –

NTS

| TYPE | REINFORCING LOCATION | 12" WALL THK |
|---|---|---|
| VERTS | VERTICAL BARS | 1–#5@16" OC CENTERED, UNO |
| | JAMBS | 2–#7 UNO |
| | CORNERS/INTERSECTIONS | 2–#5 SEE DETAIL 1 |
| | MCJ | 2–#5 DOUBLE CENTERED EA SIDE, UNO PER DETAILS 1&2 |
| HORIZ | TOP OF WALL BOND BEAMS | 2–#5 |
| | HORIZ JOINT REINF | 9 GAGE WIRE, JOINT REINF AT 16" VERT SPACING BETWEEN BOND BEAMS |
| | BELOW OPENINGS | 2–#5 |
| | LINTELS | TYP, SEE DETAIL 5 |
| | INTERMEDIATE BOND BEAMS | 1–#5@24" OC VERT SPACING |

NOTES:

1. PROVIDE REINFORCING NOTED FOR ALL MASONRY WALLS UNLESS OTHERWISE NOTED ON DRAWINGS.
2. MAINTAIN MINIMUM 3"x3" CONTINUOUS VERTICAL CELL AT EACH REBAR. PLACE WALLS TO MAXIMUM 4'–0" HEIGHT BEFORE GROUTING.
3. PLACE REBAR IN WALL WITH LAP LENGTH PER DETAIL 4.
4. GROUT ALL CELLS. LOCATE TWO VERTICAL RUN OF REINFORCEMENT AT ALL CORNERS AND EACH SIDE OF ALL MASONRY MCJ'S.
5. PROVIDE WIRE REBAR POSITIONERS TO HOLD BARS IN PLACE.
6. STOP GROUT POUR 1/2" BELOW TOP OF COURSE AT EACH GROUT LIFT.
7. VERTICAL BARS SHALL NOT BE SPLICES EXCEPT AT FLOOR LEVEL. USE OF OPEN ENDED CMU UNITS ARE ACCEPTABLE.

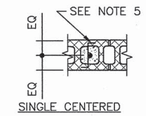


SINGLE CENTERED

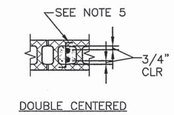


DOUBLE CENTERED

## CMU REINFORCING SCHEDULE

3 / –

NTS

| MASONRY LAP SPLICE LENGTHS : f'm=1,500 psi, fy=60,000 psi | | | | | | | |
|---|---|---|---|---|---|---|---|
| BAR SIZE | 6" CMU | 8" CMU | | 10" CMU | | 12" CMU | |
| | BAR @ CL | BAR @ CL | BAR @ EDGE | BAR @ CL | BAR @ EDGE | BAR @ CL | BAR @ EDGE |
| #3 | 2'–0" | 2'–0" | 2'–0" | 2'–0" | 2'–0" | 2'–0" | 2'–0" |
| #4 | 2'–1" | 2'–1" | 2'–7" | 2'–1" | 2'–5" | 2'–1" | 2'–4" |
| #5 | 3'–3" | 2'–7" | 4'–0" | 2'–7" | 3'–10" | 2'–7" | 3'–7" |
| #6 | – | 4'–9" | 8'–2" | 4'–4" | 7'–8" | 4'–4" | 7'–3" |
| #7 | – | 6'–7" | – | 5'–1" | 10'–5" | 5'–1" | 9'–10" |

NOTES:

1. WHEN REQUIRED SPLICE LENGTH EXCEEDS 4'–8" – USE MECHANICAL TENSION SPLICES WITH LOW LIFT GROUTING.

## MASONRY REINFORCING SPLICE TABLE

4 / –

NTS

| LINTEL REINFORCEMENT SCHEDULE | | | | | | |
|---|---|---|---|---|---|---|
| MARK | "W" | "R" | "L" | "H" | STIRRUPS | REMARKS |
| ML–1 | 1'–4" THRU 3'–4" | 1–#5 | 25" | 8" | – | |
| ML–2 | 1'–4" THRU 3'–4" | 2–#5 | 25" | 16" | – | |
| ML–3 | 3'–5" THRU 6'–8" | 2–#5 | 25" | 24" | – | |
| ML–4 | 6'–9" THRU 10'–0" | 2–#6 | 30" | 32" | – | |
| ML–5 | 10'–1" THRU 12'–0" | 2–#7 | 35" | 40" | #3@16" | |
| ML–6 | 12'–1" THRU 14'–0" | 2–#7 | 35" | 40" | #3@8" | |

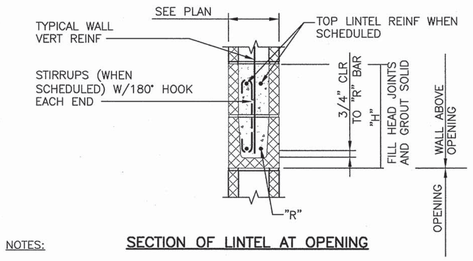


NOTES:

SECTION OF LINTEL AT OPENING

1. OPENINGS 8" OR LESS WIDE MAY OCCUR WITHOUT LINTEL REINFORCING AS LONG AS NO REINFORCING IS INTERRUPTED.
2. ML–1 TO BE USED ONLY AT NON–LOAD BEARING SITUATIONS.
3. SEE DRAWINGS FOR LINTEL TYPES. WHERE LINTEL TYPES ARE NOT SHOWN PROVIDE LINTELS FROM THE ABOVE SCHEDULE BASED ON THICKNESS OF WALL AND MAX CLEAR OPENING SIZE AND VERIFY LINTEL TYPE W/ENGINEER PRIOR TO CONSTRUCTION.

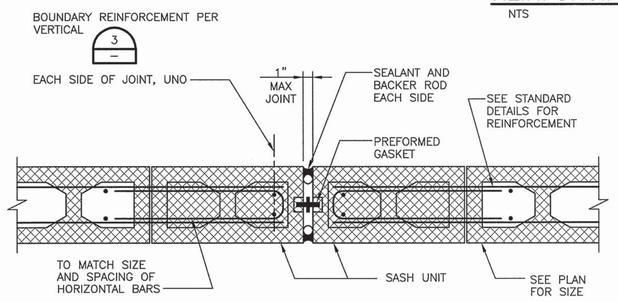


NOTES:

1. CONDITION SHOWN FOR TWO LAYERS OF REINFORCEMENT. FOR ONE LAYER CONDITION, HOOK HORIZONTAL REINF AT JOINT AND ELIMINATE ⊐ BARS.
2. NO HORIZONTAL REINFORCEMENT SHALL EXTEND THROUGH THE JOINT EXCEPT AS SHOWN IN TYPICAL CMU WALL ELEVATION.
3. MAXIMUM JOINT SPACING SHALL BE 24 FT. UNLESS SPECIFICALLY SHOWN OTHERWISE.

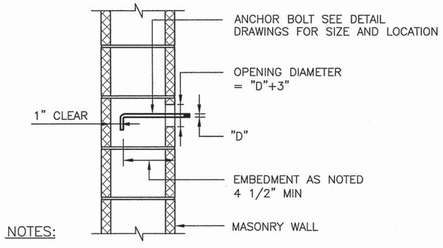


NOTES:

1. SET ANCHOR BOLTS WITH TEMPLATE.
2. CUT BLOCK WEB AS REQUIRED TO ALLOW PLACEMENT OF ANCHOR BOLT WITH 1/2" MINIMUM GROUT BETWEEN ANCHOR BOLT AND BLOCK.

## REINFORCEMENT AT CMU WALL

1 / –

NTS

## CMU LINTEL SCHEDULE

5 / –

NTS

## MASONRY CONTROL JOINT (MCJ)

6 / –

NTS

## ANCHOR BOLT IN MASONRY

7 / –

NTS

FILE: 215786–00S13.dwg
DATE: Jun 30, 2015–8:35:24am, jwebb

HDR Engineering, Inc.

| ISSUE | DATE | DESCRIPTION |
|---|---|---|
| A | JUNE 2015 | ISSUED FOR BID |

| | |
|---|---|
| PROJECT MANAGER | C. OLSON |
| | |
| DESIGNED | M. RAMANATHAN |
| DESIGNED | |
| CHECKED | C. OLSON |
| DRAWN | D. ELDREDGE |
| DATE | JUNE 30, 2015 |
| | |
| PROJECT NUMBER | 215786 |

REGISTERED PROFESSIONAL ENGINEER
CHRISTOPHER D. TAYLOR
NO. 54655
EXP. 12/31/15
CIVIL
STATE OF CALIFORNIA
6/30/15

CITY OF PINOLE CALIFORNIA 1903

PINOLE/HERCULES
WATER POLLUTION
CONTROL PLANT UPGRADE
CLIENT PN

**STRUCTURAL**

**TYPICAL MASONRY DETAILS**

0 1" 2"

| FILENAME | 215786–00S13 |
|---|---|
| SCALE | AS NOTED |

SHEET 00S13

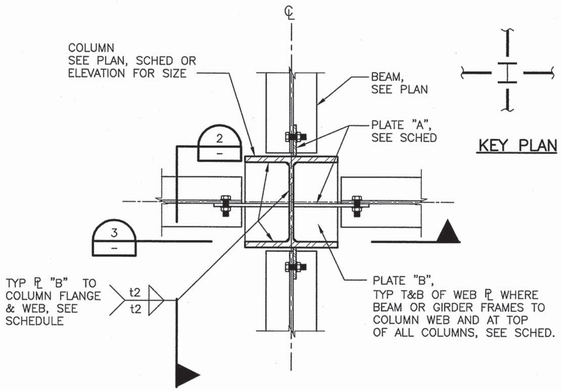





## PLAN SECTION AT NON–FRAME COLUMN 1

NTS

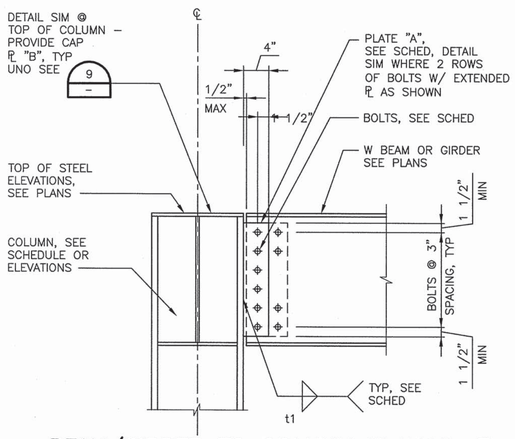


## BEAM/GIRDER TO COLUMN FLANGE 2

NTS

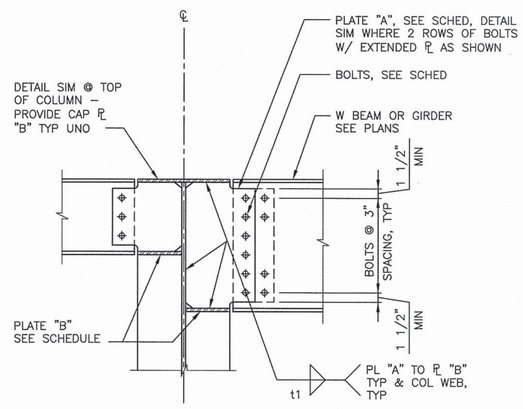


## BEAM/GIRDER TO COLUMN WEB 3

NTS

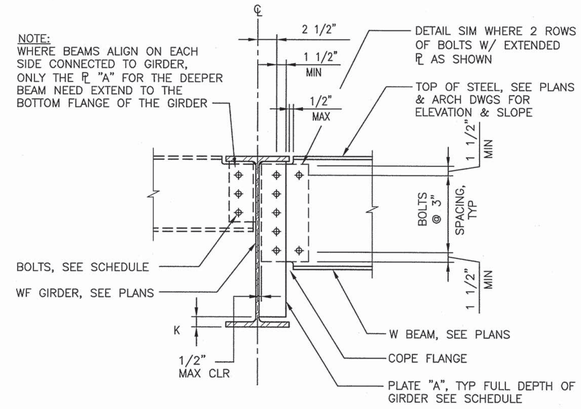


## BEAM TO GIRDER 4

NTS

| COLUMN SCHEDULE Fy = 50,000 PSI | | |
|---|---|---|
| COLUMN MARK | SIZE | DOUBLER ℄ NO. OF SIDES – THICK |
| 12C–1 | W12x45 | – |
| 12C–2 | W12x53 | – |
| 61C–3 | W12x87 | – |

## COLUMN SCHEDULE 5

NTS

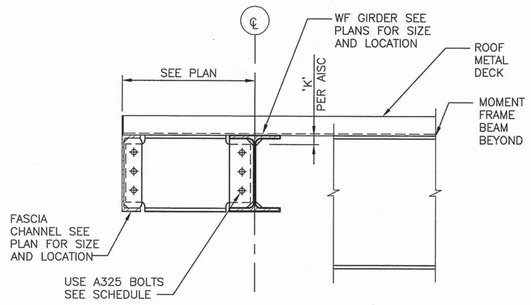


## ROOF OVERHANG 6

NTS

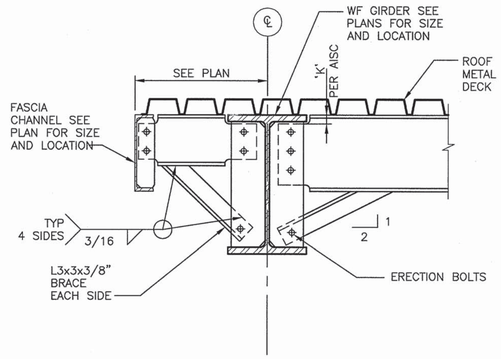


## GIRDER BRACE 7

NTS

| | | BEAM–TO–GIRDER CONNECTIONS | | | | | BEAM–TO–COLUMN CONNECTIONS | | | | |
|---|---|---|---|---|---|---|---|---|---|---|---|
| BEAM/ GIRDER SIZE | BOLT TYPE & SIZE UNO (4) | PLATE "A" THICKNESS [IN] (1) | PLATE "B" THICKNESS [IN] | WELD t1 [IN] | WELD t2 [IN] | QUANTITY OF BOLTS REQD (2,3) | PLATE "A" THICKNESS (IN) | PLATE "B" THICKNESS (IN) | WELD t1 (IN) | WELD t2 (IN) | QUANTITY OF BOLTS REQD (2,3) |
| C8, C12 W8, W10 | 3/4"ø A325–N | 3/8 | 1/2 | 1/4 | 1/4 | 2 | 3/8 | 1/2 | 1/4 | 1/4 | 2 |
| W12, W14 | 7/8"ø A325–N | 3/8 | 1/2 | 1/4 | 1/4 | 3 | 3/8 | 1/2 | 1/4 | 1/4 | 3 |
| W16 | 7/8"ø A325–N | 3/8 | 1/2 | 1/4 | 1/4 | 4 | 1/2 | 1/2 | 5/16 | 5/16 | 4 |
| W18 | 7/8"ø A325–N | 3/8 | 1/2 | 1/4 | 1/4 | 5 | 1/2 | 1/2 | 5/16 | 5/16 | 7 |
| W21 | 7/8"ø A325–N | 1/2 | 1/2 | 5/16 | 5/16 | 6 | 1/2 | 1/2 | 5/16 | 5/16 | 8 |
| W24 | 7/8"ø A325–N | 1/2 | 1/2 | 5/16 | 5/16 | 7 | 3/4 | 5/8 | 3/8 | 3/8 | 9 |

CONNECTION NOTES:

1. AT BEAM TO GIRDER MOMENT CONNECTIONS, THICKNESS OF PLATE "A" = SCHEDULED THICKNESS + 1/4".
2. AT BEAM TO GIRDER MOMENT CONNECTIONS, QUANTITY OF BOLTS REQD = SCHEDULED VALUE + 3 MINIMUM. WHERE 2 ROWS OF BOLTS REQUIRED, FILL ROW CLOSEST TO GIRDER WEB.
3. TO BEAM END FIRST W/ BALANCE OF BOLTS PLACED IN 2ND ROW W/ EQUAL NUMBER OF BOLTS TOP & BOTTOM OF CONNECTION PLATE – SEE 2 – 3 – 4 –
4. PROVIDE A325–SC BOLTS AT ALL BEAMS CONNECTED TO BRACING DIAGONALS.

## BEAM/GIRDER CONNECTION SCHED 9

NTS

FILE: 215786–00S14.dwg
DATE: Jun 30, 2015–8:35:28am, jwebb

HDR Engineering, Inc.

| ISSUE | DATE | DESCRIPTION |
|---|---|---|
| A | JUNE 2015 | ISSUED FOR BID |

| | |
|---|---|
| PROJECT MANAGER | C. OLSON |
| | |
| DESIGNED | O. TAVANGAR |
| DESIGNED | |
| CHECKED | O. TAVANGAR |
| DRAWN | D. ELDREDGE |
| DATE | JUNE 30, 2015 |
| | |
| PROJECT NUMBER | 215786 |

REGISTERED PROFESSIONAL ENGINEER
OMID TAVANGAR
NO. 54655
EXP. 12/31/15
CIVIL
STATE OF CALIFORNIA
6/30/15

CITY OF PINOLE CALIFORNIA 1903

PINOLE/HERCULES
WATER POLLUTION
CONTROL PLANT UPGRADE
CLIENT PN

**STRUCTURAL**

**TYPICAL STEEL DETAILS - I**

0 1" 2"

| | |
|---|---|
| FILENAME | 215786–00S14 |
| SCALE | AS NOTED |

SHEET **00S14**

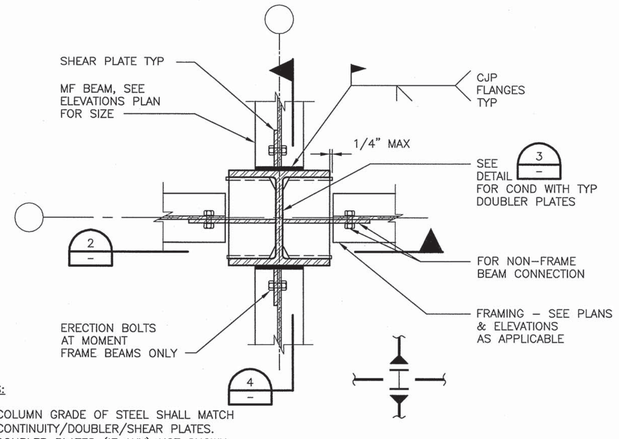


NOTES:

1. COLUMN GRADE OF STEEL SHALL MATCH CONTINUITY/DOUBLER/SHEAR PLATES.
2. DOUBLER PLATES (IF ANY) NOT SHOWN FOR CLARITY.

## TYPICAL SPECIAL MOMENT RESISTING FRAME BEAM/COLUMN CONNECTION (SMRF). WELDED UNREINFORCED FLANGE-WELDED WEB (WUF-W) CONNECTION DEFINED PER ASCE 358 (1)

NTS

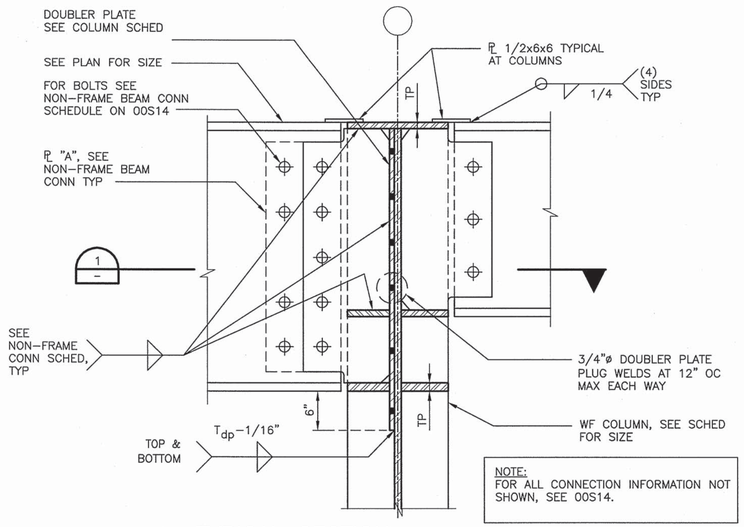


NOTE:
FOR ALL CONNECTION INFORMATION NOT SHOWN, SEE 00S14.

## TYPICAL SECTION AT NON FRAME BEAMS (2)

NTS

SMRF NOTES:

1. CJP GROOVE WELD AT TOP & BOTTOM FLANGES. AT BOTTOM FLANGE REMOVE WELD BACKING, BACKGOUGE AND ADD 5/16" MINIMUM FILLET WELD, WITH WELD: QC/QA CATEGORY AH/T. AT TOP FLANGE DO NOT REMOVE BACKING, BUT ADD 5/16" MINIMUM FILLET WELD BETWEEN BACKING AND COLUMN, WITH WELD QC/QA CATEGORY AH/T
2. CJP GROOVE WELD FULL LENGTH OF WEB BETWEEN WELD ACCESS HOLES. PROVIDE NON-FUSIBLE WELD TABS. REMOVE WELD TABS AFTER WELDING AND GRIND END OF WELD SMOOTH AT WELD ACCESS HOLE. WELD: QC/QA CATEGORY BH/T.
3. SHEAR TAB TO MATCH BEAM WEB THICKNESS, LENGTH SHALL BE SO TO ALLOW OVERLAP WITH THE WELD ACCESS HOLE AT TOP AND BOTTOM, AND THE WIDTH SHALL EXTEND 2" MINIMUM BACK ALONG THE BEAM, BEYOND THE END OF THE WELD ACCESS HOLE, (SEE DETAIL 6).
4. FULL-DEPTH PARTIAL PENETRATION FROM FAR SIDE. WELD: QC/QA CATEGORY BM/T.
5. FILLET WELD SHEAR TAB TO BEAM WEB. WELD SIZE SHALL BE EQUAL TO THICKNESS OF SHEAR TAB MINUS 1/16". WELD SHALL EXTEND OVER THE SHEAR TAB ENTIRE HEIGHT AND ACROSS THE TOP AND BOTTOM. WELD: QC/QA CATEGORY BL/L.
6. 2-3/4"ø ERECTION BOLTS EACH END.
7. CJP TYPICAL WELD: QC/QA CATEGORY BM/T. FOR EXTERIOR BEAM-COLUMN CONNECTIONS (BEAM ONE SIDE ONLY), WELD OF CONTINUITY PLATE TO COLUMN FLANGE AT FREE SIDE MAY BE FILLET WELDS AT TOP AND BOTTOM FACE OF PLATE.
8. UNLESS A THICKER OR WIDER CONTINUITY PLATE IS SHOWN ELSEWHERE, THE MINIMUM WIDTH SHALL EXTEND FLUSH WITH COLUMN FLANGES AND THICKNESS TO MATCH LARGER OF THE FOLLOWING: OF CONTINUITY PL T&B - THICKNESS "TP" OF PL EQUAL TO THE MAXIMUM OF THE FOLLOWING:
   (1) TF + 1/8" OF MOMENT GIRDER FRAMING INTO COL FLANGE.
   (2) 1/2"
9. REMOVE WELD TABS TO 1/4" MAX FROM EDGE OF CONTINUITY PLATE. GRIND END OF WELD SMOOTH (500 MICRO-IN), NOT FLUSH. DO NOT GOUGE COLUMN FLANGE.
10. ALL WELD METAL FOR MOMENT FRAMES SHALL HAVE CHARPY NOTCH TOUGH PROPERTIES OF 20 LB-FT AT -20 DEGREES FAHRENHEIT AND 40 LB-FT AT 70° FAHRENHEIT.
11. CJP GROOVE WELD AT TOP AND BOTTOM CONTINUITY PLATES, DO NOT REMOVE BACKING, BUT ADD 5/16" MINIMUM FILLET WELD BETWEEN BACKING AND COLUMN FLANGE/WEB, WITH WELD QC/QA CATEGORY OF BM/T.
12. SEE FEMA-353, RECOMMENDED SPECIFICATIONS AND QUALITY ASSURANCE GUIDELINES FOR STEEL MOMENT-FRAME CONSTRUCTION FOR SEISMIC APPLICATIONS AND, FOR FABRICATION DETAILS INCLUDING CUTTING METHODS AND SMOOTHNESS REQUIREMENTS.
13. ALL WELDERS PERFORMING RESTRICTED ACCESS HOLE SHALL BE QUALIFIED IN ACCORDANCE TO FEMA 353 FIGURE B-1.

## WUF-W (DEFINED PER ASCE 358) MOMENT FRAME CONNECTION NOTES (5)

NTS

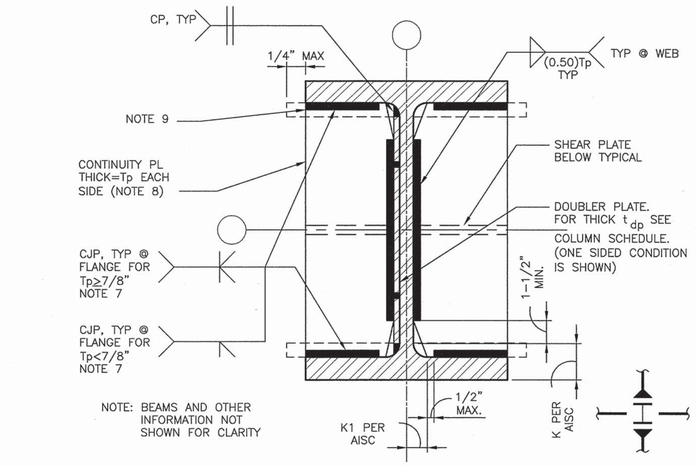


## CONTINUITY AND DOUBLER PLATE DETAILS (3)

NTS

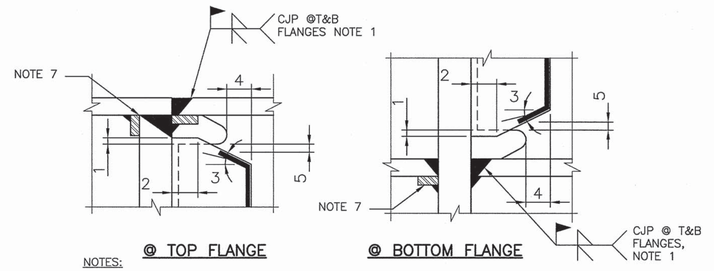


NOTES:

1. 1/4" MINIMUM, 1/2" MAXIMUM.
2. 1" MINIMUM.
3. 30 DEGREES (+/- 10 DEGREES).
4. 2"MINIMUM.
5. 1/2 MINIMUM DISTANCE, 1" MAXIMUM DISTANCE, FROM END OF FILLET WELD TO EDGE OF WELD ACCESS HOLE.

## TYPICAL SMFR CONNECTION DETAILS (6)

NTS

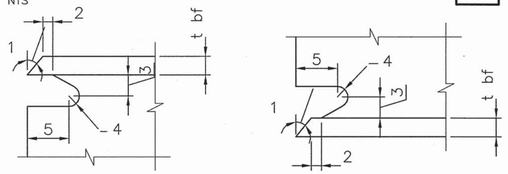


NOTES:

1. BEVEL AS REQUIRED BY AWS D1.1 FOR SELECTED GROOVE WELD PROCEDURE.
2. LARGER OF tbf OR 1/2". (PLUS 1/2*tbf , OR MINUS 1/4*tbf).
3. 3/4*tbf TO tbf, 3/4" MINIMUM (± 1/4").
4. 3/8" MINIMUM RADIUS. (PLUS NOT LIMITED, OR MINUS 0).
5. 3*tbf (±1/2").

## TYPICAL WELD ACCESS HOLE DETAIL (7)

NTS




NOTE:
FOR ALL CONNECTION INFORMATION NOT SHOWN, SEE 00S14.

@ COLUMN FLANGE

## TYPICAL SECTION AT FRAME BEAMS (4)

NTS

FILE: 215786-00S15.dwg
DATE: Jun 30, 2015-8:35:32am, jwebb

HDR Engineering, Inc.

| ISSUE | DATE | DESCRIPTION |
|---|---|---|
| A | JUNE 2015 | ISSUED FOR BID |

| | |
|---|---|
| PROJECT MANAGER | C. OLSON |
| | |
| DESIGNED | O. TAVANGAR |
| DESIGNED | |
| CHECKED | O. TAVANGAR |
| DRAWN | D. ELDREDGE |
| DATE | JUNE 30, 2015 |
| | |
| PROJECT NUMBER | 215786 |

REGISTERED PROFESSIONAL ENGINEER OMID TAVANGAR NO. 54655 EXP. 12/31/15 CIVIL STATE OF CALIFORNIA 6/30/15

CITY OF PINOLE CALIFORNIA 1903

PINOLE/HERCULES
WATER POLLUTION
CONTROL PLANT UPGRADE
CLIENT PN

**STRUCTURAL**

**TYPICAL STEEL DETAILS - II**

0 1" 2"

| FILENAME | 215786-00S15 |
|---|---|
| SCALE | AS NOTED |

SHEET **00S15**

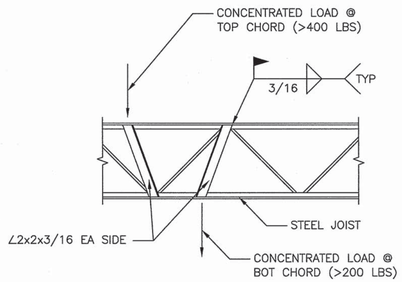


NOTE:

1. PROVIDE REINFORCEMENT WHEN CONCENTRATED LOAD IS MORE THAN 4" FROM PANEL JOINT.

## TYPICAL JOIST REINFORCEMENT AT CONCENTRATED LOAD DETAIL

1 / –

NTS

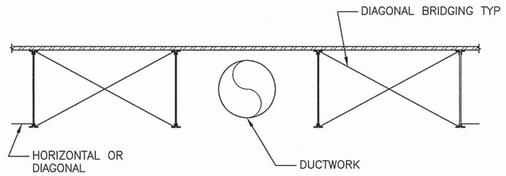


NOTES:

1. USE ONLY WHERE DUCTS ARE SHOWN BETWEEN JOISTS ON MECHANICAL SHEETS. VERIFY LOCATION WITH CONTRACTOR.
2. DO NOT INSTALL DUCTS IN TWO ADJACENT JOISTS SPACES.

## TYPICAL INTERRUPTION OF BRIDGING AT DUCTWORK DETAIL

2 / –

NTS

FILE: 215786-00S16.dwg
DATE: Jun 30, 2015-8:35:36am, jwebb

HDR Engineering, Inc.

| ISSUE | DATE | DESCRIPTION |
|---|---|---|
| A | JUNE 2015 | ISSUED FOR BID |

| | |
|---|---|
| PROJECT MANAGER | C. OLSON |
| DESIGNED | M. RAMANATHAN |
| DESIGNED | |
| CHECKED | C. OLSON |
| DRAWN | D. ELDREDGE |
| DATE | JUNE 30, 2015 |
| PROJECT NUMBER | 215786 |

REGISTERED PROFESSIONAL ENGINEER
DAVID J. TAVANGAR
NO. 54655
EXP. 12/31/15
CIVIL
STATE OF CALIFORNIA
6/30/15

CITY OF PINOLE CALIFORNIA 1903

PINOLE/HERCULES
WATER POLLUTION
CONTROL PLANT UPGRADE
CLIENT PN

**STRUCTURAL**

**TYPICAL STEEL DETAILS - III**

0 1" 2"

| | |
|---|---|
| FILENAME | 215786-00S16 |
| SCALE | AS NOTED |

SHEET **00S16**

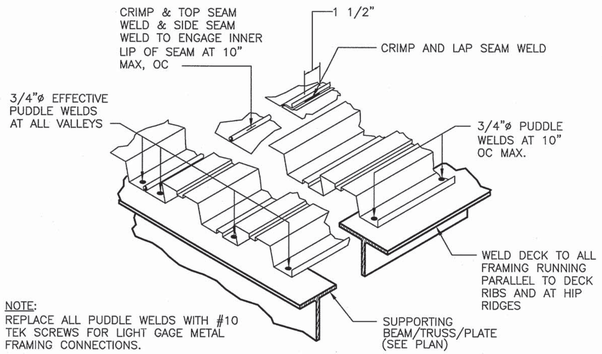


NOTE:
REPLACE ALL PUDDLE WELDS WITH #10 TEK SCREWS FOR LIGHT GAGE METAL FRAMING CONNECTIONS.

## METAL DECK WELDING
NTS 1

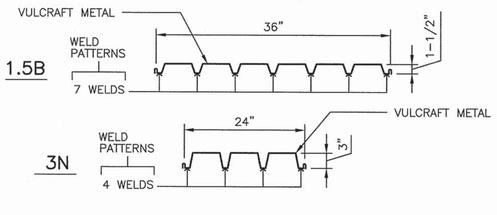


FOR DECK WELDS, SEE 1

| APPLICATION | DEPTH | VULCRAFT DESIGN. | GAGE | MINIMUM SECTION PROPERTIES PER FOOT WIDTH: I in$^4$ | S+in$^3$ | S−in$^3$ | Fy KSI |
|---|---|---|---|---|---|---|---|
| 1. ELECTRICAL BUILDING<br>2. SOLIDS HANDLING CANOPY<br>3. MAINTENANCE SHOP | 1 1/2" | 1.5B | 18 | 0.292 | 0.318 | 0.327 | 33 |

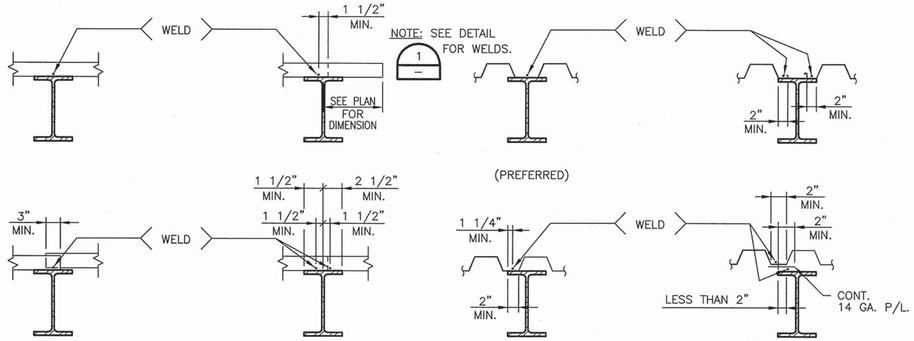


## STEEL DECK TO BEAM WELD
NTS 3

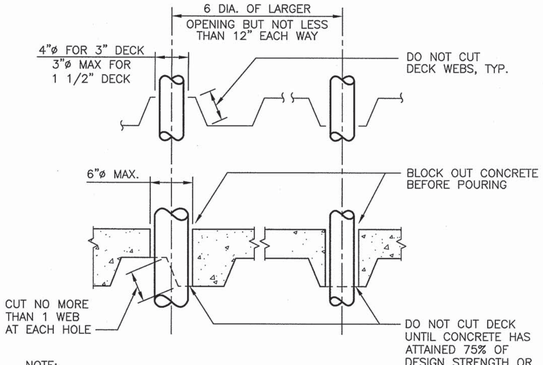


NOTE:
IF OPENINGS ARE CLOSER OR LARGER THAN SHOWN, REINFORCE DECK – SEE OTHER DETAILS.

## UNREINFORCED OPENING
NTS 4

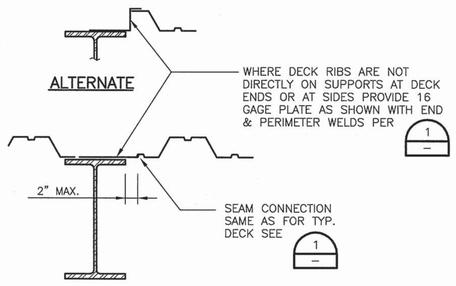


## DETAIL AT CLOSURE
NTS 8

## METAL DECK CROSS SECTION
NTS 2

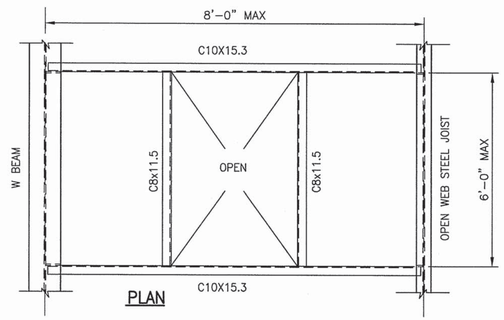


PLAN

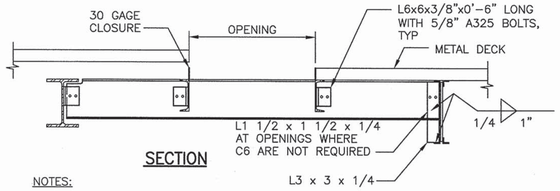


SECTION

NOTES:
1. THIS DETAIL APPLIES AT:
   A. CIRCULAR OPENING WITH DIAMETER 12" INCHES OR LARGER.
   B. RECTANGULAR OPENING WITH BOTH SIDES 12 INCHES OR LARGER.
2. SEE SECTION 05313 OF THE SPECIFICATIONS OR DETAILS 5 & 7 FOR REQUIRED REINFORCING OF METAL DECK AT OPENING SMALLER THAN THOSE NOTED ABOVE WHICH EVER RESULTS IN MORE STRINGENT REQUIREMENTS SHALL GOVERN.
3. REPLACE CHANNELS WITH C–STUDS FOR OPENINGS IN LIGHT GAGE METAL FRAMING. USE TEK SCREWS FOR LIGHT GAGE METAL FRAMING CONNECTIONS.

## METAL DECK OPENING
NTS 5

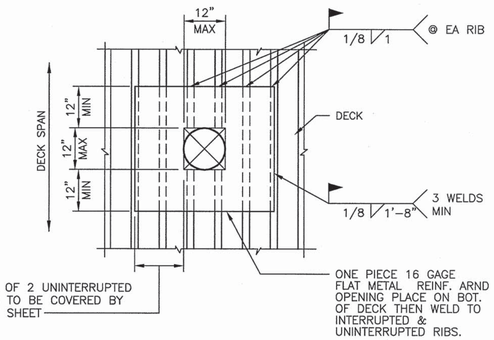


## ROOF DECK OPENING DETAIL (12" MAX OPENING)
NTS 6

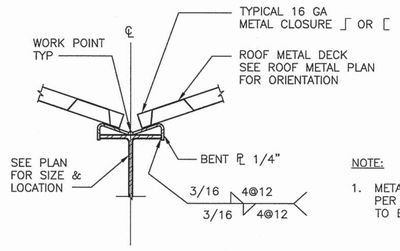


NOTE:
1. METAL DECK WELDING PER STANDARD DETAILS TO BOTH ANGLES.

## METAL DECK CONNECTION
NTS 9

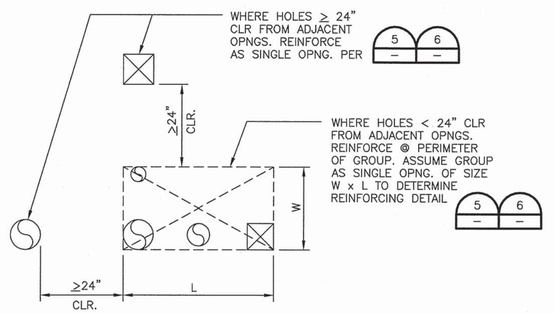


## GROUPS OF HOLES IN ROOF DECK
NTS 7

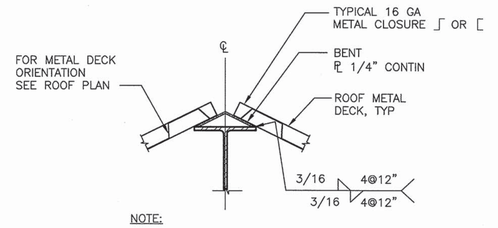


NOTE:
1. METAL DECK WELDING PER STANDARD DETAILS, TYPICAL.

## METAL DECK CONNECTION
NTS 10

FILE: 215786–00S17.dwg
DATE: Jun 30, 2015–8:35:39am, jwebb

HDR Engineering, Inc.

| ISSUE | DATE | DESCRIPTION |
|---|---|---|
| A | JUNE 2015 | ISSUED FOR BID |

| | |
|---|---|
| PROJECT MANAGER | C. OLSON |
| DESIGNED | O. TAVANGAR |
| DESIGNED | |
| CHECKED | O. TAVANGAR |
| DRAWN | D. ELDREDGE |
| DATE | JUNE 30, 2015 |
| PROJECT NUMBER | 215786 |

REGISTERED PROFESSIONAL ENGINEER OMID TAVANGAR NO. 54655 EXP. 12/31/15 CIVIL STATE OF CALIFORNIA 6/30/15

CITY OF PINOLE CALIFORNIA 1903

PINOLE/HERCULES
WATER POLLUTION
CONTROL PLANT UPGRADE
CLIENT PN

**STRUCTURAL**

**TYPICAL METAL DECK DETAILS**

0 1" 2"

| FILENAME | 215786–00S17 |
|---|---|
| SCALE | AS NOTED |

SHEET **00S17**

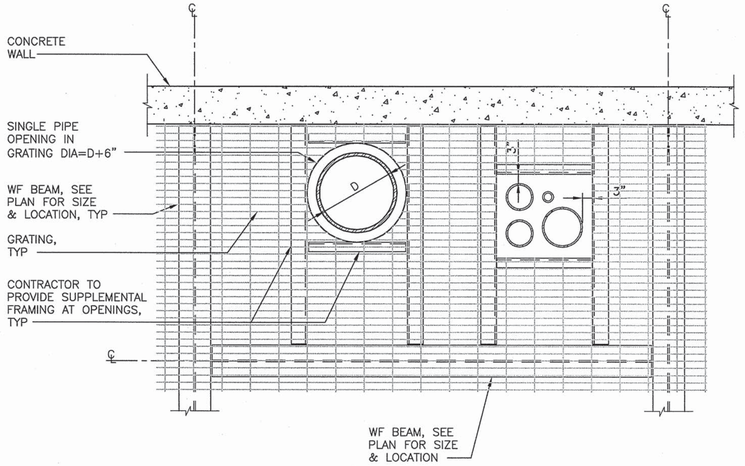


NOTES:
1. CONTRACTOR TO COORDINATE LOCATION OF PIPES & DUCT WORK WITH PROCESS AND MECHANICAL DRAWINGS.
2. CONTRACTOR TO PROVIDE SUPPLEMENTAL STEEL FRAMING AT OPENINGS, TYPICAL.

## GRATING PENETRATION

NTS — 1 / –

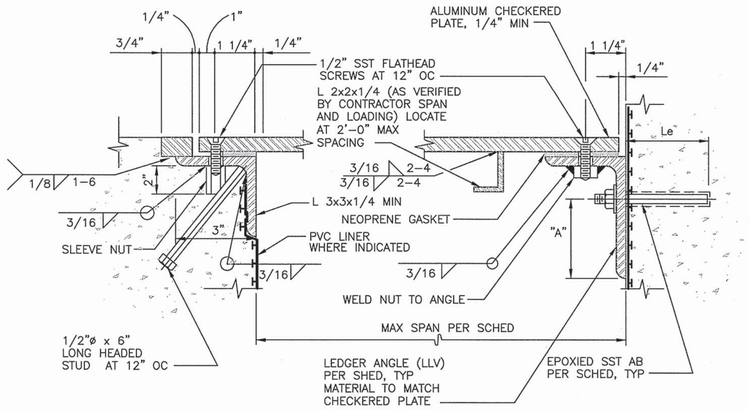


NOTES:
1. ALL METAL ITEMS ARE 6061-T6 ALUMINUM UNLESS NOTED OTHERWISE IN DESIGN DRAWINGS.
2. PVC LINER SHOWN FOR CONSTRUCTION WHERE APPLICABLE.
3. CHECKERED PLATE DESIGN EXCLUDES H20 LOADING.
4. ALL ALUMINUM IN CONTACT WITH CONCRETE SHALL BE COATED WITH ZINC CHROMATE PRIMER BEFORE EMBEDDING IN CONC.

## ALUMINUM CHECKERED PLATE COVERED OPENING

NTS — 2 / –

### ALUMINUM CHECKERED PLATE COVER SCHEDULE

| DESIGN LOADING PSF | MAX SPAN (FT) | LEDGER ANGLE SIZE | BOLT DIAMETER (IN) | BOLT SPACING (IN) | EMBED LENGTH, Le (IN) | "A" (INCH) |
|---|---|---|---|---|---|---|
| 100 | 2'-0" | L3x2x1/4 | 1/2 | 24 | 5 | 1.25 |
| | 3'-0" | L3x2x1/4 | 1/2 | 24 | 5 | 1.25 |
| | 4'-0" | L3x2x1/4 | 1/2 | 24 | 5 | 1.25 |
| | 5'-0" | L3x2x1/4 | 5/8 | 24 | 6 | 1.25 |
| 150 | 2'-0" | L3 1/2x3x1/4 | 1/2 | 24 | 5 | 1.75 |
| | 3'-0" | L3 1/2x3x1/4 | 1/2 | 24 | 5 | 1.75 |
| | 4'-0" | L3 1/2x3x1/4 | 5/8 | 24 | 6 | 1.75 |
| | 5'-0" | L3 1/2x3x1/4 | 3/4 | 24 | 6 | 1.75 |
| 200 | 2'-0" | L4x3x1/4 | 5/8 | 24 | 6 | 2.00 |
| | 3'-0" | L4x3x1/4 | 5/8 | 24 | 6 | 2.00 |
| | 4'-0" | L4x3x1/4 | 5/8 | 24 | 6 | 2.00 |
| | 5'-0" | L4x3x5/16 | 3/4 | 24 | 6 | 2.00 |
| 250 | 2'-0" | L5x3x5/16 | 5/8 | 24 | 6 | 2.50 |
| | 3'-0" | L5x3x5/16 | 5/8 | 24 | 6 | 2.50 |
| | 4'-0" | L5x3x5/16 | 3/4 | 24 | 6 | 2.50 |
| | 5'-0" | L5x3x5/16 | 3/4 | 24 | 6 | 2.50 |

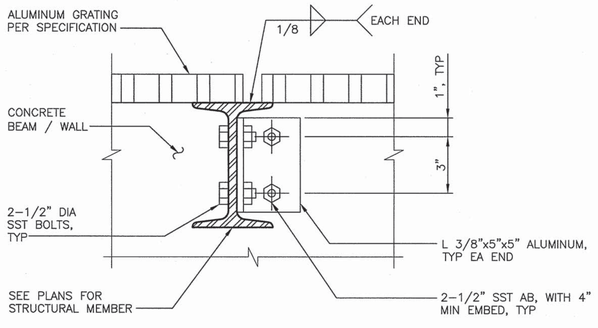


## GRATE SUPPORT

NTS — 3 / –

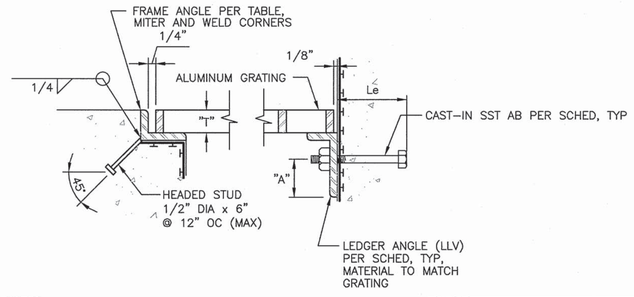


NOTES:
1. GRATING DEPTH TO BE DETERMINED BY MANUFACTURER AND APPROVED BY ENGINEER (UNO).
2. ALL ENDS AND OPENINGS SHALL BE BANDED.
3. ALL GRATING SHALL BE SECURED IN PLACE WITH REMOVABLE FASTENERS, SEE GRATING ANCHOR DETAIL.
4. WEIGHT OF GRATING SECTION SHALL NOT EXCEED 80 LBS.
5. BEARING BARS SHALL BE DEPTH T x 3/16" @ 1 3/16" OC, MINIMUM, AND CROSS BARS SHALL BE @ 4" OC.
6. ALL METAL ITEMS ARE 6061-T6 ALUMINUM UNLESS NOTED OTHERWISE.
7. PVC LINER SHOWN FOR CONSTRUCTION WHERE APPLICABLE.
8. ALL ALUMINUM IN CONTACT WITH CONCRETE SHALL BE COATED WITH ZINC CHROMATE PRIMER BEFORE EMBEDDING IN CONC.
9. GRATING DESIGN EXCLUDES H20 LOADING.

### FRAME ANGLE TABLE

| GRATING DEPTH "T" | FRAME ANGLE SIZE MIN |
|---|---|
| 1" | 1 3/4x1 1/4x1/4 |
| 1 1/4" | 2x1 1/2x1/4 |
| 1 1/2" | 1 3/4x1 3/4x1/4 |
| 1 3/4" | 2x2x1/4 |
| 2" | 2 1/2x2 1/2x1/2 |
| 2 1/4" | 2 1/2x2 1/2x1/2 |
| 2 1/2" | 3x2 1/2x1/2 |

### ALUMINUM GRATING SUPPORT SCHEDULE

| DESIGN LOADING PSF | MAX SPAN | LEDGER ANGLE | BOLT DIAMETER | BOLT SPACING | EMBEDED LENGTH Le | "A" (INCH) |
|---|---|---|---|---|---|---|
| 100 | 2'-0" | L3x2x1/4 | 1/2 " | 24 | 6 | 1.25 |
| | 3'-0" | L3x2x1/4 | 1/2 " | 24 | 6 | 1.25 |
| | 4'-0" | L3x2x1/4 | 1/2 " | 24 | 6 | 1.25 |
| | 5'-0" | L3x2x5/16 | 1/2 " | 24 | 6 | 1.25 |
| 150 | 2'-0" | L3 1/2x3x1/4 | 1/2 " | 24 | 6 | 1.75 |
| | 3'-0" | L3 1/2x3x1/4 | 1/2 " | 24 | 6 | 1.75 |
| | 4'-0" | L3 1/2x3x5/16 | 1/2 " | 24 | 6 | 1.75 |
| | 5'-0" | L3 1/2x3x5/16 | 5/8 " | 24 | 6 | 1.75 |
| 200 | 2'-0" | L4x3x1/4 | 1/2 " | 24 | 6 | 2.00 |
| | 3'-0" | L4x3x1/4 | 1/2 " | 24 | 6 | 2.00 |
| | 4'-0" | L4x3x5/16 | 5/8 " | 24 | 6 | 2.00 |
| | 5'-0" | L4x3x3/8 | 3/4 " | 24 | 6 | 2.00 |
| 250 | 2'-0" | L5x3x5/16 | 1/2 " | 24 | 6 | 2.50 |
| | 3'-0" | L5x3x5/16 | 5/8 " | 24 | 6 | 2.50 |
| | 4'-0" | L5x3x5/16 | 5/8 " | 24 | 6 | 2.50 |
| | 5'-0" | L5x3x5/16 | 3/4 " | 24 | 6 | 2.50 |

## ALUMINUM GRATING SUPPORT DETAIL

NTS — 4 / –

FILE: 215786-00S18.dwg
DATE: Jun 30, 2015 - 8:35:42am, jwebb

HDR Engineering, Inc.

| ISSUE | DATE | DESCRIPTION |
|---|---|---|
| A | JUNE 2015 | ISSUED FOR BID |

| | |
|---|---|
| PROJECT MANAGER | C. OLSON |
| DESIGNED | M. RAMANATHAN |
| DESIGNED | |
| CHECKED | C. OLSON |
| DRAWN | D. ELDREDGE |
| DATE | JUNE 30, 2015 |
| PROJECT NUMBER | 215786 |

REGISTERED PROFESSIONAL ENGINEER — DAVID T. AVANGAR — NO. 54655 EXP. 12/31/15 — CIVIL — STATE OF CALIFORNIA — 6/30/15

CITY OF PINOLE CALIFORNIA — 1903

PINOLE/HERCULES
WATER POLLUTION
CONTROL PLANT UPGRADE
CLIENT PN

**STRUCTURAL**

**TYPICAL GRATING DETAILS**

0 1" 2"

| | |
|---|---|
| FILENAME | 215786-00S18 |
| SCALE | AS NOTED |

SHEET **00S18**

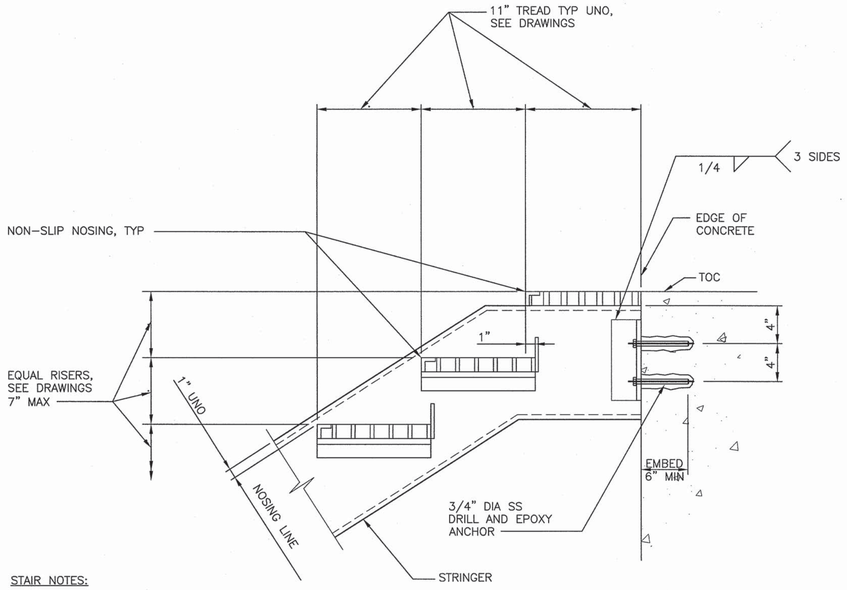


STAIR NOTES:

1. ALL STAIRS AND APPURTENANT ITEMS SHOWN ON DRAWINGS SHALL BE ALUMINUM, UNLESS SHOWN AS CONCRETE STAIRS ON DRAWINGS. ALL FASTENERS SHALL BE STAINLESS STEEL TYPE 316.
2. STAIR TREADS, STRINGERS, RAILING AND CONNECTION DESIGN BY FABRICATOR. SEE SPECIFICATION SECTION 05505.

## ALUMINUM STAIR AT TOP (1)
NTS

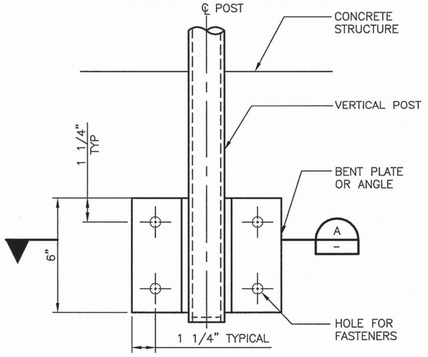


FRONT VIEW

NOTES:
1. VERTICAL POST SHALL BE 1 1/2" NOMINAL DIAMETER SCHEDULE 40 PIPE.
2. FASTENERS SHALL BE 1/2" DIAMETER STAINLESS STEEL ADHESIVE ANCHORS WITH 4" MININUM EMBEDMENT. PROVIDE STAINLESS STEEL NUTS AND WASHER.

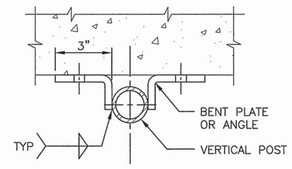


SECTION – A

## GUARDRAIL POST ANCHORAGE DETAIL AT CONCRETE (2)
NTS

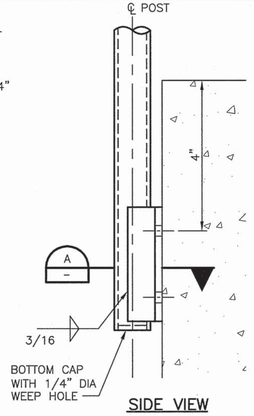


SIDE VIEW

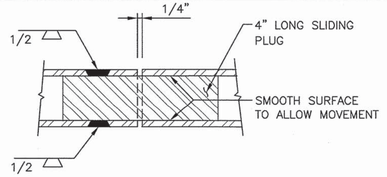


NOTES:
1. MECHANICAL ATTACHMENT MAY BE SUBSTITUTED FOR WELDING
2. GRIND WELDS SMOOTH

## RAIL EXPANSION JOINT (3)
NTS

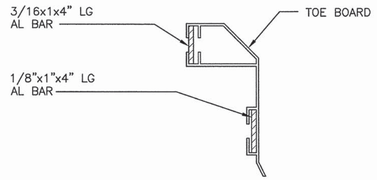


TOEBOARD VERTICAL SECTION

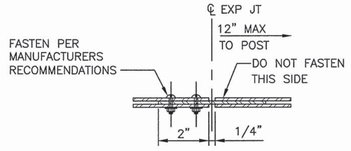


HORIZONTAL SECTION

## TYPICAL TOEBOARD EXPANSION JOINT (4)
NTS

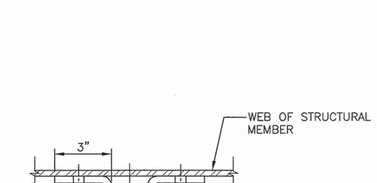


NOTE:
TOE BOARD NOT SHOWN.

PLAN VIEW

## SECTION (B)
NTS

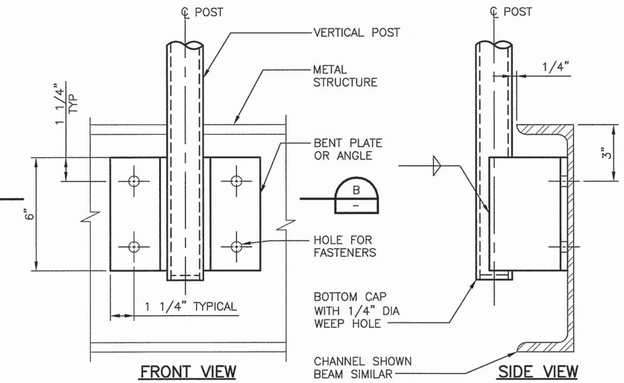


FRONT VIEW SIDE VIEW

## RAILING POST ANCHORAGE DETAIL AT METAL (5)
NTS

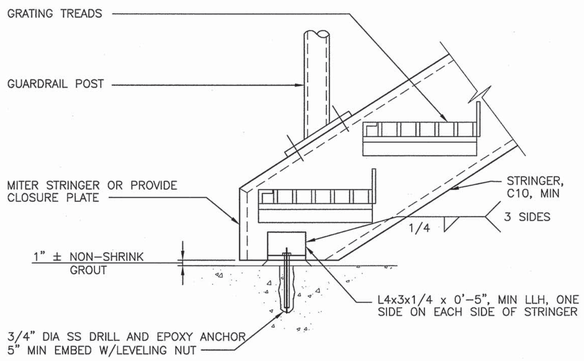


## ALUMINUM STAIR AT BOTTOM (6)
NTS

NOTE: TOE BOARD TO MATCH EXISTING

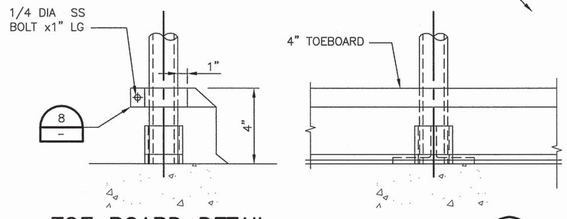


## TOE BOARD DETAIL (7)
NTS

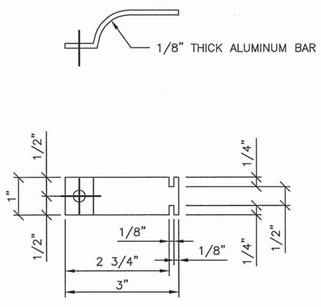


## TOE BOARD CONNECTOR (8)
NTS

RAILING NOTES:

1. ALL RAILING SHALL BE ALUMINUM, UNLESS OTHERWISE SPECIFIED.
2. ALL FASTENERS SHALL BE STAINLESS STEEL.
3. RAILING SHALL BE INSTALLED SO AS NOT TO INTERFERE WITH ANY PIPING, EQUIPMENT OR EASE-OUT AIR PIPING ASSEMBLY. CONTRACTOR TO COORDINATE.
4. RAILING POST LOCATIONS SHALL BE FIELD MEASURED AND RAILING FABRICATED TO FIT. NO FIELD CUTTING OR WELDING WILL BE PERMITTED. RAILING WHICH DOES NOT FIT MOUNTING PREVIOUSLY SET IN CONCRETE WILL BE REJECTED.
5. WHERE NO CURB, PROVIDE TOE BOARD UNLESS SPECIFICALLY CALLED OUT AS NO TOE BOARD REQUIRED.
6. SPACING OF EXPANSION JOINT IN RAIL AND TOE BOARD SHALL NOT EXCEED 20 FEET.
7. RAILING POST TO BE EVENLY SPACED.

FILE: 215786-00S19.dwg
DATE: Jun 30, 2015-8:35:46am, jwebb

HDR Engineering, Inc.

| ISSUE | DATE | DESCRIPTION |
|---|---|---|
| A | JUNE 2015 | ISSUED FOR BID |

| | |
|---|---|
| PROJECT MANAGER | C. OLSON |
| DESIGNED | M. RAMANATHAN |
| DESIGNED | |
| CHECKED | C. OLSON |
| DRAWN | D. ELDREDGE |
| DATE | JUNE 30, 2015 |
| PROJECT NUMBER | 215786 |

REGISTERED PROFESSIONAL ENGINEER — CAMILO TAVANAPA — NO. 54655 EXP. 12/31/15 — CIVIL — STATE OF CALIFORNIA — 6/30/15

CITY OF PINOLE CALIFORNIA 1903

PINOLE/HERCULES
WATER POLLUTION
CONTROL PLANT UPGRADE
CLIENT PN

**STRUCTURAL**

**TYPICAL RAILING DETAILS - I**

0 1" 2"

| | |
|---|---|
| FILENAME | 215786-00S19 |
| SCALE | AS NOTED |

SHEET **00S19**

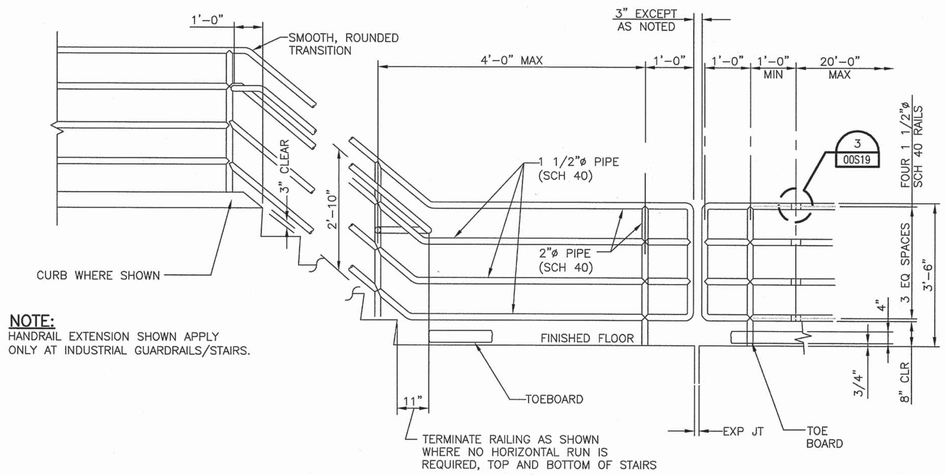


**NOTE:**
HANDRAIL EXTENSION SHOWN APPLY ONLY AT INDUSTRIAL GUARDRAILS/STAIRS.

## INDUSTRIAL GUARDRAIL
NTS — 1

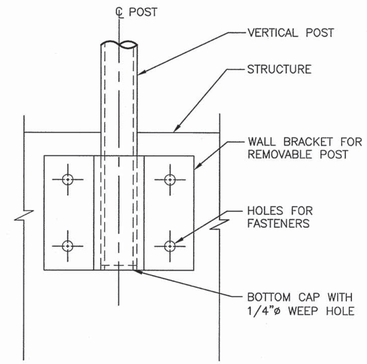


## REMOVABLE GUARDRAIL POST WALL MOUNTING
NTS — 2

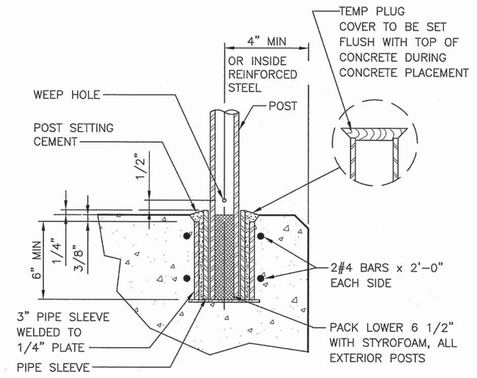


## REMOVABLE GUARDRAIL POST SETTING
NTS — 3

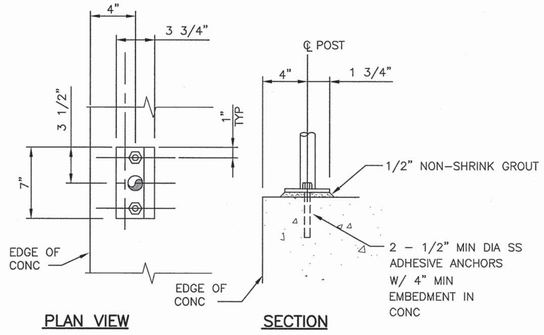


## POST MOUNTING – RECTANGULAR BASE
NTS — 4

FILE: 215786-00S20.dwg
DATE: Jun 30, 2015-8:35:50am, jwebb

HDR Engineering, Inc.

| ISSUE | DATE | DESCRIPTION |
|---|---|---|
| A | JUNE 2015 | ISSUED FOR BID |

| | |
|---|---|
| PROJECT MANAGER | C. OLSON |
| DESIGNED | M. RAMANATHAN |
| DESIGNED | |
| CHECKED | C. OLSON |
| DRAWN | D. ELDREDGE |
| DATE | JUNE 30, 2015 |
| PROJECT NUMBER | 215786 |

REGISTERED PROFESSIONAL ENGINEER — OMID TAYANORR — NO. 54659 EXP. 12/31/15 — CIVIL — STATE OF CALIFORNIA

CITY OF PINOLE CALIFORNIA — 1903

PINOLE/HERCULES
WATER POLLUTION
CONTROL PLANT UPGRADE
CLIENT PN

**STRUCTURAL**

**TYPICAL RAILING DETAILS - II**

0 1" 2"

| | |
|---|---|
| FILENAME | 215786-00S20 |
| SCALE | AS NOTED |

SHEET **00S20**

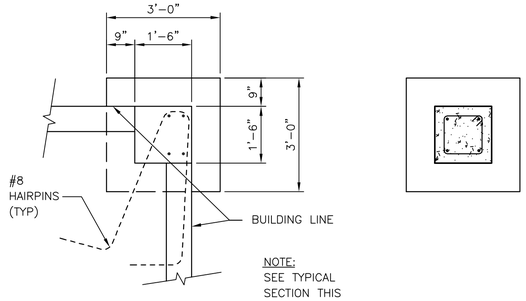


NOTE:
SEE TYPICAL SECTION THIS PAGE.

PLAN



SECTIONAL PLAN

DETAIL 1
1/2" = 1'-0"

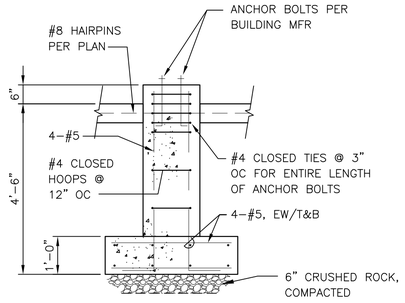


TYPICAL SECTION
THRU COLUMN FOOTING
NTS

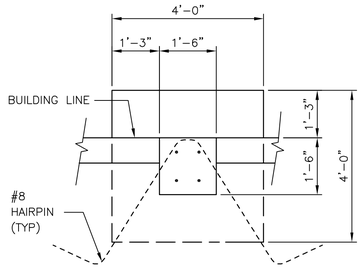


NOTE:
SEE TYPICAL SECTION THIS PAGE.

PLAN

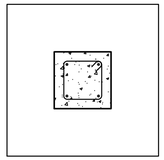

SECTIONAL PLAN

DETAIL 2
1/2" = 1'-0"

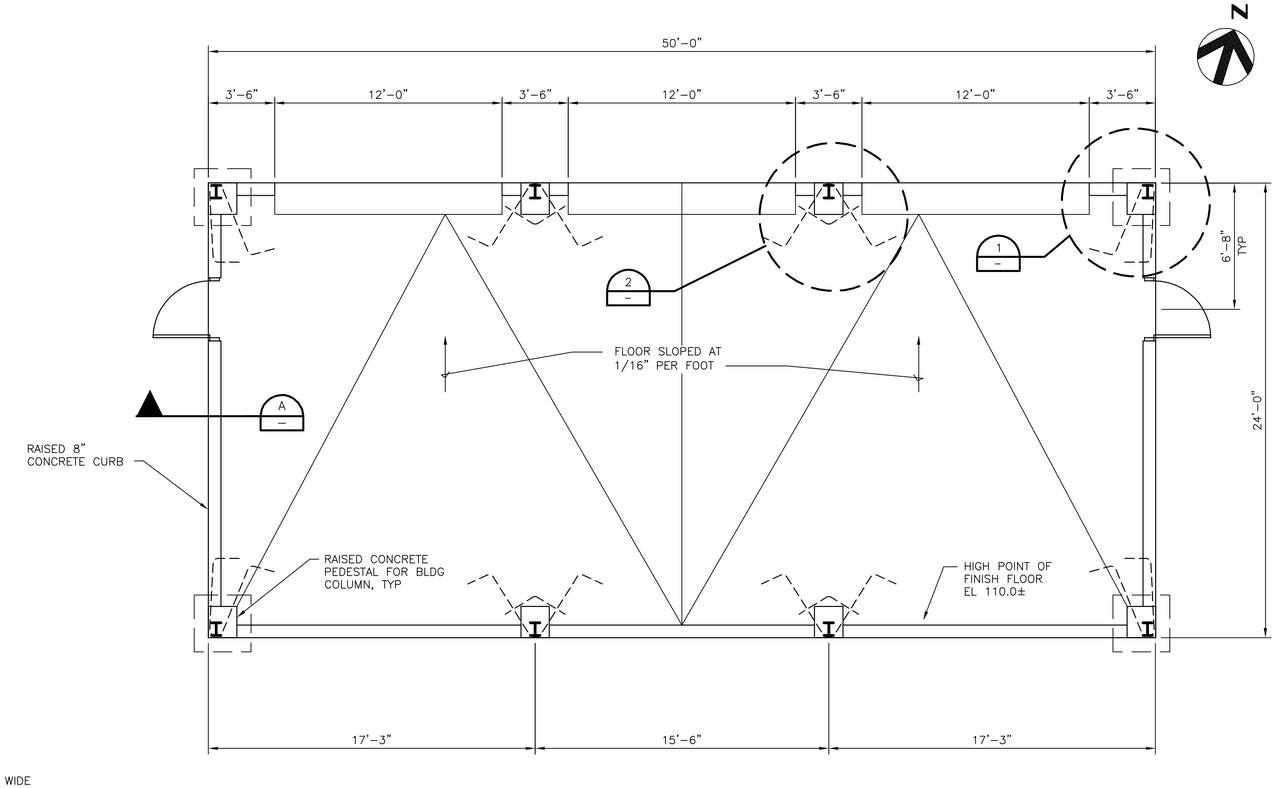


FLOOR PLAN
1/4" = 1'-0"

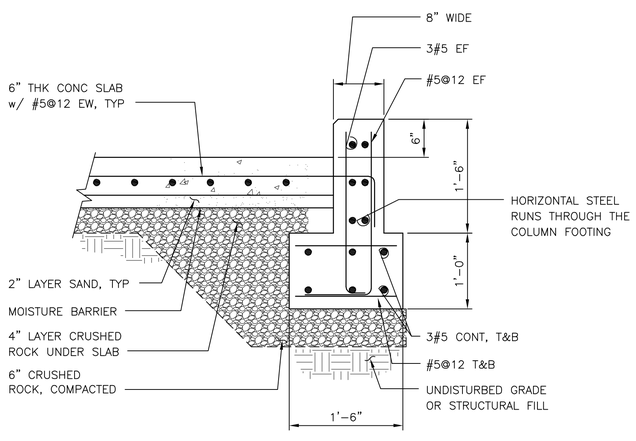


SECTION A
1" = 1'-0"

FILE: 215786-01S101.dwg
DATE: Oct 07, 2015-6:37:33am, rsnider

HDR Engineering, Inc.

| ISSUE | DATE | DESCRIPTION |
|---|---|---|
| A | JUNE 2015 | ISSUED FOR BID |

| | |
|---|---|
| PROJECT MANAGER | C. OLSON |
| DESIGNED | |
| DESIGNED | |
| CHECKED | O. TAVANGAR |
| DRAWN | D. ELDREDGE |
| DATE | JUNE 30, 2015 |
| PROJECT NUMBER | 215786 |

CITY OF PINOLE CALIFORNIA 1903

PINOLE/HERCULES
WATER POLLUTION
CONTROL PLANT UPGRADE
CLIENT PN

**STRUCTURAL**

**PUBLIC WORKS BUILDING**
**FOUNDATION PLAN AND DETAILS**

0 1" 2"

| | |
|---|---|
| FILENAME | 215786-01S101 |
| SCALE | NTS |

SHEET
**01S101**

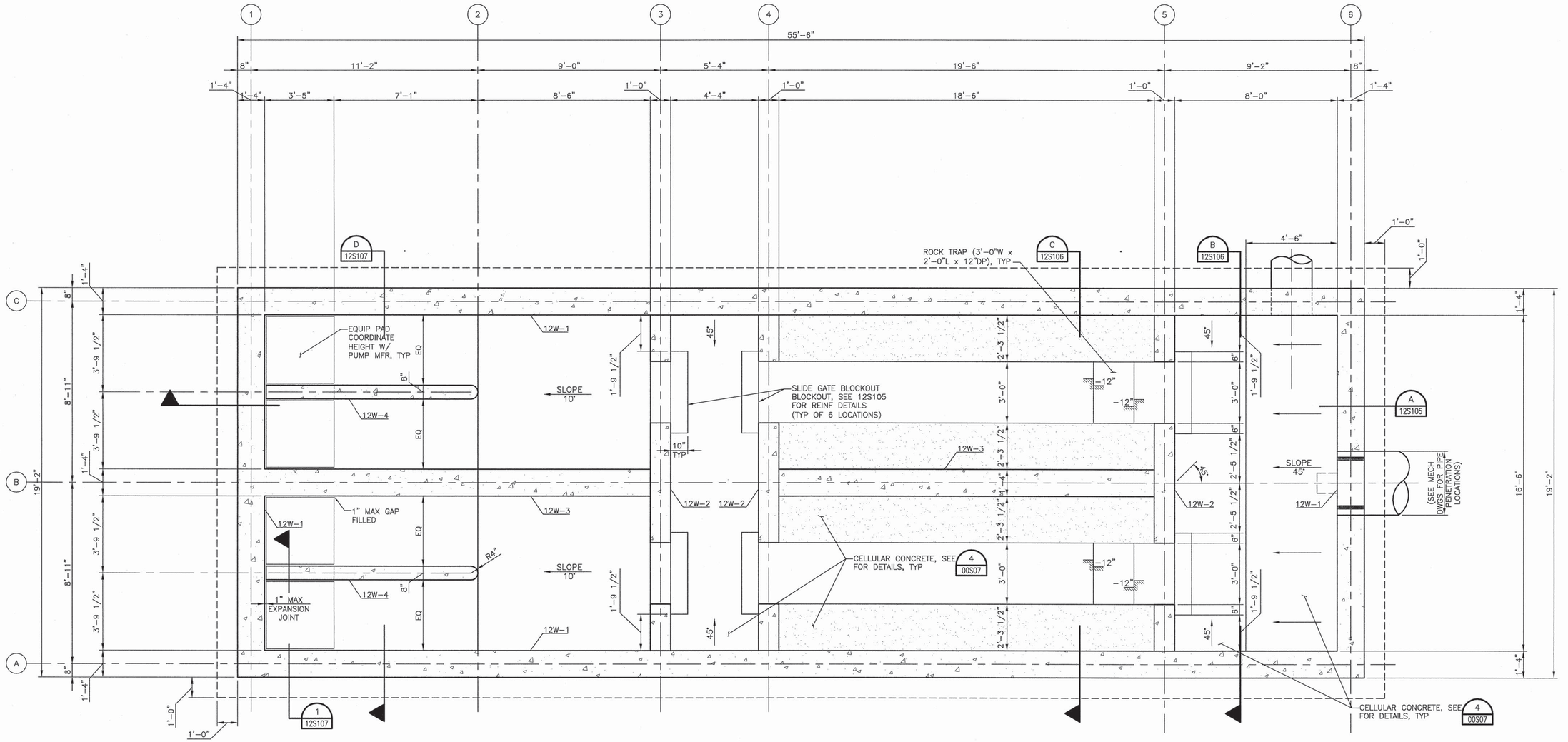


**NOTE:**
PVC LINER IS REQUIRED FOR THIS STRUCTURE. REFER TO NOTE 10

## FOUNDATION PLAN
3/8" = 1'-0"

**NOTES:**

1. FOR GENERAL NOTES, SEE SHEET 00S01 AND 00S02.
2. FOR SPECIAL INSPECTION REQUIREMENTS, SEE 00S03 AND 00S04.
3. FOR TYPICAL CONCRETE DETAILS, SEE SHEETS 00S05 THRU 00S08.
4. FOR TYPICAL REINFORCING DETAILS, SEE 00S09.
5. FOR TYPICAL CONCRETE BEAM, SLAB, AND WALL DETAILS AND SCHEDULES, SEE SHEETS 00S11 AND 00S12.
6. "12W-X" DENOTES CONCRETE WALL. SEE SHEET 00S11 FOR WALL REINFORCING SCHEDULE.
7. ALL COLUMNS AND WALLS ARE CENTERED ON GRID LINES, UNLESS NOTED OTHERWISE.
8. ALL DIMENSIONS FOR OPENINGS ARE ROUGH OPENING SIZES, UNLESS NOTED OTHERWISE.
9. CONTRACTOR TO COORDINATE/VERIFY THE LOCATION AND SIZES OF ALL OPENINGS WITH PROCESS DRAWINGS.
9. CONTRACTOR TO COORDINATE/VERIFY THE LOCATION AND SIZES OF ALL OPENINGS WITH PROCESS DRAWINGS.
10. INSTALL PVC LINER TO VERTICAL, SLOPED AND CEILING CONCRETE SURFACES ABOVE ELEVATION 90.66' AND BELOW ELEVATION 109.50'. PVC LINER TO RUN 6" MINIMUM BEHIND CELLULAR CONCRETE FILLETS FROM VERTICAL SURFACES ABOVE CELLULAR CONCRETE. TOP OF CELLULAR CONCRETE SURFACES DO NOT REQUIRE PVC LINER. VERTICAL SURFACES OF CELLULAR CONCRETE DO REQUIRE PVC LINER. CHANNEL FLOORS AT AND BETWEEN ELEVATION 90.66' TO 92.17' DO NOT REQUIRE PVC LINER. SEE SPECIFICATION SECTION 07101 AND DETAILS ON 00SXX.
11. DENOTES CHANGE IN TOP OF CONCRETE ELEVATION.

TRUE NORTH

PROJECT NORTH

FILE: 215786-12S101.dwg
DATE: Jun 30, 2015 - 10:43:57am, ranider

HDR Engineering, Inc.

| ISSUE | DATE | DESCRIPTION |
|---|---|---|
| A | JUNE 2015 | ISSUED FOR BID |

| | |
|---|---|
| PROJECT MANAGER | C. OLSON |
| DESIGNED | M. MOSTAFA |
| DESIGNED | |
| CHECKED | O. TAVANGAR |
| DRAWN | D. ELDREDGE |
| DATE | JUNE 30, 2015 |
| PROJECT NUMBER | 215786 |

REGISTERED PROFESSIONAL ENGINEER MOHAMMADREZA MOSTAFA NO. 78649 EXP. 09/30/15 CIVIL STATE OF CALIFORNIA 06/30/15

CITY OF PINOLE CALIFORNIA 1903

PINOLE/HERCULES WATER POLLUTION CONTROL PLANT UPGRADE
CLIENT PN

**SRUCTURAL**

**HEADWORKS FOUNDATION PLAN**

0 1" 2"

| | |
|---|---|
| FILENAME | 215786-12S101 |
| SCALE | AS NOTED |

SHEET **12S101**

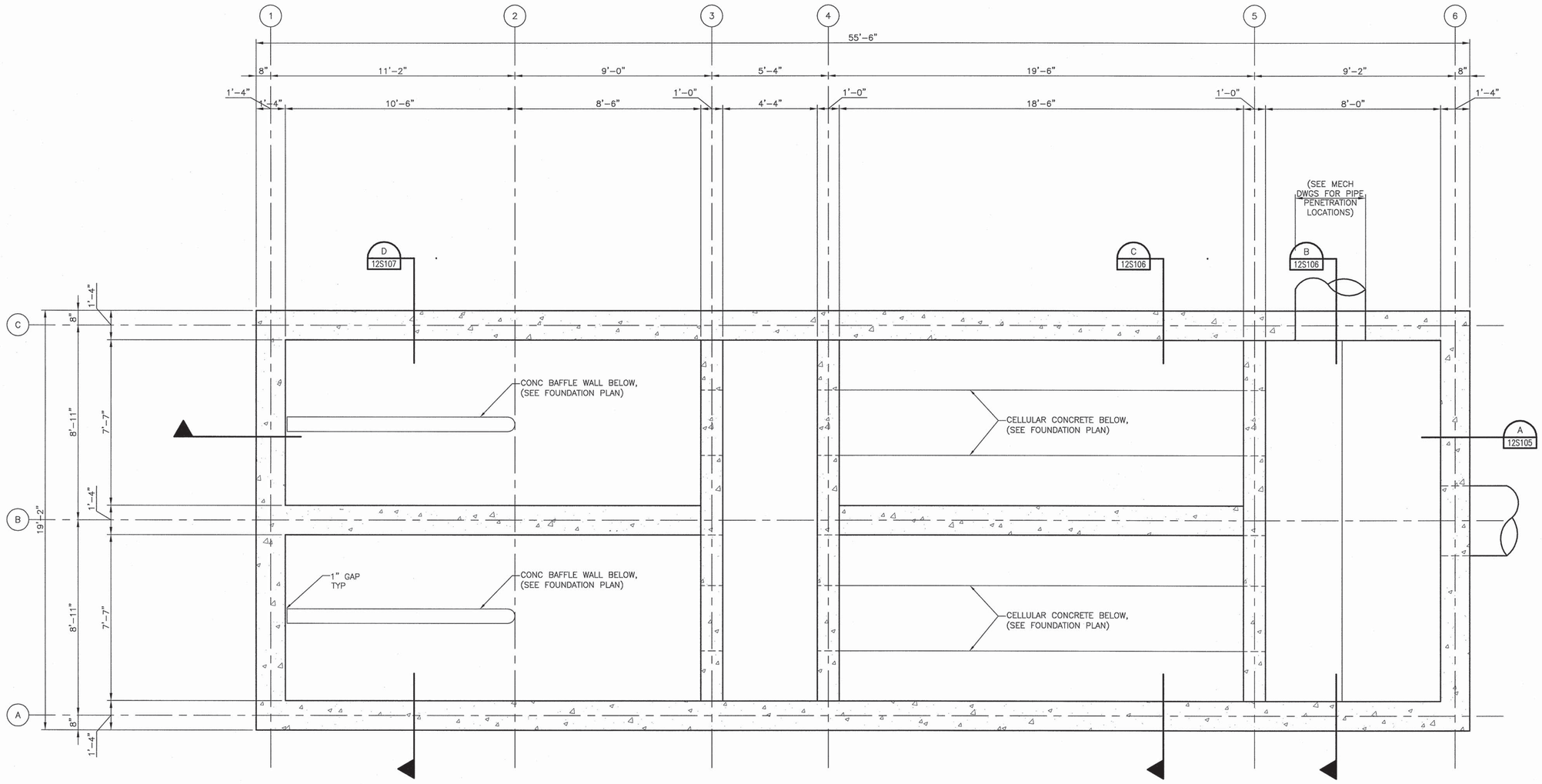


## INTERMEDIATE PLAN

3/8" = 1'-0"

NOTES:

1. FOR GENERAL NOTES, SEE SHEET 00S01 AND 00S02.
2. FOR SPECIAL INSPECTION REQUIREMENTS, SEE 00S03 AND 00S04.
3. FOR TYPICAL CONCRETE DETAILS, SEE SHEETS 00S05 THRU 00S08.
4. FOR TYPICAL REINFORCING DETAILS, SEE 00S09.
5. FOR TYPICAL CONCRETE BEAM AND WALL DETAILS AND SCHEDULES, SEE SHEETS 00S11 AND 00S12.
6. ALL COLUMNS AND WALLS ARE CENTERED ON GRID LINES, UNLESS NOTED OTHERWISE.
7. ALL DIMENSIONS FOR OPENINGS ARE ROUGH OPENING SIZES, UNLESS NOTED OTHERWISE.

TRUE NORTH

PROJECT NORTH

FILE: 215786-12S102.dwg
DATE: Jun 30, 2015-10:45:12am, rsnider

HDR Engineering, Inc.

| ISSUE | DATE | DESCRIPTION |
|---|---|---|
| A | JUNE 2015 | ISSUED FOR BID |

| | |
|---|---|
| PROJECT MANAGER | C. OLSON |
| | |
| DESIGNED | M. MOSTAFA |
| DESIGNED | |
| CHECKED | O. TAVANGAR |
| DRAWN | D. ELDREDGE |
| DATE | JUNE 30, 2015 |
| | |
| PROJECT NUMBER | 215786 |

REGISTERED PROFESSIONAL ENGINEER MOHAMMADREZA MOSTAFA NO. 78649 EXP. 09/30/15 CIVIL STATE OF CALIFORNIA 06/30/15

CITY OF PINOLE CALIFORNIA 1903

PINOLE/HERCULES WATER POLLUTION CONTROL PLANT UPGRADE CLIENT PN

**STRUCTURAL**

**HEADWORKS INTERMEDIATE PLAN**

0 1" 2"

| | |
|---|---|
| FILENAME | 215786-12S102 |
| SCALE | AS NOTED |

SHEET **12S102**

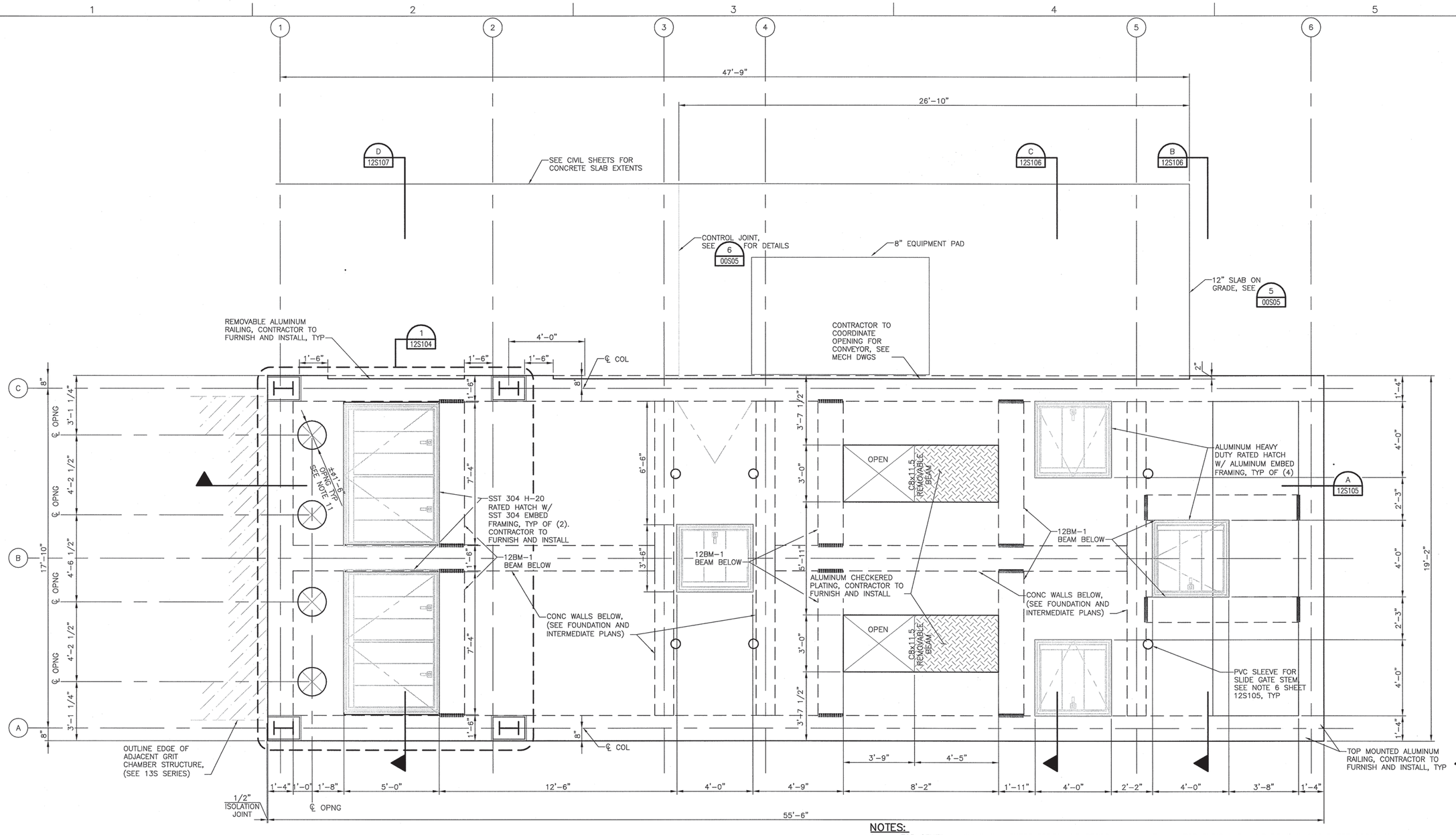


## TOP PLAN

3/8" = 1'-0"

NOTES:

1. FOR GENERAL NOTES, SEE SHEET 00S01 AND 00S02.
2. FOR SPECIAL INSPECTION REQUIREMENTS, SEE 00S03 AND 00S04.
3. FOR TYPICAL CONCRETE DETAILS, SEE SHEETS 00S05 THRU 00S08.
4. FOR TYPICAL REINFORCING DETAILS, SEE 00S09.
5. FOR TYPICAL CONCRETE SLAB SEE SHEETS 12S105 AND 12S106.
6. FOR TYPICAL GRATING/CHECKERED PLATE DETAILS, SEE SHEET 00S18.
7. FOR TYPICAL RAILING DETAILS, SEE SHEET 00S19 AND 00S20.
8. ALL COLUMNS AND WALLS ARE CENTERED ON GRID LINES, UNLESS NOTED OTHERWISE.
9. ALL DIMENSIONS FOR OPENINGS ARE ROUGH OPENING SIZES, UNLESS NOTED OTHERWISE.
10. "12B-X" DENOTES CONCRETE BEAM. SEE SHEET 00S12 FOR DETAILS AND SCHEDULE.
11. CONTRACTOR TO COORDINATE/VERIFY THE LOCATION AND SIZES OF ALL OPENINGS WITH PROCESS DRAWINGS.

TRUE NORTH

PROJECT NORTH

FILE: 215786-12S103.dwg
DATE: Jun 30, 2015-11:06:53am, ranider

HDR Engineering, Inc.

| ISSUE | DATE | DESCRIPTION |
|---|---|---|
| A | JUNE 2015 | ISSUED FOR BID |

| | |
|---|---|
| PROJECT MANAGER | C. OLSON |
| DESIGNED | M. MOSTAFA |
| DESIGNED | |
| CHECKED | O. TAVANGAR |
| DRAWN | D. ELDREDGE |
| DATE | JUNE 30, 2015 |
| PROJECT NUMBER | 215786 |

REGISTERED PROFESSIONAL ENGINEER
MOHAMMADREZA MOSTAFA
NO. 78649
EXP. 09/30/15
CIVIL
STATE OF CALIFORNIA
06/30/15

CITY OF PINOLE CALIFORNIA 1903

PINOLE/HERCULES WATER POLLUTION CONTROL PLANT UPGRADE
CLIENT PN

**STRUCTURAL**

**HEADWORKS TOP PLAN**

0 1" 2"

| | |
|---|---|
| FILENAME | 215786-12S103 |
| SCALE | AS NOTED |

SHEET **12S103**

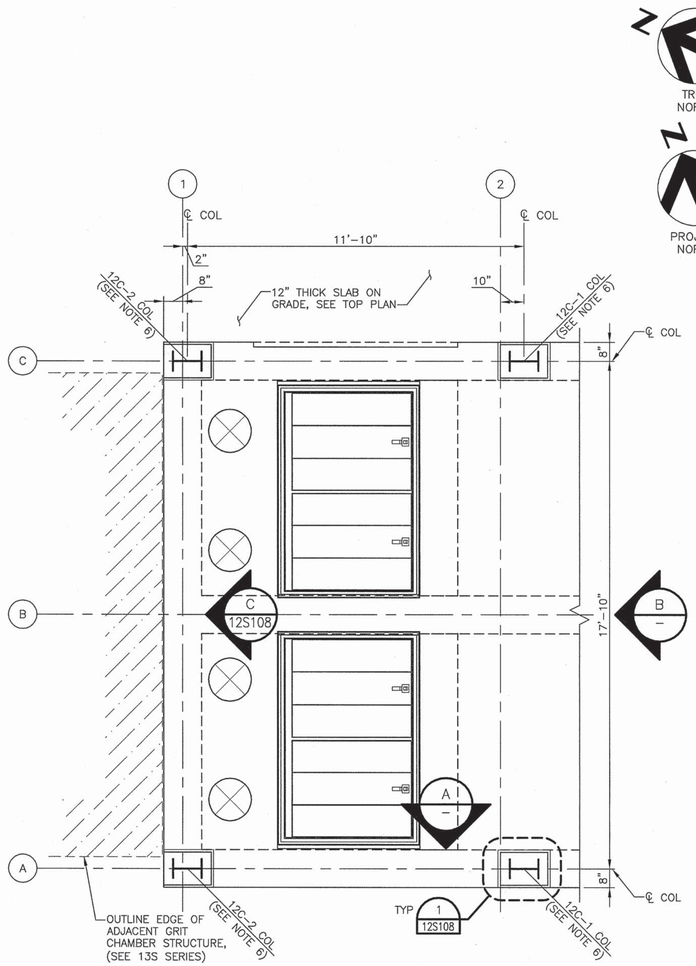


## MONORAIL COL PLAN

3/8" = 1'–0"

1 12S103

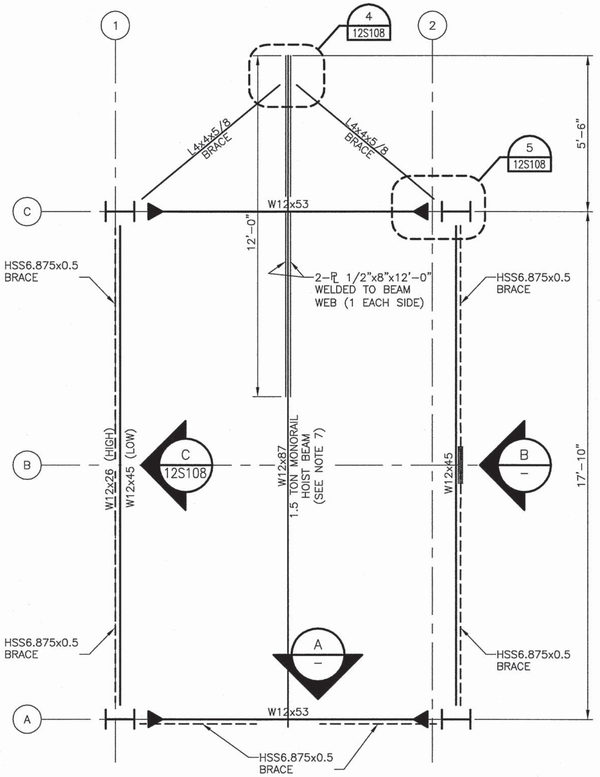


## MONORAIL FRAMING PLAN

3/8" = 1'–0"

2 –

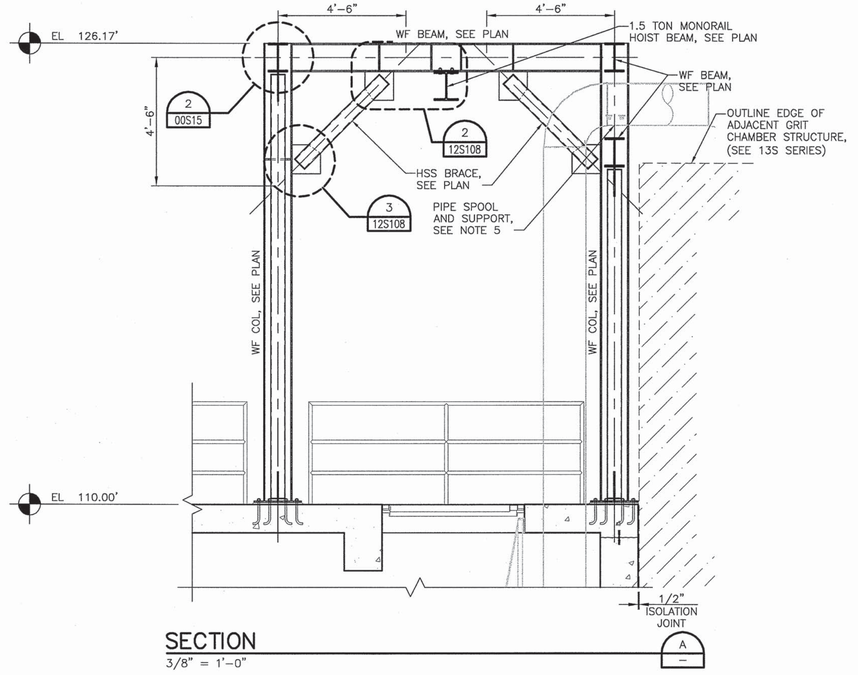


## SECTION

3/8" = 1'–0"

A –

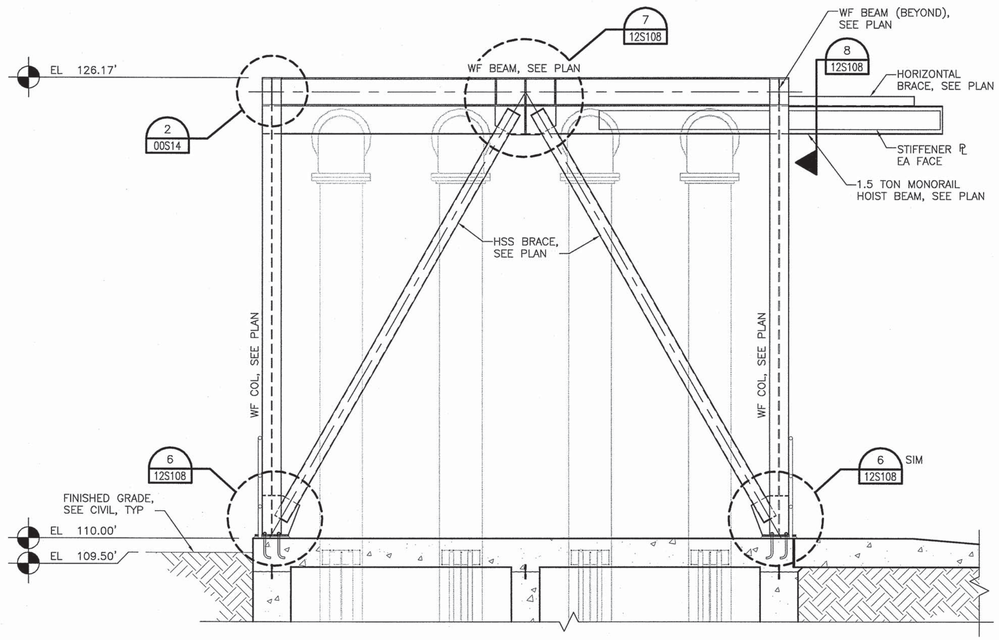


## SECTION

3/8" = 1'–0"

B –

NOTES:

1. FOR MONORAIL CRANE TROLLEY AND HOIST SEE MANUFACTURER'S DRAWINGS AND SPECIFICATIONS.
2. THE DESIGN OF THE MONORAIL FRAMING IS BASED UPON THE CAPACITY OF A 3,000 LBS CRANE.
3. FOR CONCRETE WALL SCHEDULE SEE 00S11.
4. FOR CONCRETE SLAB REINFORCEMENT SEE 12S105.
5. DENOTES RIGID CONNECTION, SEE 2/00S10 FOR DETAILS.
6. 12C–X COL DENOTES STEEL COLUMN. SEE COLUMN SCHEDULE FOR COLUMN TYPE AND SIZE ON 5/00S14.
7. 1.5 TON UNDERHUNG MONORAIL CRANE GIRDER.
8. COORDINATE FINAL BEAM ELEVATION FOR PIPE SUPPORT WITH PROCESS DRAWINGS.

FILE: 215786–12S104.dwg
DATE: Jun 30, 2015–10:51:42am, ranider

HDR Engineering, Inc.

| ISSUE | DATE | DESCRIPTION |
|---|---|---|
| A | JUNE 2015 | ISSUED FOR BID |

| | |
|---|---|
| PROJECT MANAGER | C. OLSON |
| DESIGNED | M. MOSTAFA |
| DESIGNED | |
| CHECKED | O. TAVANGAR |
| DRAWN | D. ELDREDGE |
| DATE | JUNE 30, 2015 |
| PROJECT NUMBER | 215786 |

REGISTERED PROFESSIONAL ENGINEER MOHAMMADREZA MOSTAFA NO. 78649 EXP. 09/30/15 CIVIL STATE OF CALIFORNIA 06/30/15

CITY OF PINOLE CALIFORNIA 1903

PINOLE/HERCULES WATER POLLUTION CONTROL PLANT UPGRADE CLIENT PN

**STRUCTURAL**

**HEADWORKS - MONORAIL FRAMING PLAN AND SECTIONS**

0 1" 2"

| | |
|---|---|
| FILENAME | 215786–12S104 |
| SCALE | AS NOTED |

SHEET **12S104**

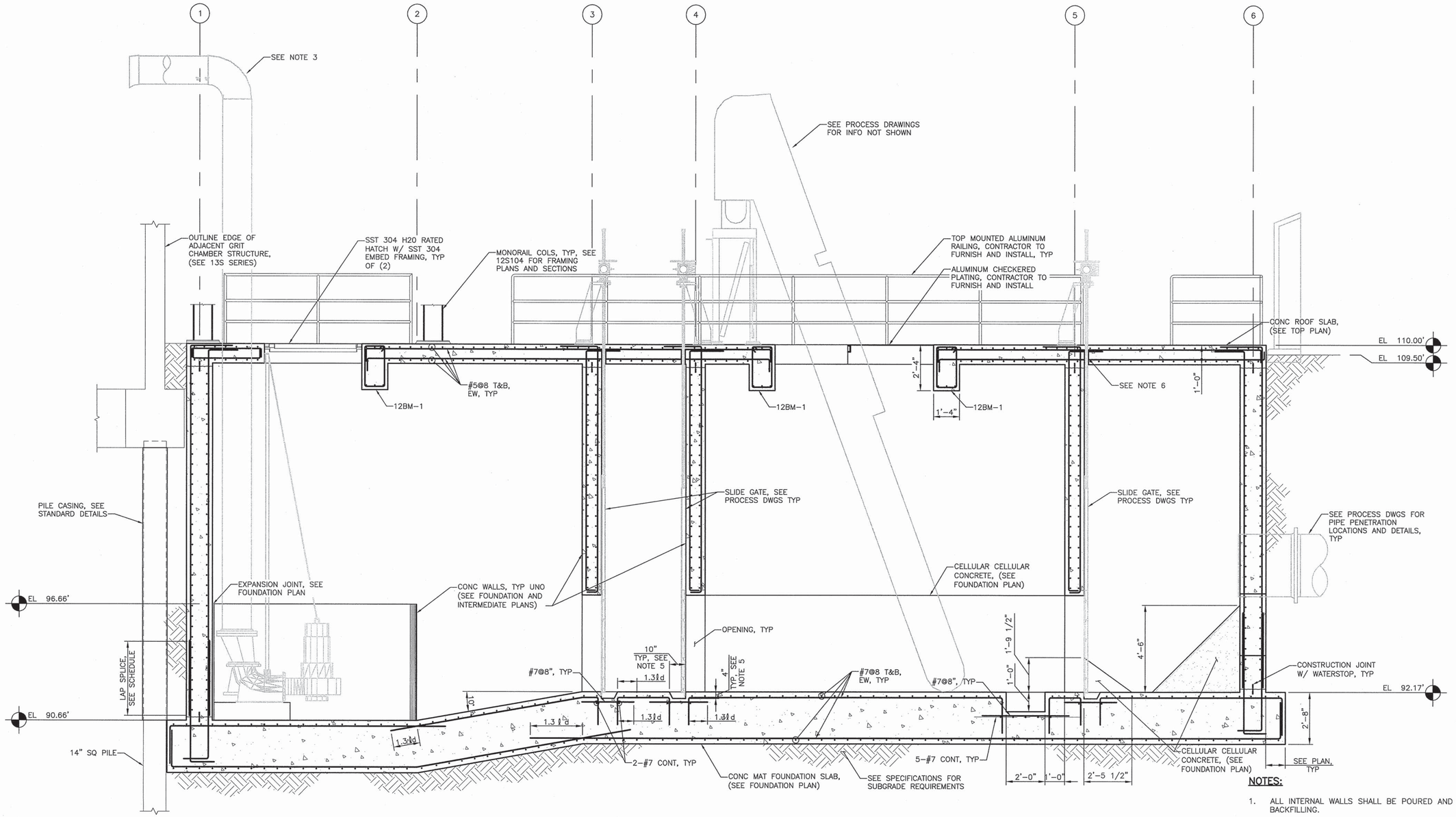


## SECTION

SCALE: 3/8" = 1'-0"

A 12S101

**NOTES:**

1. ALL INTERNAL WALLS SHALL BE POURED AND SET PRIOR TO BACKFILLING.
2. FOR WALL MARKS AND WALL SCHEDULE SEE 12S101 AND 00S11.
3. FOR PIPE CONNECTIONS, EQUIPMENT AND DETAILS SEE MECHANICAL DRAWINGS.
4. FOR CELLULAR CONCRETE SEE SPECIFICATIONS.
5. CONTRACTOR TO VERIFY THE SIZE OF THE BLOCKOUT WITH THE GATE MANUFACTURER PRIOR TO CONCRETE POUR.
6. PROVIDE PVC SLEEVES FOR SLIDE GATE STEM PENETRATIONS. CORE DRILLING NOT PERMITTED TYPICAL ALL SLIDE GATE STEM PENETRATIONS.

FILE: 215786-12S105.dwg
DATE: Jun 30, 2015-8:37:23am, jwebb

HDR Engineering, Inc.

| ISSUE | DATE | DESCRIPTION |
|---|---|---|
| A | JUNE 2015 | ISSUED FOR BID |

| | |
|---|---|
| PROJECT MANAGER | C. OLSON |
| DESIGNED | M. MOSTAFA |
| DESIGNED | |
| CHECKED | O. TAVANGAR |
| DRAWN | D. ELDREDGE |
| DATE | JUNE 30, 2015 |
| PROJECT NUMBER | 215786 |

REGISTERED PROFESSIONAL ENGINEER MORAMMADREZA MOSTAFA NO. 78649 EXP. 09/30/15 CIVIL STATE OF CALIFORNIA 06/30/15

CITY OF PINOLE CALIFORNIA 1903

PINOLE/HERCULES
WATER POLLUTION
CONTROL PLANT UPGRADE
CLIENT PN

**STRUCTURAL**

**HEADWORKS SECTIONS - 1**

0 1" 2"

| | |
|---|---|
| FILENAME | 215786-12S105 |
| SCALE | AS NOTED |

SHEET **12S105**

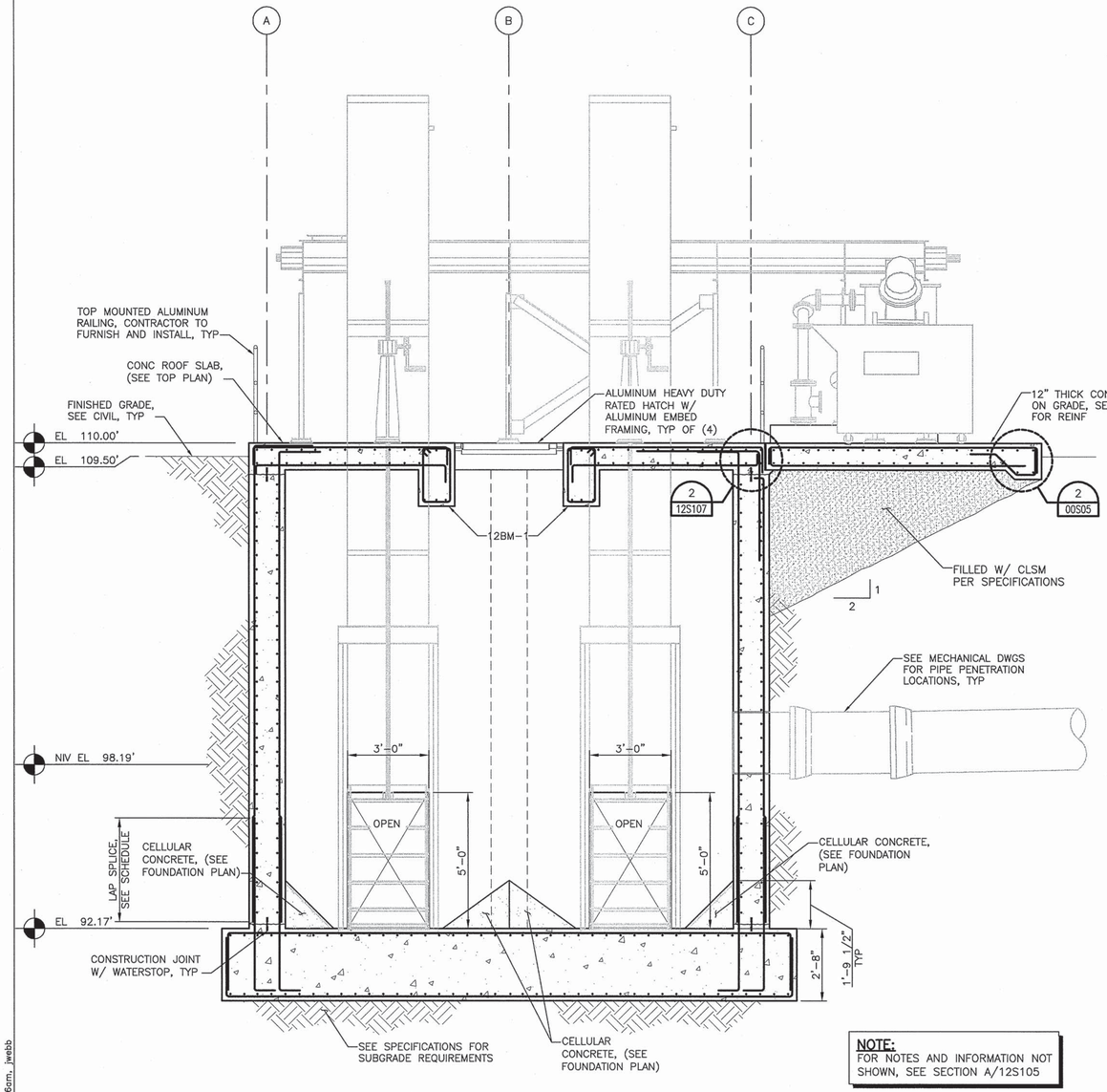


**NOTE:**
FOR NOTES AND INFORMATION NOT SHOWN, SEE SECTION A/12S105

## SECTION
3/8" = 1'-0"
B 12S101

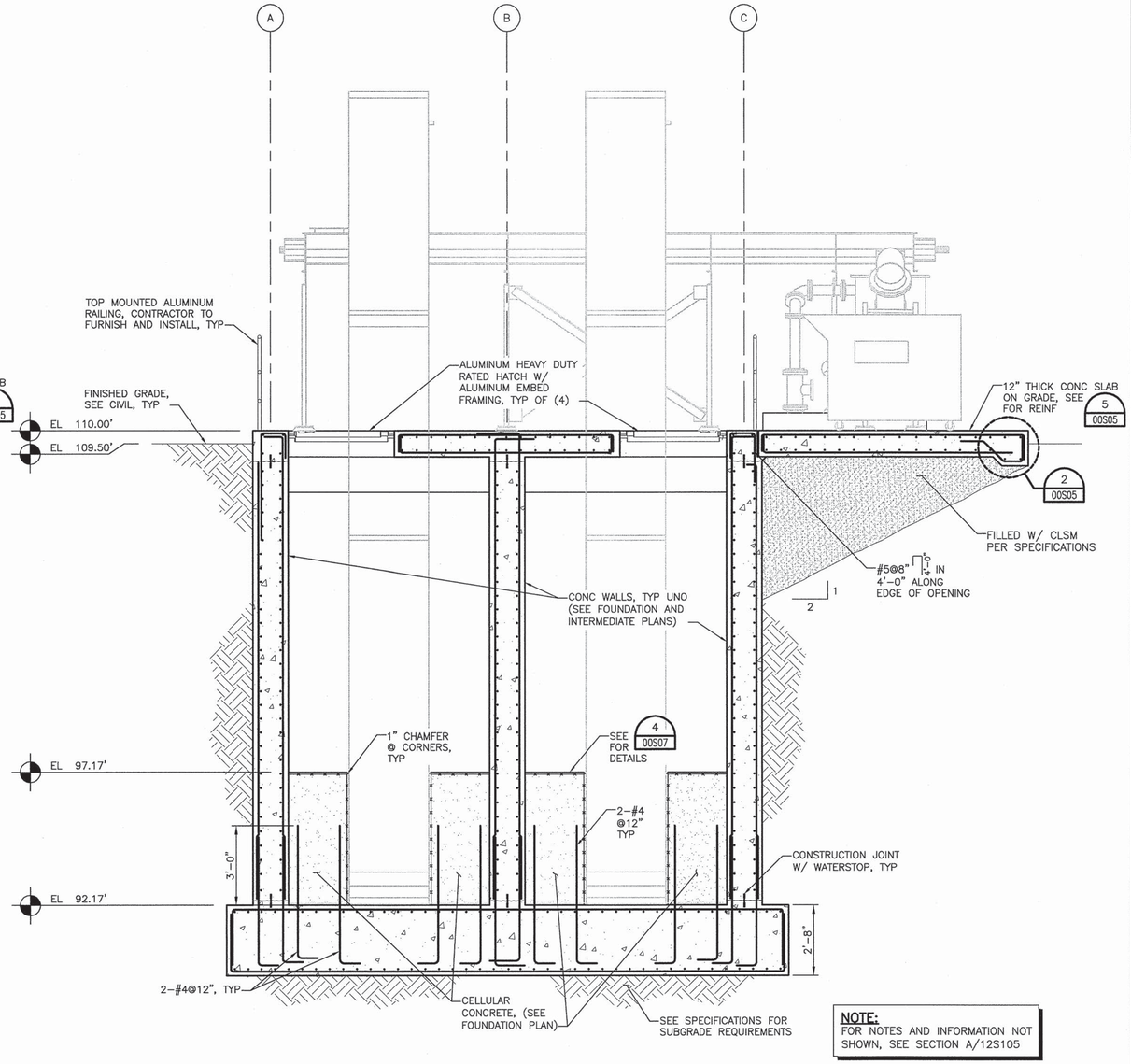


**NOTE:**
FOR NOTES AND INFORMATION NOT SHOWN, SEE SECTION A/12S105

## SECTION
3/8" = 1'-0"
C 12S101

FILE: 215786-12S106.dwg
DATE: Jun 30, 2015-8:37:46am, jwebb

HDR Engineering, Inc.

| ISSUE | DATE | DESCRIPTION |
|---|---|---|
| A | JUNE 2015 | ISSUED FOR BID |

| | |
|---|---|
| PROJECT MANAGER | C. OLSON |
| DESIGNED | M. MOSTAFA |
| DESIGNED | |
| CHECKED | O. TAVANGAR |
| DRAWN | D. ELDREDGE |
| DATE | JUNE 30, 2015 |
| PROJECT NUMBER | 215786 |

REGISTERED PROFESSIONAL ENGINEER MOHAMMADREZA MOSTAFA NO. 78649 EXP. 09/30/15 CIVIL STATE OF CALIFORNIA 06/30/15

CITY OF PINOLE CALIFORNIA 1903

PINOLE/HERCULES
WATER POLLUTION
CONTROL PLANT UPGRADE
CLIENT PN

**STRUCTURAL**

**HEADWORKS SECTIONS - 2**

0 1" 2"

| | |
|---|---|
| FILENAME | 215786-12S106 |
| SCALE | AS NOTED |

SHEET **12S106**

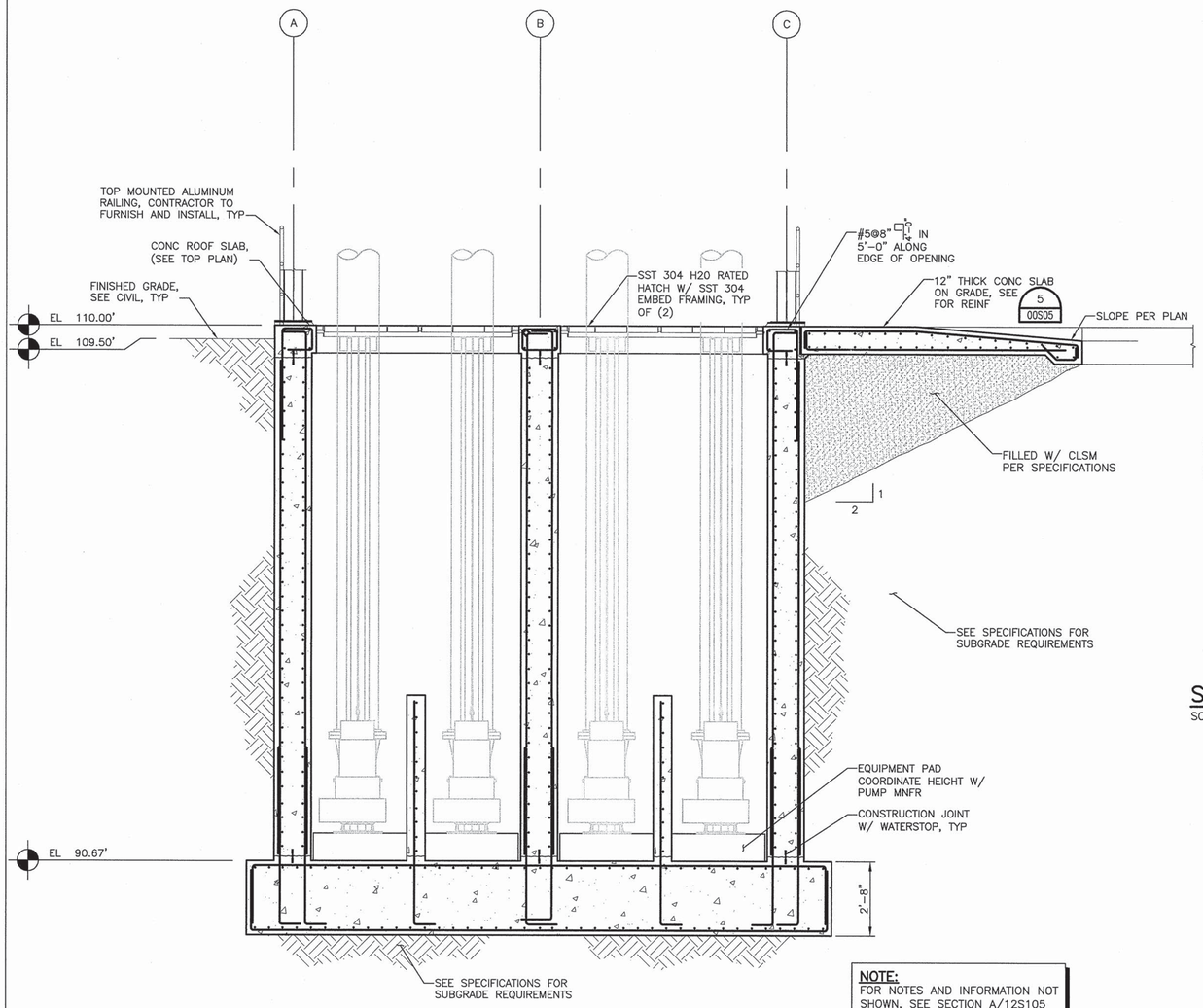


**NOTE:**
FOR NOTES AND INFORMATION NOT SHOWN, SEE SECTION A/12S105

## SECTION
3/8" = 1'-0"
D / 12S101

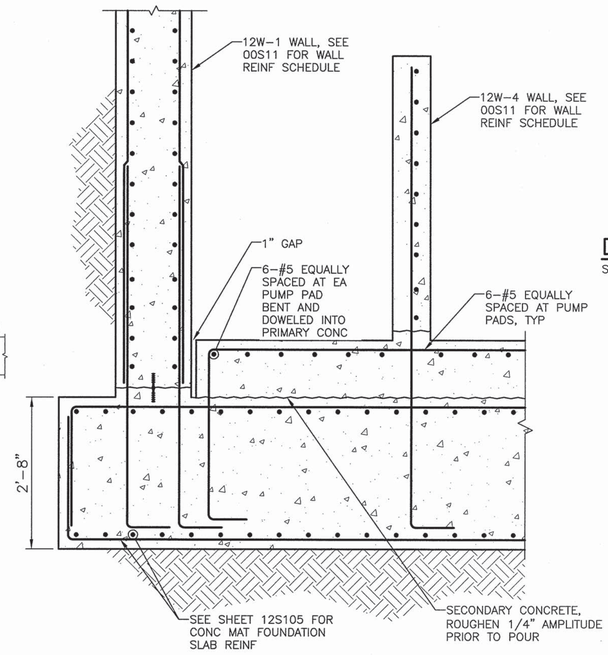


## SECTION
SCALE: 3/4"=1'-0"
1 / 12S101

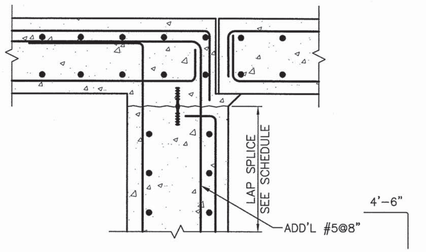


**NOTE:**
FOR INFORMATION NOT SHOWN, SEE SECTION B/12S106

## DETAIL
SCALE:1"=1'-0"
2 / 12S106

FILE: 215786-12S107.dwg
DATE: Jun 30, 2015-8:38:10am, jwebb

HDR Engineering, Inc.

| ISSUE | DATE | DESCRIPTION |
|---|---|---|
| A | JUNE 2015 | ISSUED FOR BID |

| | |
|---|---|
| PROJECT MANAGER | C. OLSON |
| | |
| DESIGNED | M. MOSTAFA |
| DESIGNED | |
| CHECKED | O. TAVANGAR |
| DRAWN | D. ELDREDGE |
| DATE | JUNE 30, 2015 |
| | |
| PROJECT NUMBER | 215786 |

REGISTERED PROFESSIONAL ENGINEER MOHAMMADREZA MOSTAFA NO. 78649 EXP. 09/30/15 CIVIL STATE OF CALIFORNIA
06/30/15

CITY OF PINOLE CALIFORNIA 1903

PINOLE/HERCULES
WATER POLLUTION
CONTROL PLANT UPGRADE
CLIENT PN

**STRUCTURAL**

**HEADWORKS SECTIONS - 3**

0 1" 2"

| | |
|---|---|
| FILENAME | 215786-12S107 |
| SCALE | AS NOTED |

SHEET **12S107**

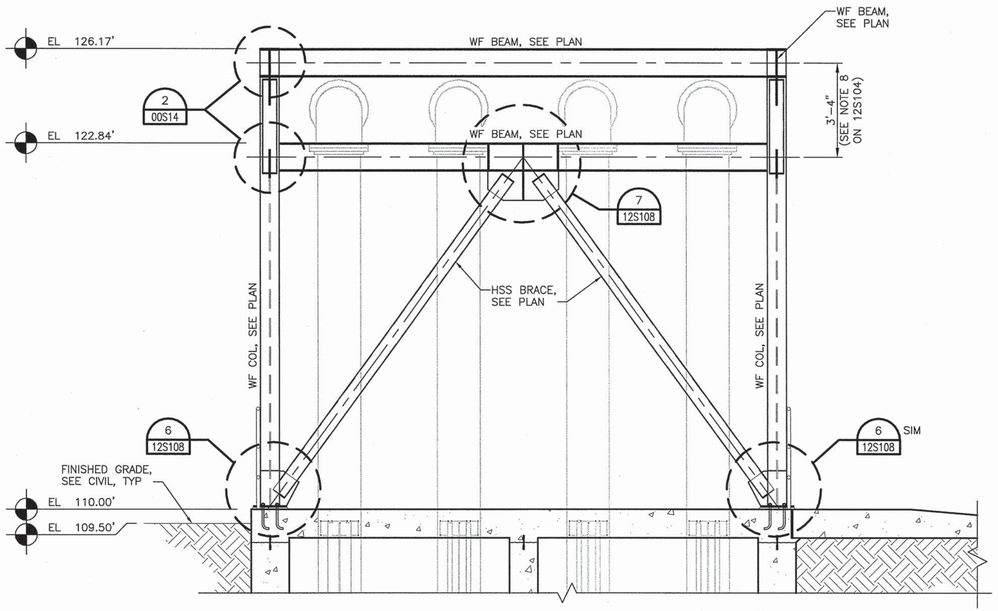


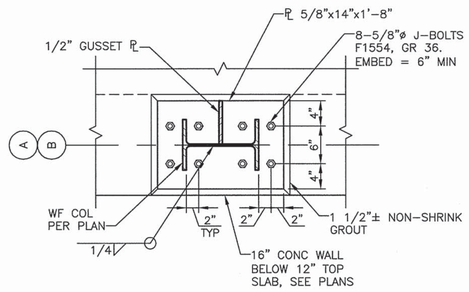


## BASE PLATE DETAIL (TYP)

SCALE: 1"=1'-0"

1 / 12S104

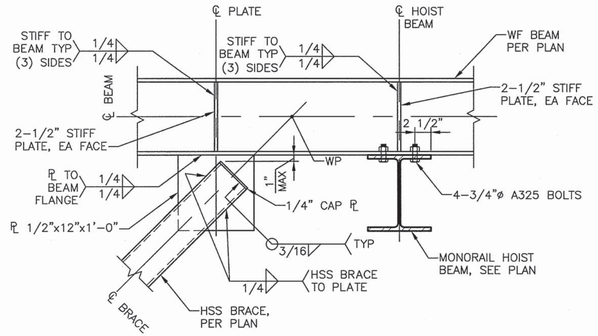


## BRACE TO BEAM CONN

SCALE: 1"=1'-0"

2 / 12S104

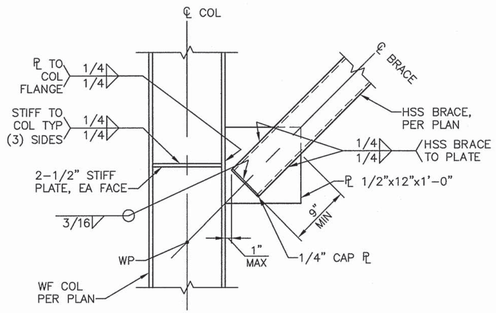


## BRACE TO COL CONN

SCALE: 1"=1'-0"

3 / 12S104

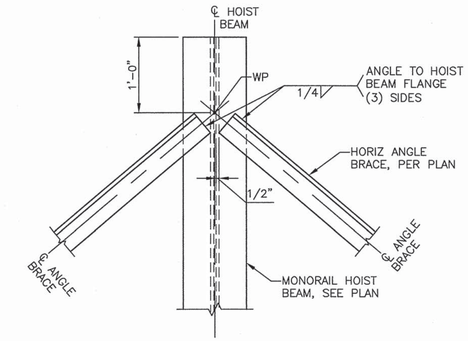


## HORIZ BRACE TO HOIST BEAM CONN

SCALE: 1"=1'-0"

4 / 12S104

## SECTION

3/8" = 1'-0"

C / —

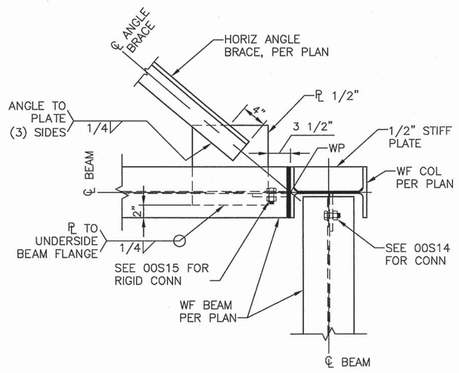


## BRACE TO COL CONN

SCALE: 1"=1'-0"

6 / 12S104

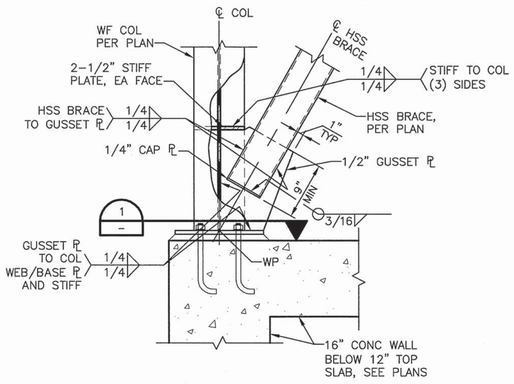


## BRACE TO BEAM CONN

SCALE: 1"=1'-0"

7 / 12S104

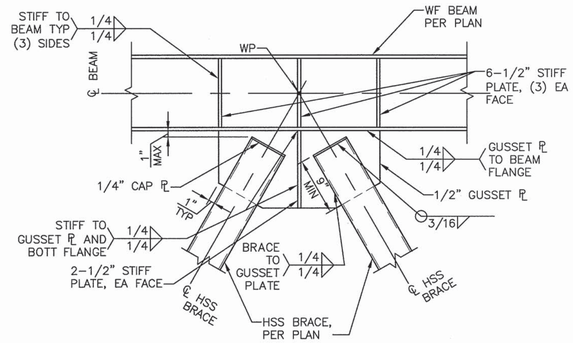


## STIFFENER PLATE TO BEAM CONN

SCALE: 1"=1'-0"

8 / 12S104

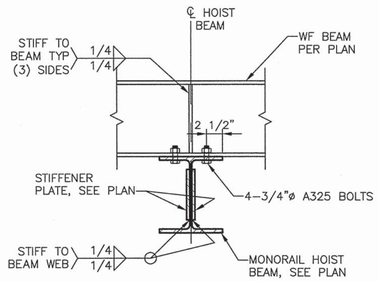


FILE: 215786-12S108.dwg
DATE: Jun 30, 2015-8:38:36am, jwebb

HDR Engineering, Inc.

| ISSUE | DATE | DESCRIPTION |
|---|---|---|
| A | JUNE 2015 | ISSUED FOR BID |

| | |
|---|---|
| PROJECT MANAGER | C. OLSON |
| DESIGNED | M. MOSTAFA |
| DESIGNED | |
| CHECKED | O. TAVANGAR |
| DRAWN | D. ELDREDGE |
| DATE | JUNE 30, 2015 |
| PROJECT NUMBER | 215786 |

REGISTERED PROFESSIONAL ENGINEER MOHAMMADREZA MOSTAFA NO. 78649 EXP. 09/30/15 CIVIL STATE OF CALIFORNIA 06/30/15

CITY OF PINOLE CALIFORNIA 1903

PINOLE/HERCULES
WATER POLLUTION
CONTROL PLANT UPGRADE
CLIENT PN

**STRUCTURAL**

**HEADWORKS SECTIONS AND DETAILS**

0 1" 2"

| | |
|---|---|
| FILENAME | 215786-12S108 |
| SCALE | AS NOTED |

SHEET **12S108**

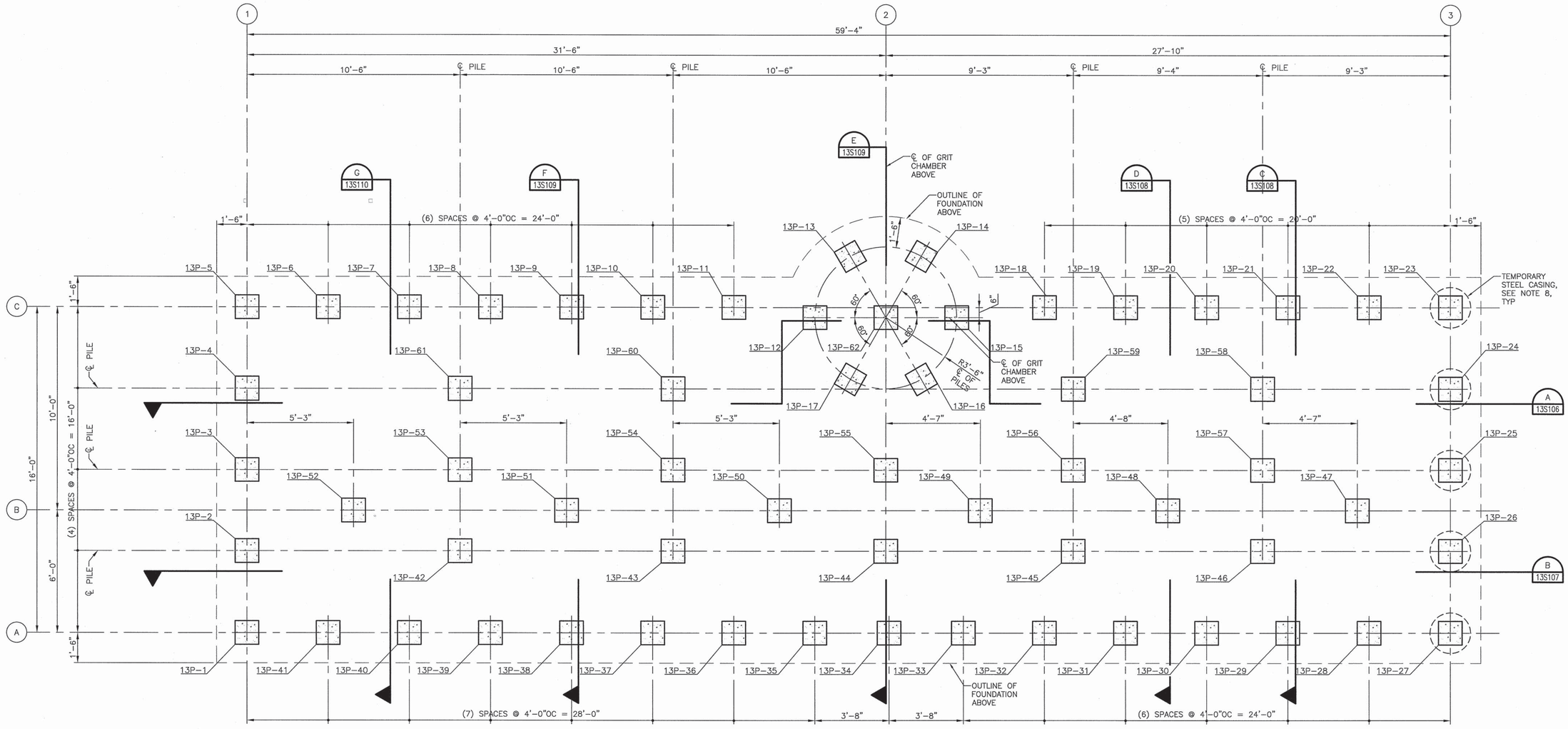


## PILE LAYOUT PLAN

3/8" = 1'-0"

NOTES:

1. FOR GENERAL NOTES, SEE SHEET 00S01 AND 00S02.
2. FOR SPECIAL INSPECTION REQUIREMENTS, SEE 00S03 AND 00S04.
3. FOR TYPICAL CONCRETE DETAILS, SEE SHEETS 00S05 THRU 00S08.
4. FOR TYPICAL REINFORCING DETAILS, SEE 00S09.
5. FOR TYPICAL PILE DETAILS AND SCHEDULE, SEE SHEET 00S10.
6. "13P-X" DENOTES 14" SQUARE PRESTRESSED PRECAST CONCRETE PILES. SEE SHEET 00S10 FOR DETAILS AND SCHEDULE.
7. ALL COLUMNS, WALLS, PILES, AND PILECAPS ARE CENTERED ON GRID LINES, UNLESS NOTED OTHERWISE.
8. FOR PROTECTION OF ADJACENT FOUNDATION, PILES 13P-23 THROUGH 13P-27 SHALL BE DRIVEN THROUGH STEEL CASINGS EXTENDING FROM TOP OF SUBGRADE DOWN TO BOTTOM OF HEADWORKS STRUCTURE FOUNDATION. AFTER PILE INSTALLATION, CASINGS SHALL BE REMOVED AND VOID FILLED WITH LOW DENSITY CONCRETE FILL.

TRUE NORTH

PROJECT NORTH

FILE: 215786-13S101.dwg
DATE: Jun 30, 2015 - 1:04:56pm, rsnider

HDR Engineering, Inc.

| ISSUE | DATE | DESCRIPTION |
|---|---|---|
| A | JUNE 2015 | ISSUED FOR BID |

| | |
|---|---|
| PROJECT MANAGER | C. OLSON |
| DESIGNED | M. MOSTAFA |
| DESIGNED | |
| CHECKED | O. TAVANGAR |
| DRAWN | D. ELDREDGE |
| DATE | JUNE 30, 2015 |
| PROJECT NUMBER | 215786 |

REGISTERED PROFESSIONAL ENGINEER MOHAMMADREZA MOSTAFA NO. 78649 EXP. 09/30/15 CIVIL STATE OF CALIFORNIA 06/30/15

CITY OF PINOLE CALIFORNIA 1903

PINOLE/HERCULES
WATER POLLUTION
CONTROL PLANT UPGRADE
CLIENT PN

**STRUCTURAL**

**GRIT REMOVAL**
**PILE LAYOUT PLAN**

0 1" 2"

| | |
|---|---|
| FILENAME | 215786-13S101 |
| SCALE | AS NOTED |

SHEET **13S101**

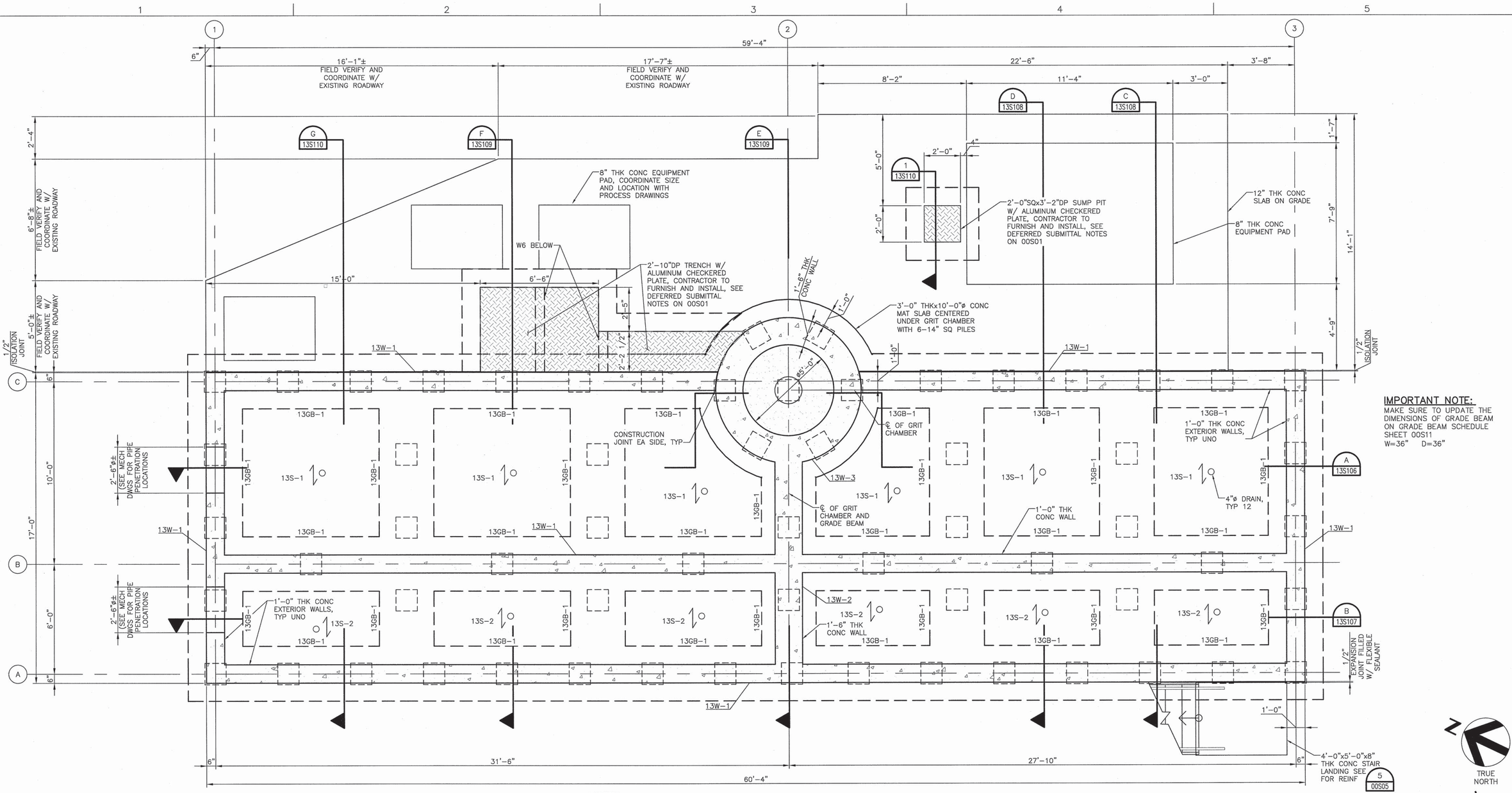


**NOTE:**
PVC LINER IS REQUIRED FOR THIS STRUCTURE. REFER TO NOTE 10

**NOTES:**

1. FOR GENERAL NOTES, SEE SHEET 00S01 AND 00S02.
2. FOR SPECIAL INSPECTION REQUIREMENTS, SEE 00S03 AND 00S04.
3. FOR TYPICAL CONCRETE DETAILS, SEE SHEETS 00S05 THRU 00S08.
4. FOR TYPICAL REINFORCING DETAILS, SEE 00S09.
5. FOR TYPICAL CONCRETE BEAM, SLAB, AND WALL DETAILS AND SCHEDULES, SEE SHEETS 00S11 AND 00S12.
6. "13GB-X" DENOTES CONCRETE GRADE BEAM. SEE SHEET 00S11 FOR DETAILS AND SCHEDULE.
7. "13W-X" DENOTES CONCRETE WALL. SEE SHEET 00S11 FOR WALL REINFORCING SCHEDULE.
8. ALL COLUMNS, WALLS, PILES, AND PILECAPS ARE CENTERED ON GRID LINES, UNLESS NOTED OTHERWISE.
9. ALL DIMENSIONS FOR OPENINGS ARE ROUGH OPENING SIZES, UNLESS NOTED OTHERWISE. CONTRACTOR TO VERIFY LOCATIONS AND SIZE OF OPENINGS WITH PROCESS DRAWINGS, TYPICAL.
10. INSTALL PVC LINER TO VERTICAL, SLOPED AND CEILING CONCRETE SURFACES ABOVE ELEVATION 90.66' AND BELOW ELEVATION 115.75'. PVC LINER TO RUN 6" MINIMUM BEHIND CELLULAR CONCRETE FILLETS FROM VERTICAL SURFACES ABOVE CELLULAR CONCRETE. TOP OF CELLULAR CONCRETE SURFACES DO NOT REQUIRE PVC LINER. VERTICAL SURFACES OF CELLULAR CONCRETE DO REQUIRE PVC LINER. CHANNEL FLOORS AT AND BETWEEN ELEVATION 90.66' TO 92.17' DO NOT REQUIRE PVC LINER. SEE SPECIFICATION SECTION 07101 AND DETAILS ON 00SXX.

**IMPORTANT NOTE:**
MAKE SURE TO UPDATE THE DIMENSIONS OF GRADE BEAM ON GRADE BEAM SCHEDULE SHEET 00S11
W=36" D=36"

TRUE NORTH

PROJECT NORTH

## FOUNDATION PLAN
3/8" = 1'-0"

HDR Engineering, Inc.

| ISSUE | DATE | DESCRIPTION |
|---|---|---|
| A | JUNE 2015 | ISSUED FOR BID |

| | |
|---|---|
| PROJECT MANAGER | C. OLSON |
| | |
| DESIGNED | M. MOSTAFA |
| DESIGNED | |
| CHECKED | O. TAVANGAR |
| DRAWN | D. ELDREDGE |
| DATE | JUNE 30, 2015 |
| | |
| PROJECT NUMBER | 215786 |

REGISTERED PROFESSIONAL ENGINEER MOHAMMADREZA MOSTAFA NO. 78649 EXP. 09/30/15 CIVIL STATE OF CALIFORNIA 06/30/15

CITY OF PINOLE CALIFORNIA 1903

PINOLE/HERCULES WATER POLLUTION CONTROL PLANT UPGRADE
CLIENT PN

**STRUCTURAL**

**GRIT REMOVAL FOUNDATION PLAN**

0 1" 2"

| | |
|---|---|
| FILENAME | 215786-13S102 |
| SCALE | AS NOTED |

SHEET 13S102

FILE: 215786-13S102.dwg
DATE: Jun 30, 2015-1:05:54pm, ranider

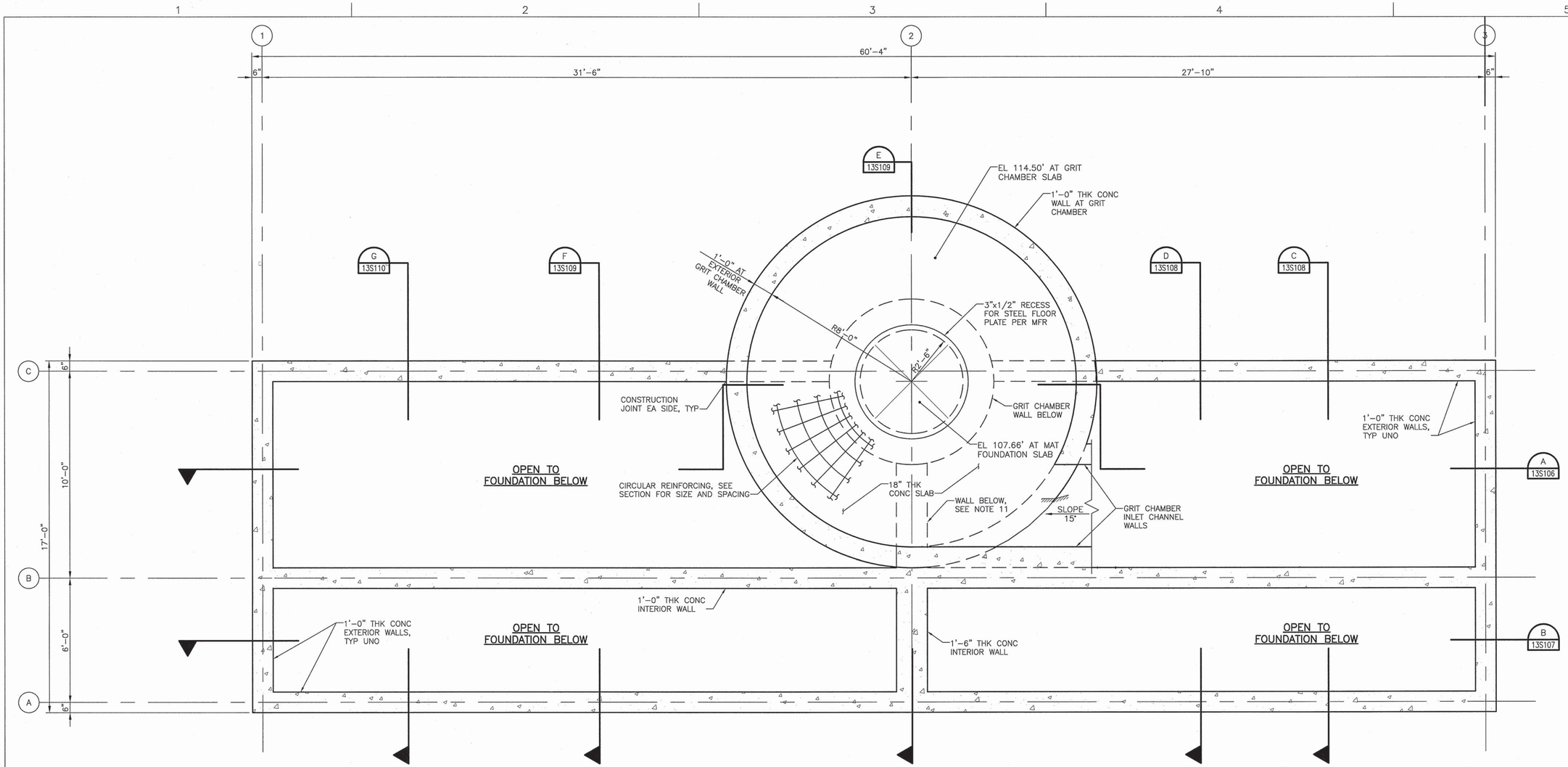


NOTES:

1. FOR GENERAL NOTES, SEE SHEET 00S01 AND 00S02.
2. FOR SPECIAL INSPECTION REQUIREMENTS, SEE 00S03 AND 00S04.
3. FOR TYPICAL CONCRETE DETAILS, SEE SHEETS 00S05 THRU 00S08.
4. FOR TYPICAL REINFORCING DETAILS, SEE 00S09.
5. DENOTES CHANGE ELEVATION (SLOPE UP).
6. "13W-X" DENOTES CONCRETE WALL. SEE SHEET 00S11 FOR WALL REINFORCING SCHEDULE.
7. FOR TYPICAL CONCRETE BEAM, SLAB, AND WALL DETAILS AND SCHEDULES, SEE SHEETS 00S11 AND 00S12.
8. ALL COLUMNS, WALLS, PILES, AND PILECAPS ARE CENTERED ON GRID LINES, UNLESS NOTED OTHERWISE.
9. ALL DIMENSIONS FOR OPENINGS ARE ROUGH OPENING SIZES, UNLESS NOTED OTHERWISE.
10. INSTALL PVC LINER TO VERTICAL, SLOPED AND CEILING CONCRETE SURFACES ABOVE ELEVATION 115.75' AND BELOW ELEVATION 122.00'. PVC LINER TO RUN 6" MINIMUM BEHIND CELLULAR CONCRETE FILLETS FROM VERTICAL SURFACES ABOVE CELLULAR CONCRETE. TOP OF CELLULAR CONCRETE SURFACES DO NOT REQUIRE PVC LINER. VERTICAL SURFACES OF CELLULAR CONCRETE DO REQUIRE PVC LINER. CHANNEL FLOORS AT AND BETWEEN ELEVATION 115.75' TO 117.42' DO NOT REQUIRE PVC LINER. SEE SPECIFICATION SECTION 07101 AND DETAILS ON 00SXX.
11. THE WALL REBAR IS DOWELED INTO THE SLAB OF THE GRIT CHAMBER.

TRUE NORTH

PROJECT NORTH

## INTERMEDIATE PLAN – @ EL 114.50'

3/8" = 1'-0"

FILE: 215786-13S103.dwg
DATE: Jun 30, 2015-1:09:03pm, rsnider

HDR Engineering, Inc.

| ISSUE | DATE | DESCRIPTION |
|---|---|---|
| A | JUNE 2015 | ISSUED FOR BID |

| | |
|---|---|
| PROJECT MANAGER | C. OLSON |
| DESIGNED | M. MOSTAFA |
| DESIGNED | |
| CHECKED | O. TAVANGAR |
| DRAWN | D. ELDREDGE |
| DATE | JUNE 30, 2015 |
| PROJECT NUMBER | 215786 |

REGISTERED PROFESSIONAL ENGINEER MOHAMMADREZA MOSTAFA NO. 78649 EXP. 09/30/15 CIVIL STATE OF CALIFORNIA 06/30/15

CITY OF PINOLE CALIFORNIA 1903

PINOLE/HERCULES
WATER POLLUTION
CONTROL PLANT UPGRADE
CLIENT PN

**STRUCTURAL**

**GRIT REMOVAL**
**INTERMEDIATE PLAN - AT ELEVATION 114.50'**

0 1" 2"

| | |
|---|---|
| FILENAME | 215786-13S103 |
| SCALE | AS NOTED |

SHEET **13S103**

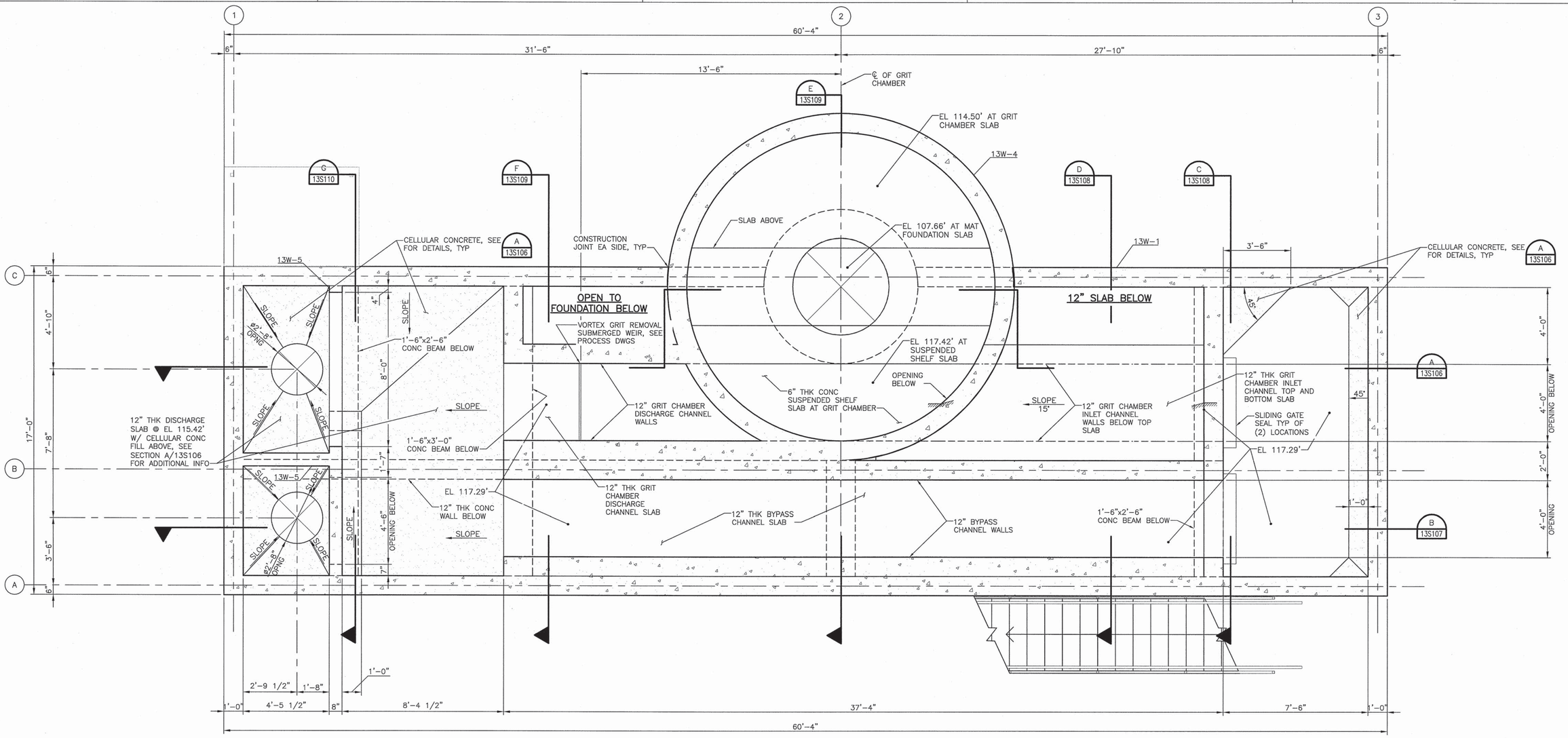


## INTERMEDIATE PLAN – @ EL 121.00'

3/8" = 1'-0"

NOTES:

1. FOR GENERAL NOTES, SEE SHEET 00S01 AND 00S02.
2. FOR SPECIAL INSPECTION REQUIREMENTS, SEE 00S03 AND 00S04.
3. FOR TYPICAL CONCRETE DETAILS, SEE SHEETS 00S05 THRU 00S08.
4. FOR TYPICAL REINFORCING DETAILS, SEE 00S09.
5. DENOTES CHANGE ELEVATION (SLOPE UP).
6. DENOTES CHANGE ELEVATION (SLOPE DOWN).
7. "13W–X" DENOTES CONCRETE WALL. SEE SHEET 00S11 FOR WALL REINFORCING SCHEDULE.
8. FOR TYPICAL CONCRETE BEAM, SLAB, AND WALL DETAILS AND SCHEDULES, SEE SHEETS 00S11 AND 00S12.
9. ALL COLUMNS, WALLS, PILES, AND PILECAPS ARE CENTERED ON GRID LINES, UNLESS NOTED OTHERWISE.
10. ALL DIMENSIONS FOR OPENINGS ARE ROUGH OPENING SIZES, UNLESS NOTED OTHERWISE. CONTRACTOR TO VERIFY SIZE AND LOCATIONS OF OPENINGS WITH PROCESS DRAWINGS, TYPICAL.
11. SEE NOTE 10 ON SHEET 13S103 FOR PVC LINER REQUIREMENTS.

TRUE NORTH

PROJECT NORTH

FILE: 215786-13S104.dwg
DATE: Jun 30, 2015-1:10:00pm, rsnider

HDR Engineering, Inc.

| ISSUE | DATE | DESCRIPTION |
|---|---|---|
| A | JUNE 2015 | ISSUED FOR BID |

| | |
|---|---|
| PROJECT MANAGER | C. OLSON |
| DESIGNED | M. MOSTAFA |
| DESIGNED | |
| CHECKED | O. TAVANGAR |
| DRAWN | D. ELDREDGE |
| DATE | JUNE 30, 2015 |
| PROJECT NUMBER | 215786 |

REGISTERED PROFESSIONAL ENGINEER MOHAMMADREZA MOSTAFA NO. 78649 EXP. 09/30/15 CIVIL STATE OF CALIFORNIA 06/30/15

CITY OF PINOLE CALIFORNIA 1903

PINOLE/HERCULES WATER POLLUTION CONTROL PLANT UPGRADE CLIENT PN

**STRUCTURAL**

**GRIT REMOVAL INTERMEDIATE PLAN - AT ELEVATION 121.00'**

0 1" 2"

| | |
|---|---|
| FILENAME | 215786-13S104 |
| SCALE | AS NOTED |

SHEET **13S104**

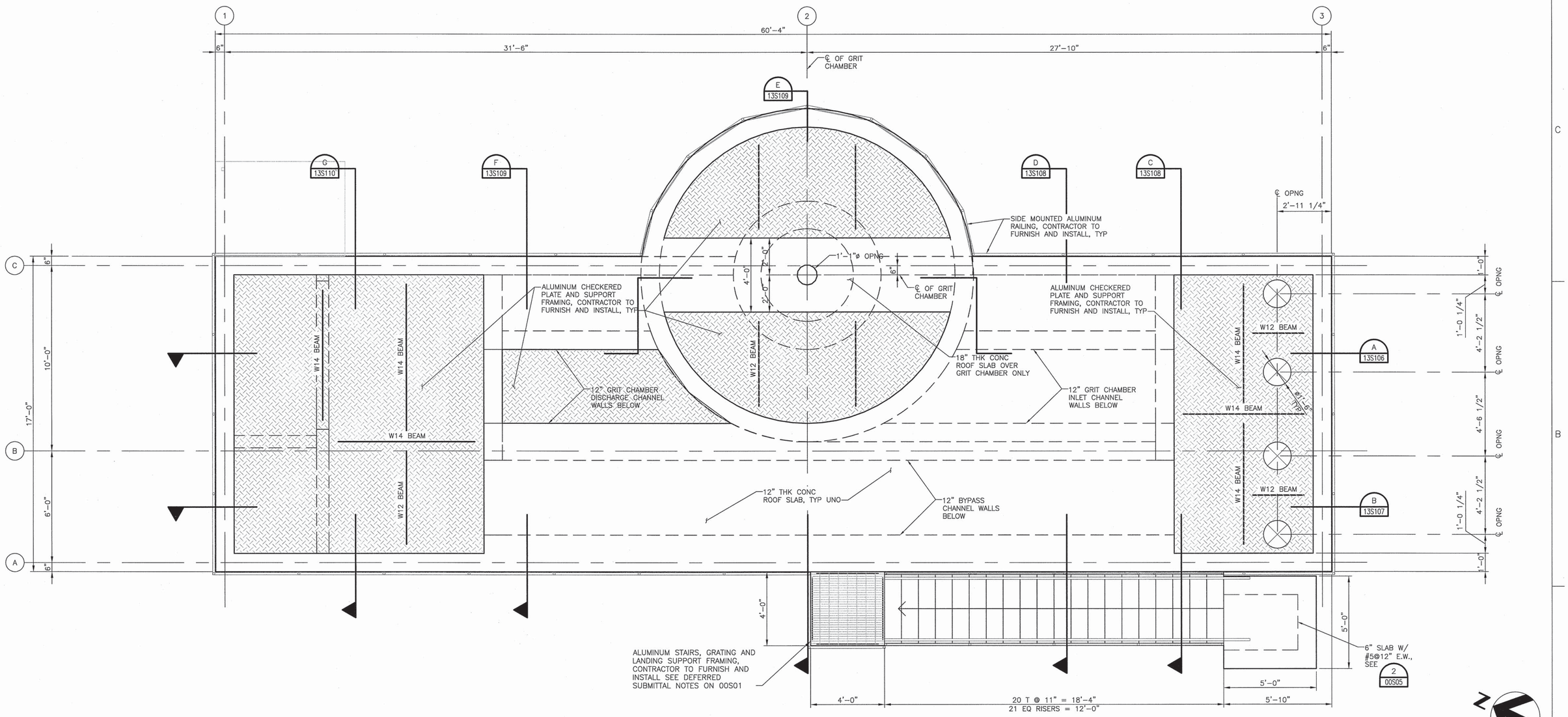


## TOP PLAN
3/8" = 1'–0"

NOTES:

1. FOR GENERAL NOTES, SEE SHEET 00S01 AND 00S02.
2. FOR SPECIAL INSPECTION REQUIREMENTS, SEE 00S03 AND 00S04.
3. FOR TYPICAL CONCRETE DETAILS, SEE SHEETS 00S05 THRU 00S08.
4. FOR TYPICAL REINFORCING DETAILS, SEE 00S09.
5. FOR TYPICAL CONCRETE BEAM, SLAB, AND REINFORCEMENTS SEE SHEETS 13S107 THRU 13S110.
6. ALUMINUM CHECKERED PLATE AND SUPPORT BEAM SIZES, RAILINGS WILL BE DESIGNED PER THE CONTRACTOR'S DESIGN. SEE DEFERRED SUBMITTALS ON SHEET 00S01.
7. FOR TYPICAL CHECKERED PLATE DETAILS, SEE SHEETS 00S19 AND 00S20.
8. FOR TYPICAL RAILING DETAILS, SEE SHEETS 00S19 AND 00S20.
9. ALL COLUMNS, WALLS, PILES, AND PILECAPS ARE CENTERED ON GRID LINES, UNLESS NOTED OTHERWISE.
10. ALL DIMENSIONS FOR OPENINGS ARE ROUGH OPENING SIZES, UNLESS NOTED OTHERWISE. CONTRACTOR TO VERIFY SIZE AND LOCATIONS OF THE OPENINGS WITH PROCESS DRAWINGS, TYPICAL.
11. SEE NOTE 10 ON SHEET 13S103 FOR PVC LINER REQUIREMENTS.

TRUE NORTH

PROJECT NORTH

FILE: 215786–13S105.dwg
DATE: Jun 30, 2015–1:10:51pm, rsnider

HDR Engineering, Inc.

| ISSUE | DATE | DESCRIPTION |
|---|---|---|
| A | JUNE 2015 | ISSUED FOR BID |

| | |
|---|---|
| PROJECT MANAGER | C. OLSON |
| DESIGNED | M. MOSTAFA |
| DESIGNED | |
| CHECKED | O. TAVANGAR |
| DRAWN | D. ELDREDGE |
| DATE | JUNE 30, 2015 |
| PROJECT NUMBER | 215786 |

REGISTERED PROFESSIONAL ENGINEER MORAMMADREZA MOSTAFA NO. 78649 EXP. 09/30/15 CIVIL STATE OF CALIFORNIA 06/30/15

CITY OF PINOLE CALIFORNIA 1903

PINOLE/HERCULES
WATER POLLUTION
CONTROL PLANT UPGRADE
CLIENT PN

**STRUCTURAL**

**GRIT REMOVAL TOP PLAN**

0 1" 2"

| FILENAME | 215786–13S105 |
|---|---|
| SCALE | AS NOTED |

SHEET 13S105

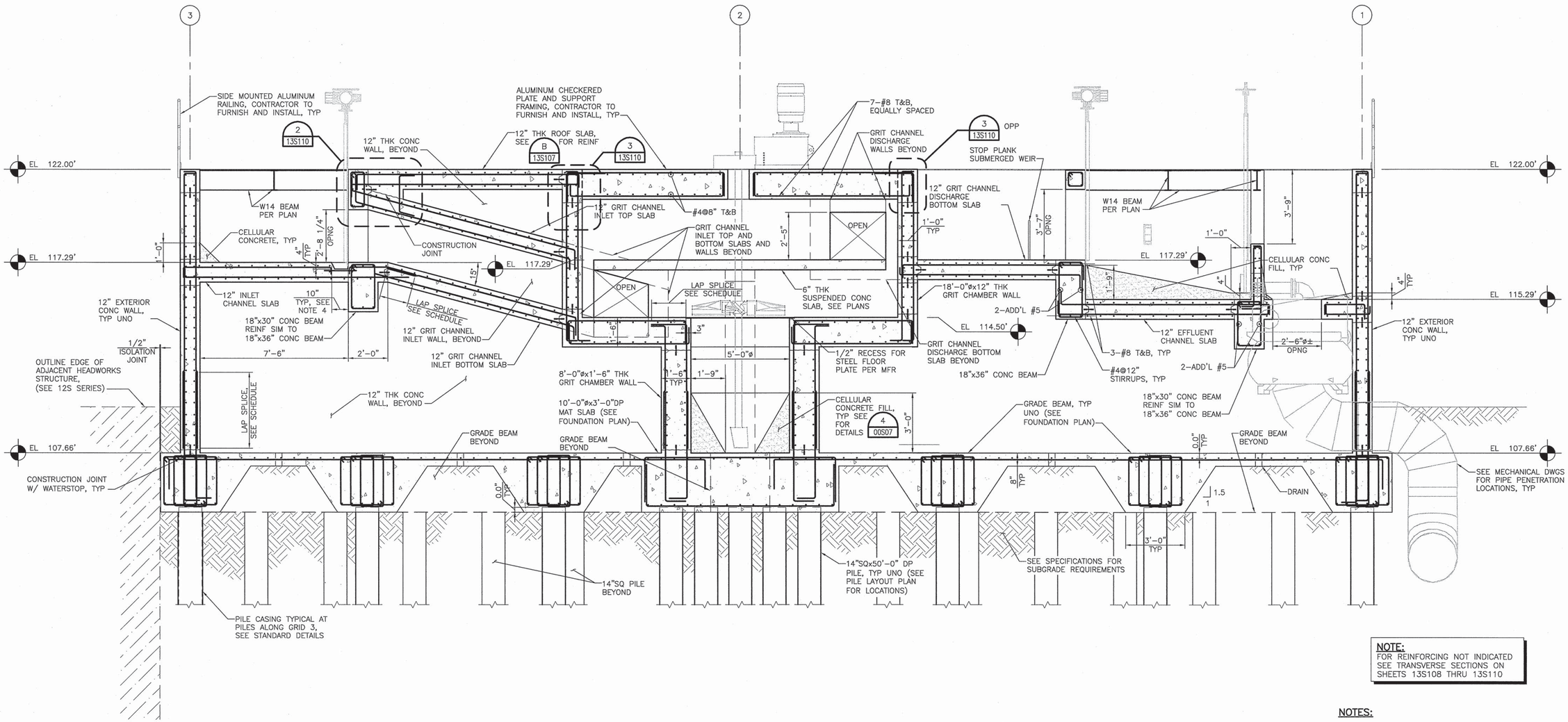


## SECTION

3/8" = 1'-0"

A 13S101

**NOTE:**
FOR REINFORCING NOT INDICATED SEE TRANSVERSE SECTIONS ON SHEETS 13S108 THRU 13S110

**NOTES:**

1. FOR WALL MARKS AND WALL SCHEDULE SEE 13S102/103 AND 00S11 FOR ALL WALL REINFORCING NOT INDICATED IN THE SECTIONS.
2. FOR PIPE CONNECTIONS, EQUIPMENT AND DETAILS SEE MECHANICAL DRAWINGS.
3. FOR CELLULAR CONCRETE SEE SPECIFICATIONS. FOR DETAILS SEE SHEET 00S07.
4. CONTRACTOR TO VERIFY THE LOCATIONS AND DIMENSIONS OF THE GATE RECESS PER THE MANUFACTURERS DRAWINGS.

FILE: 215786-13S106.dwg
DATE: Jun 30, 2015-11:17:21 am, rsnider

HDR Engineering, Inc.

| ISSUE | DATE | DESCRIPTION |
|---|---|---|
| A | JUNE 2015 | ISSUED FOR BID |

| | |
|---|---|
| PROJECT MANAGER | C. OLSON |
| DESIGNED | M. MOSTAFA |
| DESIGNED | |
| CHECKED | O. TAVANGAR |
| DRAWN | D. ELDREDGE |
| DATE | JUNE 30, 2015 |
| PROJECT NUMBER | 215786 |

REGISTERED PROFESSIONAL ENGINEER MOHAMMADREZA MOSTAFA NO. 78649 EXP. 09/30/15 CIVIL STATE OF CALIFORNIA 6/30/15

CITY OF PINOLE CALIFORNIA 1903

PINOLE/HERCULES WATER POLLUTION CONTROL PLANT UPGRADE CLIENT PN

**STRUCTURAL**

**GRIT REMOVAL SECTIONS - 1**

0 1" 2"

| | |
|---|---|
| FILENAME | 215786-13S106 |
| SCALE | AS NOTED |

SHEET **13S106**

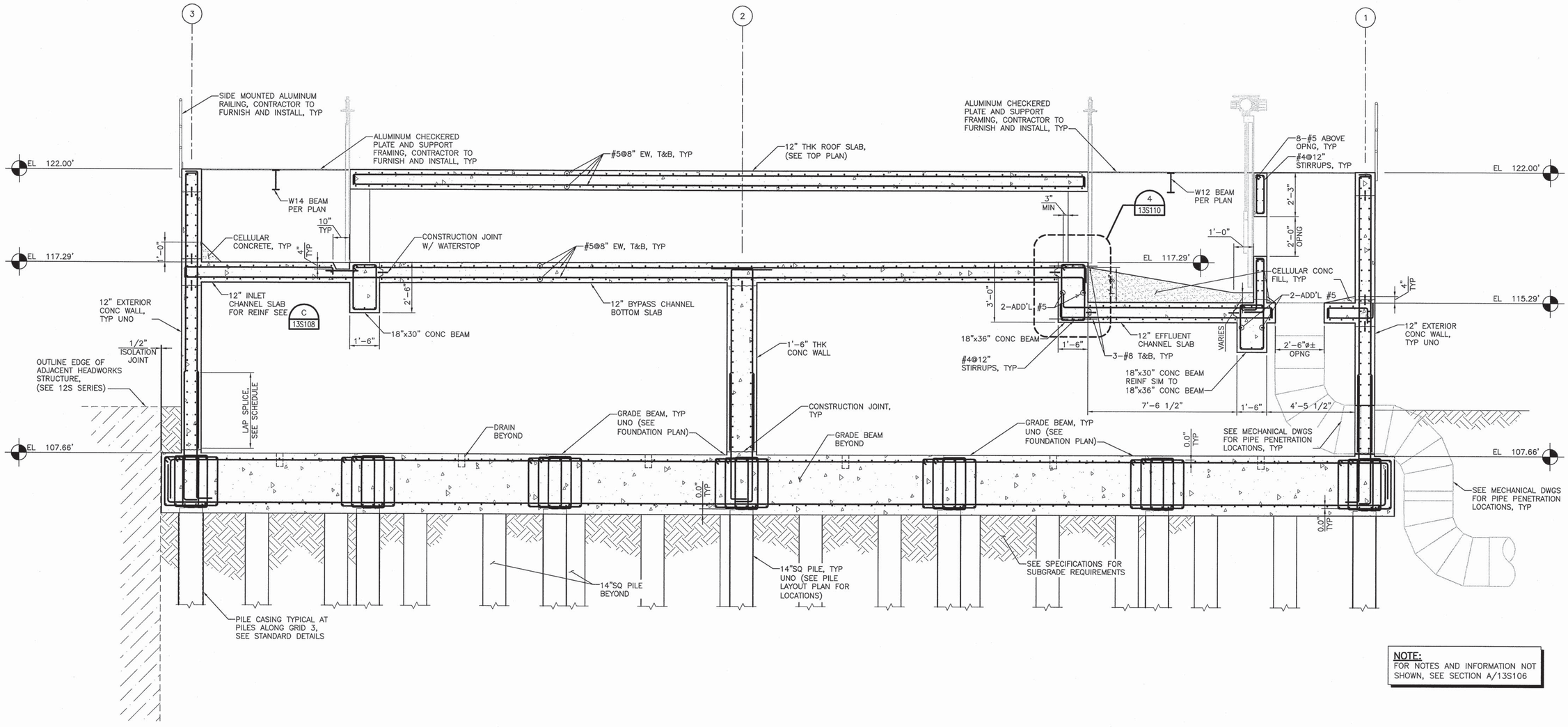


**NOTE:**
FOR NOTES AND INFORMATION NOT SHOWN, SEE SECTION A/13S106

## SECTION
3/8" = 1'-0"

B 13S101

FILE: 215786-13S107.dwg
DATE: Jun 30, 2015-8:40:20am, jwebb

HDR Engineering, Inc.

| ISSUE | DATE | DESCRIPTION |
|---|---|---|
| A | JUNE 2015 | ISSUED FOR BID |

| | |
|---|---|
| PROJECT MANAGER | C. OLSON |
| DESIGNED | M. MOSTAFA |
| DESIGNED | |
| CHECKED | O. TAVANGAR |
| DRAWN | D. ELDREDGE |
| DATE | JUNE 30, 2015 |
| PROJECT NUMBER | 215786 |

REGISTERED PROFESSIONAL ENGINEER MOHAMMADREZA MOSTAFA NO. 78649 EXP. 09/30/15 CIVIL STATE OF CALIFORNIA
06/30/15

CITY OF PINOLE CALIFORNIA 1903

PINOLE/HERCULES
WATER POLLUTION
CONTROL PLANT UPGRADE
CLIENT PN

**STRUCTURAL**

**GRIT REMOVAL SECTIONS - 2**

0 1" 2"

| | |
|---|---|
| FILENAME | 215786-13S107 |
| SCALE | AS NOTED |

SHEET **13S107**

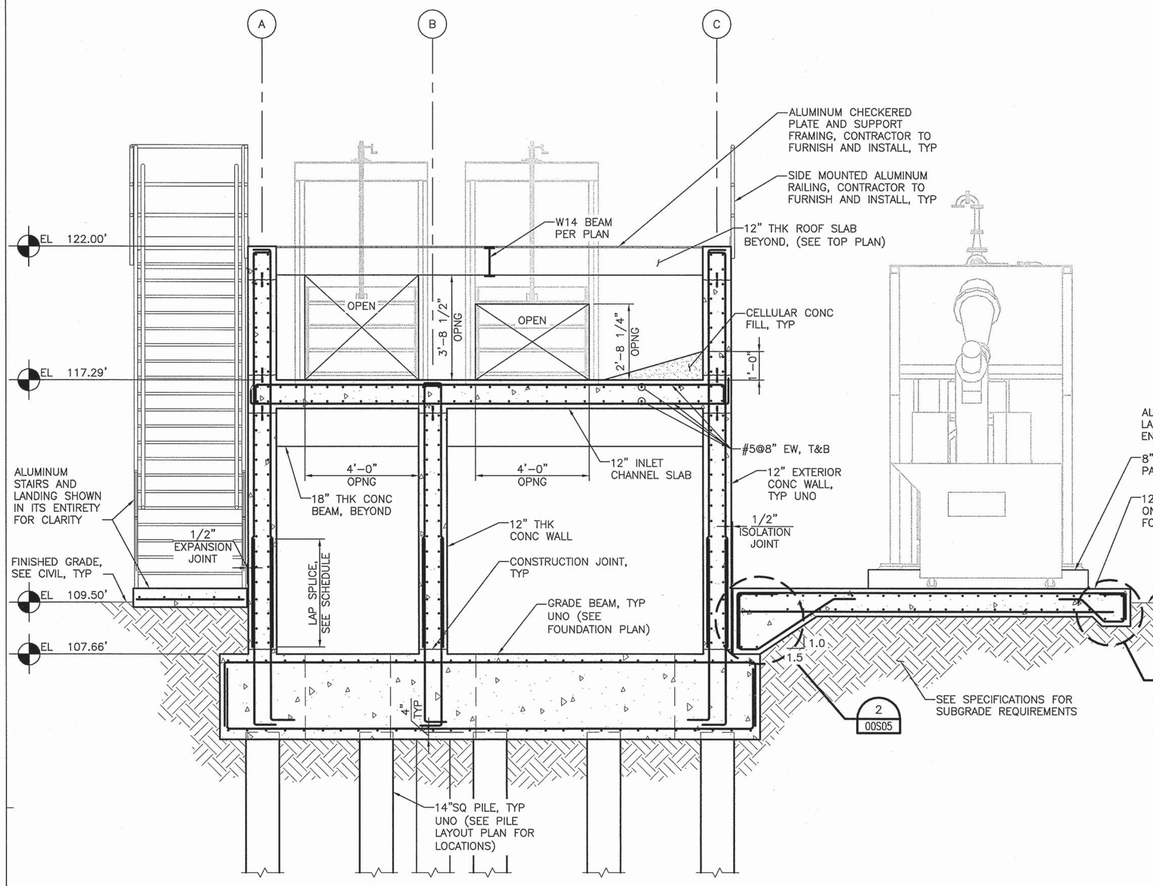


NOTE:
FOR NOTES AND INFORMATION NOT SHOWN, SEE SECTION A/13S106

SECTION
3/8" = 1'-0"
C
13S101

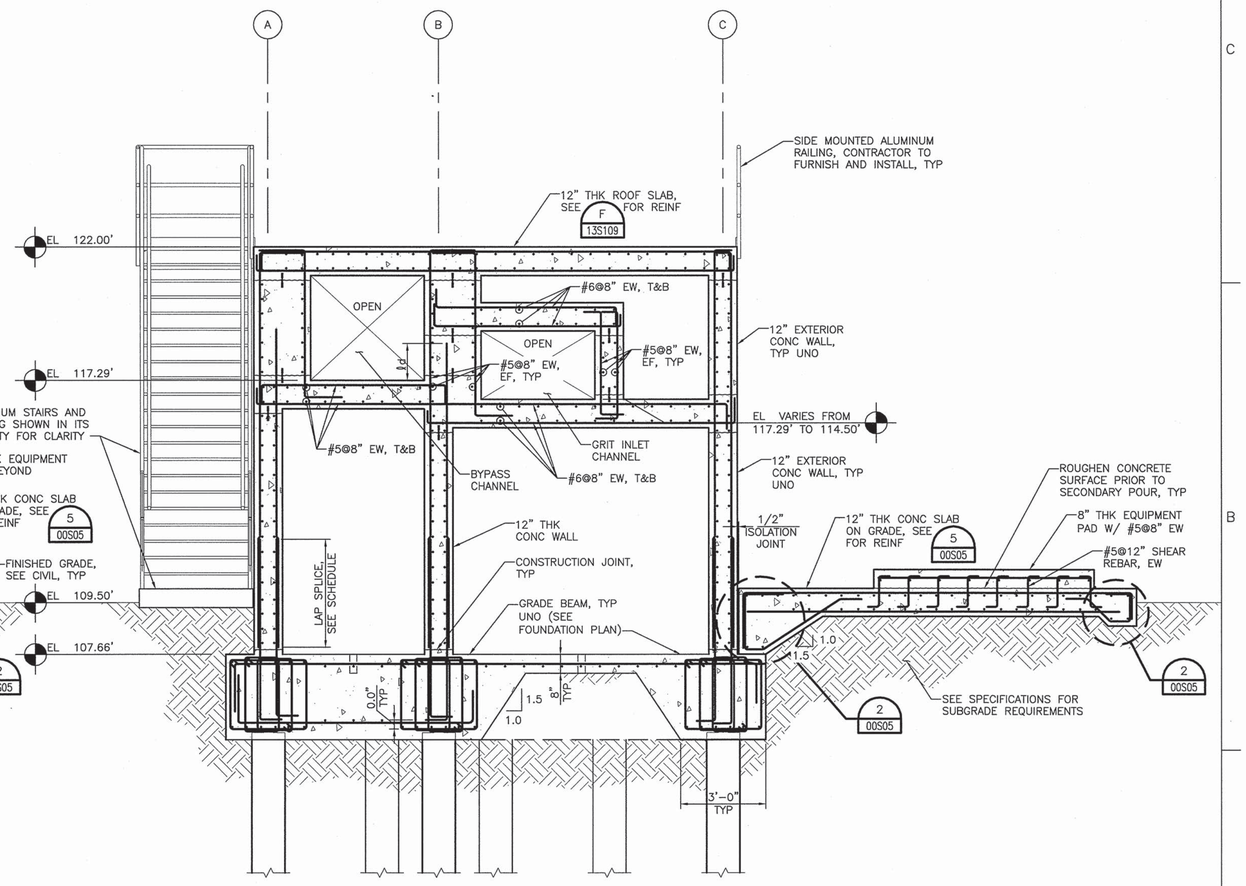


NOTE:
FOR NOTES AND INFORMATION NOT SHOWN, SEE SECTION A/13S106

SECTION
3/8" = 1'-0"
D
13S101

FILE: 215786-13S108.dwg
DATE: Jun 30, 2015-8:40:49am, jwebb

HDR
HDR Engineering, Inc.

| ISSUE | DATE | DESCRIPTION |
|---|---|---|
| A | JUNE 2015 | ISSUED FOR BID |

| | |
|---|---|
| PROJECT MANAGER | C. OLSON |
| DESIGNED | M. MOSTAFA |
| DESIGNED | |
| CHECKED | O. TAVANGAR |
| DRAWN | D. ELDREDGE |
| DATE | JUNE 30, 2015 |
| PROJECT NUMBER | 215786 |

REGISTERED PROFESSIONAL ENGINEER
MOHAMMADREZA MOSTAFA
NO. 78649
EXP. 09/30/15
CIVIL
STATE OF CALIFORNIA
06/30/15

CITY OF PINOLE CALIFORNIA 1903

PINOLE/HERCULES
WATER POLLUTION
CONTROL PLANT UPGRADE
CLIENT PN

**STRUCTURAL**

**GRIT REMOVAL SECTIONS - 3**

0 1" 2"

| | |
|---|---|
| FILENAME | 215786-13S108 |
| SCALE | AS NOTED |

SHEET
**13S108**

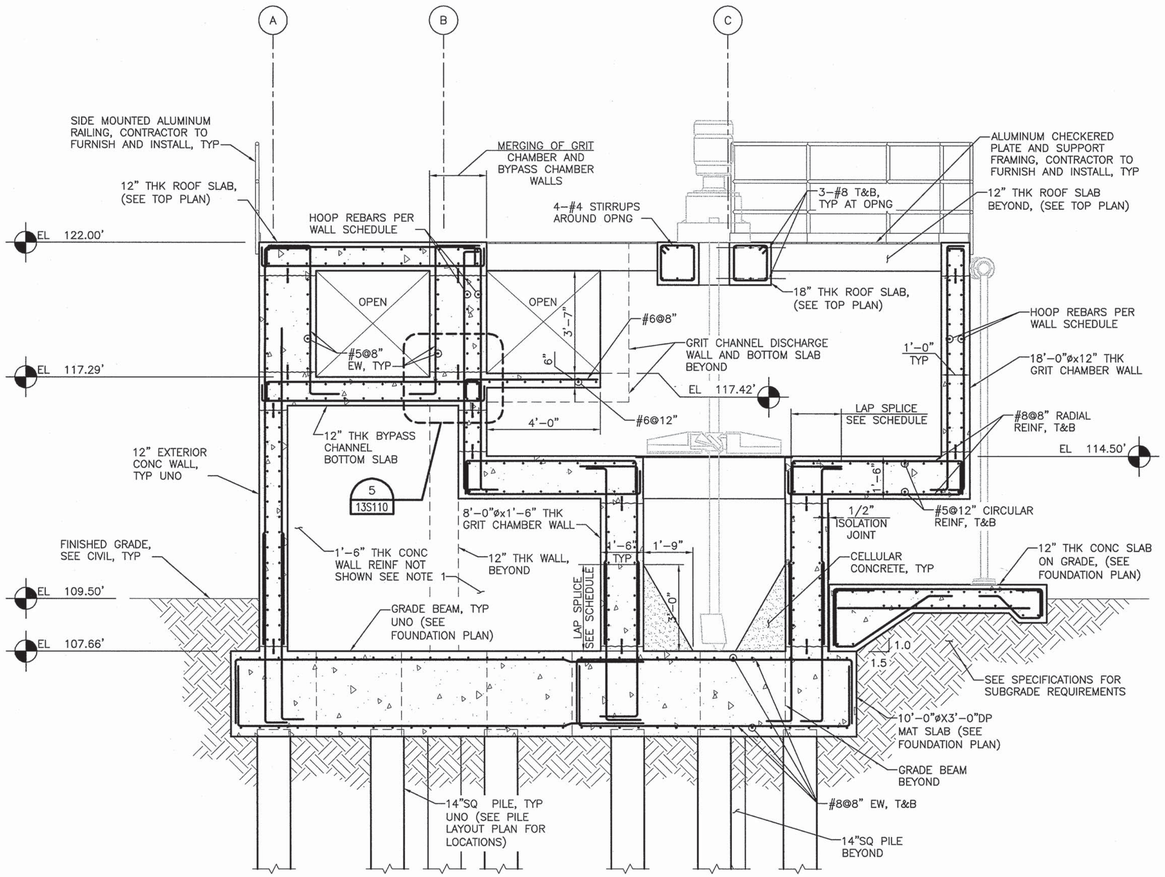


**NOTES:**
FOR NOTES AND INFORMATION NOT SHOWN, SEE SECTION A/13S106.

1. THE HORIZ & VERT REBAR TO BE DOWELED INTO THE PERP SLABS AND WALLS.

SECTION
3/8" = 1'-0"
E 13S101

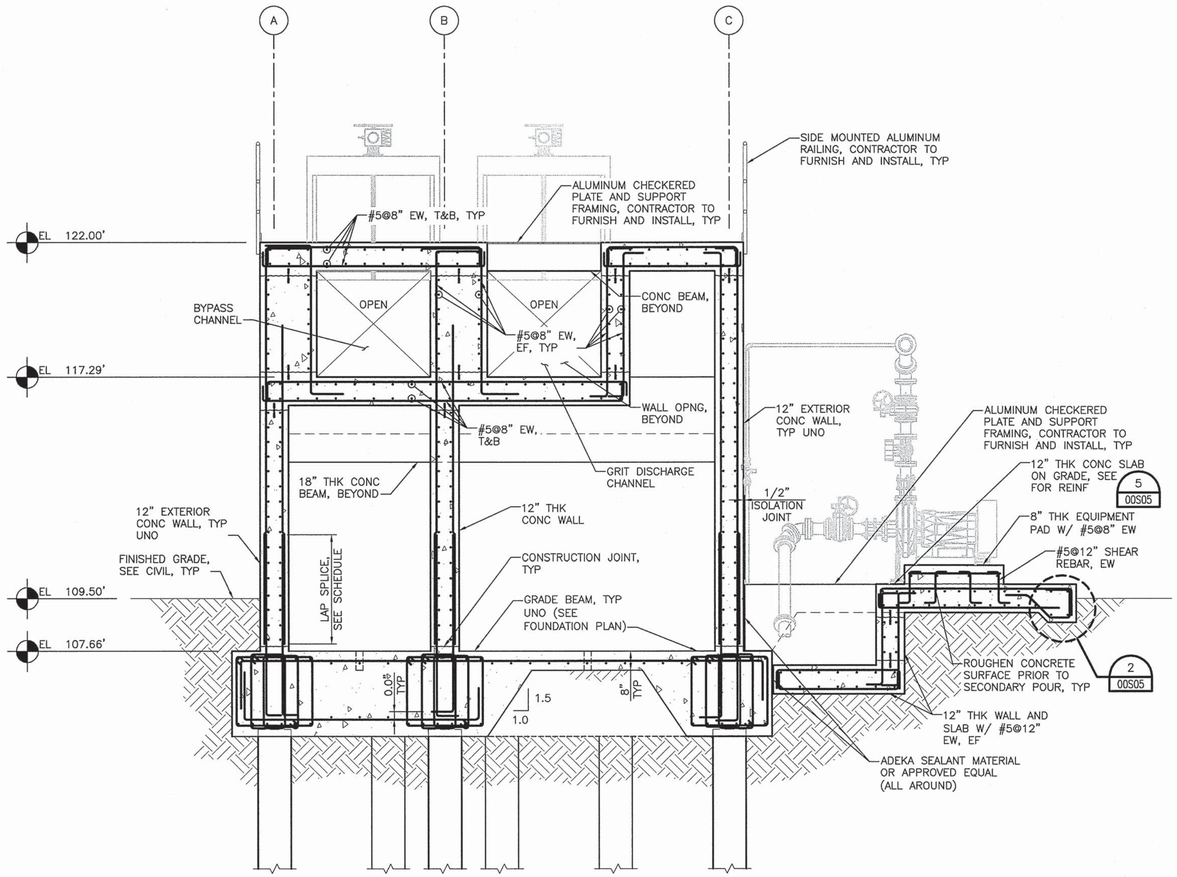


**NOTE:**
FOR NOTES AND INFORMATION NOT SHOWN, SEE SECTION A/13S106

SECTION
3/8" = 1'-0"
F 13S101

FILE: 215786-13S109.dwg
DATE: Jun 30, 2015-8:41:11am, jwebb

HDR
HDR Engineering, Inc.

| ISSUE | DATE | DESCRIPTION |
|---|---|---|
| A | JUNE 2015 | ISSUED FOR BID |

| | |
|---|---|
| PROJECT MANAGER | C. OLSON |
| DESIGNED | M. MOSTAFA |
| DESIGNED | |
| CHECKED | O. TAVANGAR |
| DRAWN | D. ELDREDGE |
| DATE | JUNE 30, 2015 |
| PROJECT NUMBER | 215786 |

REGISTERED PROFESSIONAL ENGINEER MOHAMMADREZA MOSTAFA NO. 78649 EXP. 09/30/15 CIVIL STATE OF CALIFORNIA
06/30/15

CITY OF PINOLE CALIFORNIA 1903

PINOLE/HERCULES
WATER POLLUTION
CONTROL PLANT UPGRADE
CLIENT PN

**STRUCTURAL**

**GRIT REMOVAL SECTIONS - 4**

0 1" 2"

| | |
|---|---|
| FILENAME | 215786-13S109 |
| SCALE | AS NOTED |

SHEET
**13S109**

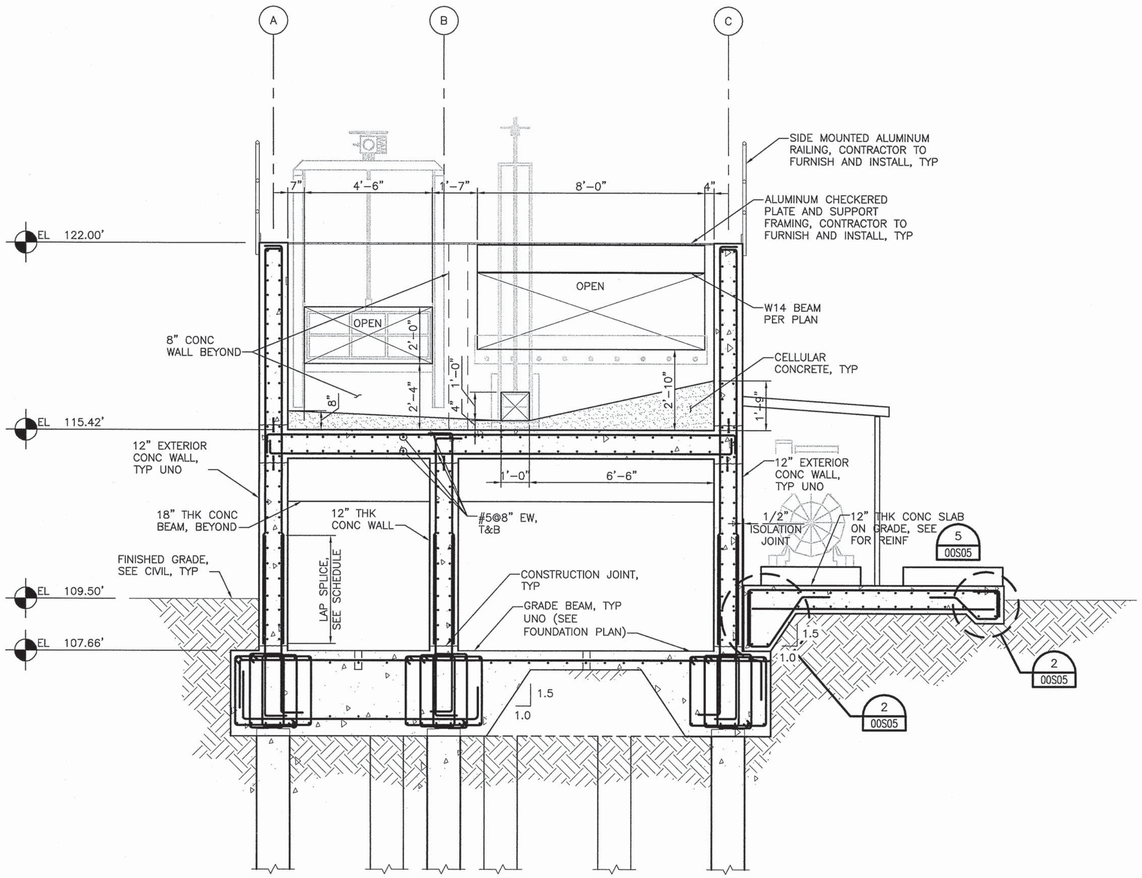


## SECTION
3/8" = 1'-0"
G
13S101

**NOTE:**
FOR NOTES AND INFORMATION NOT SHOWN, SEE SECTION A/13S106

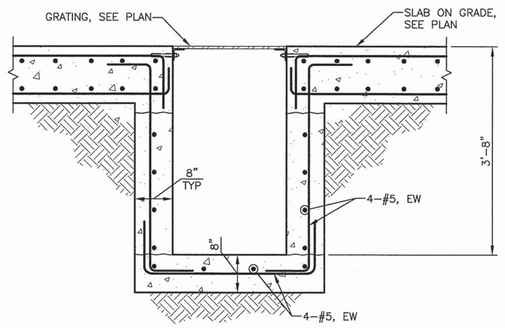


## SUMP DETAIL
3/4"=1'-0"
1
13S102

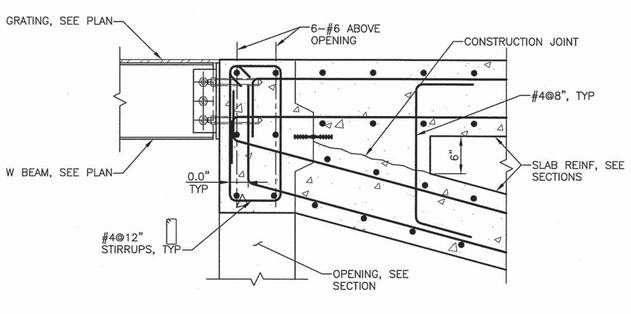


## DETAIL
1"=1'-0"
2
13S106

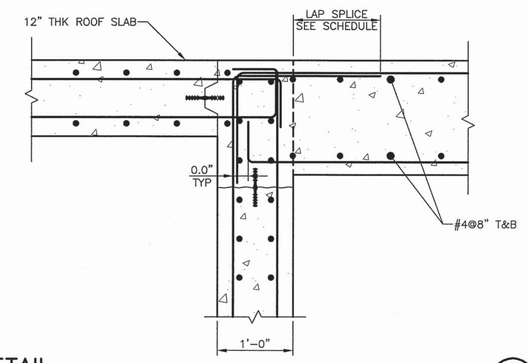


## DETAIL
1"=1'-0"
3
13S106

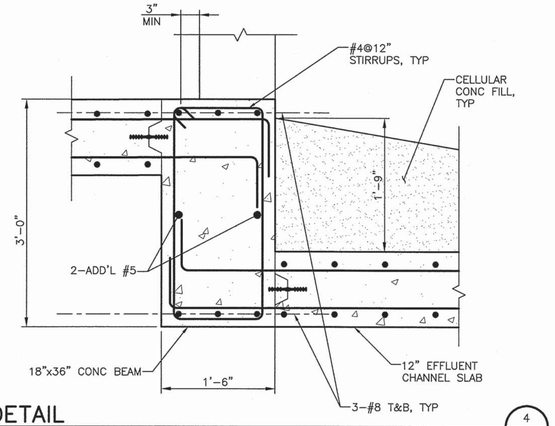


## DETAIL
1"=1'-0"
4
13S107

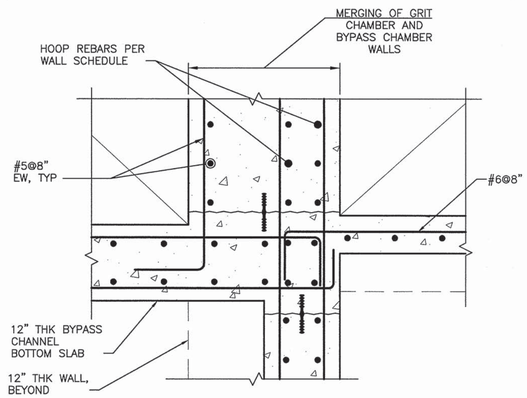


## DETAIL
1"=1'-0"
5
13S109

FILE: 215786-13S110.dwg
DATE: Jun 30, 2015-8:41:31am, jwebb

HDR Engineering, Inc.

| ISSUE | DATE | DESCRIPTION |
|---|---|---|
| A | JUNE 2015 | ISSUED FOR BID |

| | |
|---|---|
| PROJECT MANAGER | C. OLSON |
| | |
| DESIGNED | M. MOSTAFA |
| DESIGNED | |
| CHECKED | O. TAVANGAR |
| DRAWN | D. ELDREDGE |
| DATE | JUNE 30, 2015 |
| | |
| PROJECT NUMBER | 215786 |

REGISTERED PROFESSIONAL ENGINEER
MOHAMMADREZA MOSTAFA
NO. 78649
EXP. 09/30/15
CIVIL
STATE OF CALIFORNIA
06/30/15

CITY OF PINOLE CALIFORNIA 1903

PINOLE/HERCULES
WATER POLLUTION
CONTROL PLANT UPGRADE
CLIENT PN

**STRUCTURAL**

**GRIT REMOVAL SECTIONS - 5**

0 1" 2"

| | |
|---|---|
| FILENAME | 215786-13S110 |
| SCALE | AS NOTED |

SHEET
**13S110**

**NOTES:**

1. FOR GENERAL NOTES, SEE SHEET 00S01 AND 00S02.
2. FOR SPECIAL INSPECTION REQUIREMENTS, SEE 00S03 AND 00S04.
3. FOR TYPICAL CONCRETE DETAILS, SEE SHEETS 00S05 THRU 00S08.
4. FOR TYPICAL REINFORCING DETAILS, SEE 00S09.
5. FOR TYPICAL PILE DETAILS AND SCHEDULE, SEE SHEET 00S10.
6. "14P–X" DENOTES 14" SQUARE PRESTRESSED PRECAST CONCRETE PILES. SEE SHEET 00S10 FOR DETAILS AND SCHEDULE.
7. ALL COLUMNS, WALLS, PILES, AND PILECAPS ARE CENTERED ON GRID LINES, UNLESS NOTED OTHERWISE.

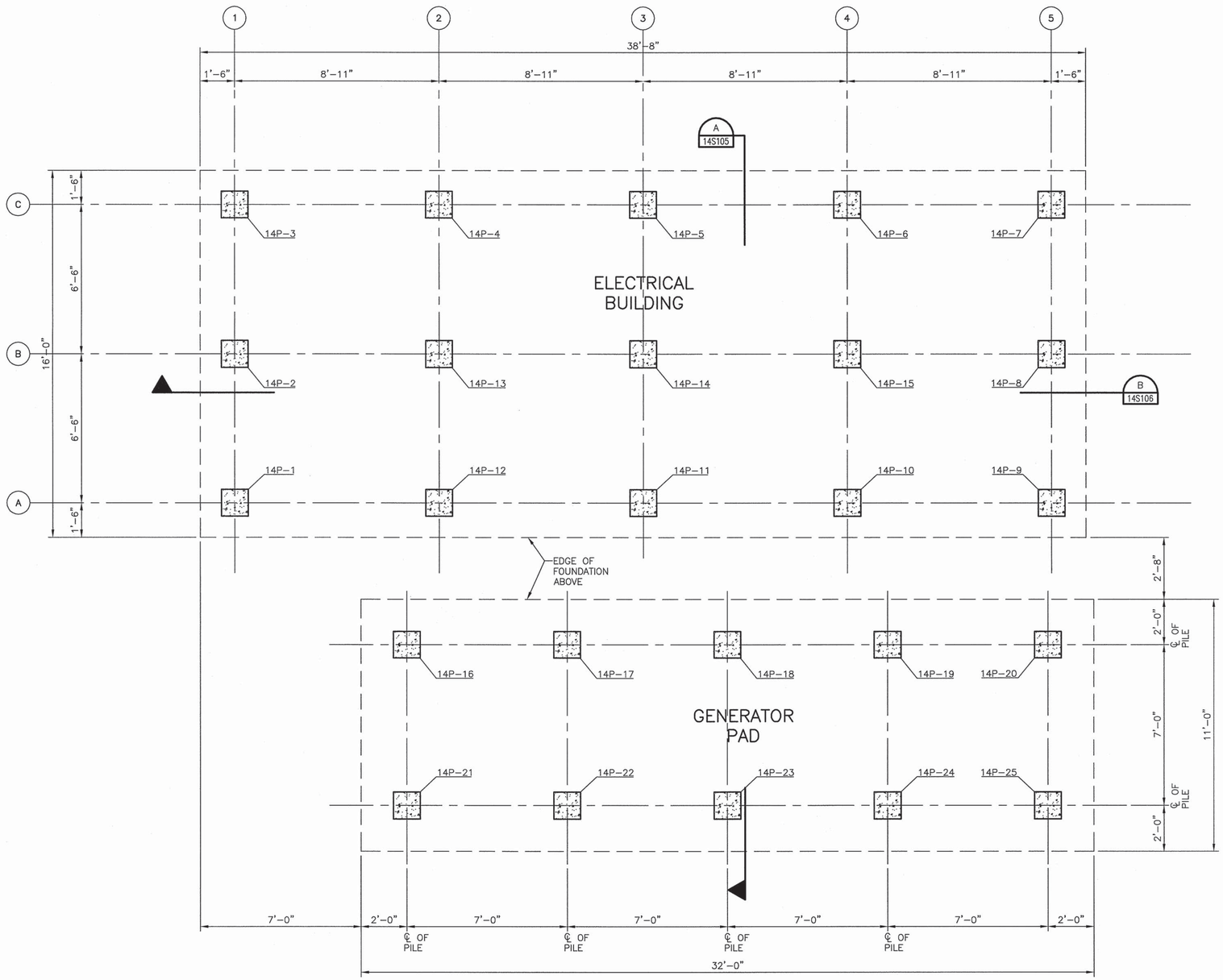


## PILE LAYOUT PLAN

SCALE: 3/8" = 1'–0"

TRUE NORTH

PROJECT NORTH

FILE: 215786–14S101.dwg
DATE: Jun 30, 2015–8:41:35am, jwebb

HDR Engineering, Inc.

| ISSUE | DATE | DESCRIPTION |
|---|---|---|
| A | JUNE 2015 | ISSUED FOR BID |

| | |
|---|---|
| PROJECT MANAGER | C. OLSON |
| | |
| DESIGNED | M. MOSTAFA |
| DESIGNED | |
| CHECKED | O. TAVANGAR |
| DRAWN | D. ELDREDGE |
| DATE | JUNE 30, 2015 |
| | |
| PROJECT NUMBER | 215786 |

REGISTERED PROFESSIONAL ENGINEER
MOHAMMADREZA MOSTAFA
NO. 78649
EXP. 09/30/15
CIVIL
STATE OF CALIFORNIA
06/30/15

CITY OF PINOLE CALIFORNIA 1903

PINOLE/HERCULES
WATER POLLUTION
CONTROL PLANT UPGRADE
CLIENT PN

**STRUCTURAL**

**ELECTRICAL BUILDING AND GENERATOR PILE LAYOUT PLAN**

0 1" 2"

| | |
|---|---|
| FILENAME | 215786–14S101 |
| SCALE | AS NOTED |

SHEET **14S101**

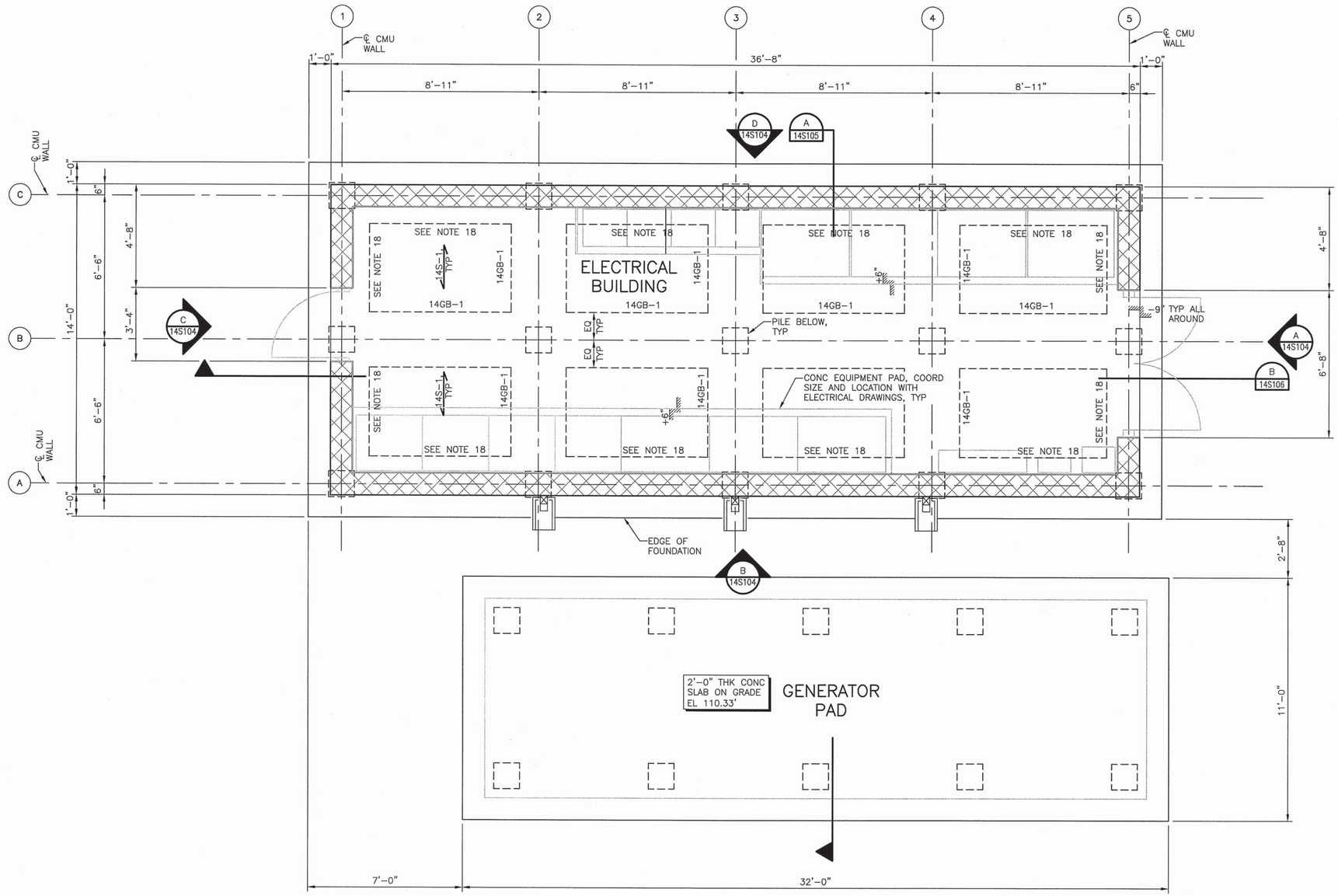


## FOUNDATION PLAN

SCALE: 3/8" = 1'–0"

**NOTES:**

1. FOR GENERAL NOTES, SEE SHEET 00S01 AND 00S02.
2. FOR SPECIAL INSPECTION REQUIREMENTS, SEE 00S03 AND 00S04.
3. FOR TYPICAL CONCRETE DETAILS, SEE SHEETS 00S05 THRU 00S08.
4. FOR TYPICAL REINFORCING DETAILS, SEE 00S09.
5. FOR TYPICAL CONCRETE BEAM, SLAB, AND WALL DETAILS AND SCHEDULES, SEE SHEETS 00S11 AND 00S12.
6. FOR TYPICAL METAL DECK DETAILS, SEE SHEET 00S17.
7. FOR TYPICAL CMU WALL DETASILS, SEE SHEET 00S13.
8. FOR TYPICAL STEEL DETAILS, SEE SHEET 00S14, 00S015 AND 00S16.
9. "14P–X" DENOTES 14" SQUARE PRESTRESSED PRECAST CONCRETE PILES. SEE SHEET 00S10 FOR DETAILS AND SCHEDULE.
10. "14S–X" DENOTES CONCRETE SLAB. SEE SHEET 00S05 AND 00S12 FOR DETAILS AND SCHEDULE.
11. "14GB–X" DENOTES CONCRETE GRADE BEAM. SEE SHEET 00S11 FOR DETAILS AND SCHEDULE.
12. "14W–X" DENOTES CONCRETE WALL. SEE SHEET 00S11 FOR WALL REINFORCING SCHEDULE.
13. DENOTES BRICK VENEER.
14. DENOTES CMU WALL.
15. DENOTES CHANGE IN TOP OF CONCRETE ELEVATION.
16. "CMJ" DENOTES CONCRETE MASONRY JOINT. ALL CMJs ARE SPECIFICALLY CALLED OUT ON DRAWINGS. DO NOT ADD OR ELIMINATE ANY WITHOUT WRITTEN APPROVAL OF THE ENGINEER OF RECORD.
17. ALL COLUMNS, WALLS, PILES, AND PILECAPS ARE CENTERED ON GRID LINES, UNLESS NOTED OTHERWISE.
18. THE REINFORCEMENT IS SHOWN ON 6/14S107.

TRUE NORTH

PROJECT NORTH

FILE: 215786–14S102.dwg
DATE: Jun 30, 2015–8:41:39am, jwebb

HDR Engineering, Inc.

| ISSUE | DATE | DESCRIPTION |
|---|---|---|
| A | JUNE 2015 | ISSUED FOR BID |

| | |
|---|---|
| PROJECT MANAGER | C. OLSON |
| DESIGNED | M. MOSTAFA |
| DESIGNED | |
| CHECKED | O. TAVANGAR |
| DRAWN | M. MOSTAFA |
| DATE | JUNE 30, 2015 |
| PROJECT NUMBER | 215786 |

REGISTERED PROFESSIONAL ENGINEER MOHAMMADREZA MOSTAFA NO. 78649 EXP. 09/30/15 CIVIL STATE OF CALIFORNIA 06/30/15

CITY OF PINOLE CALIFORNIA 1903

PINOLE/HERCULES
WATER POLLUTION
CONTROL PLANT UPGRADE
CLIENT PN

**STRUCTURAL**

**ELECTRICAL BUILDING AND GENERATOR FOUNDATION PLAN**

0 1" 2"

| | |
|---|---|
| FILENAME | 215786–14S102 |
| SCALE | AS NOTED |

SHEET **14S102**

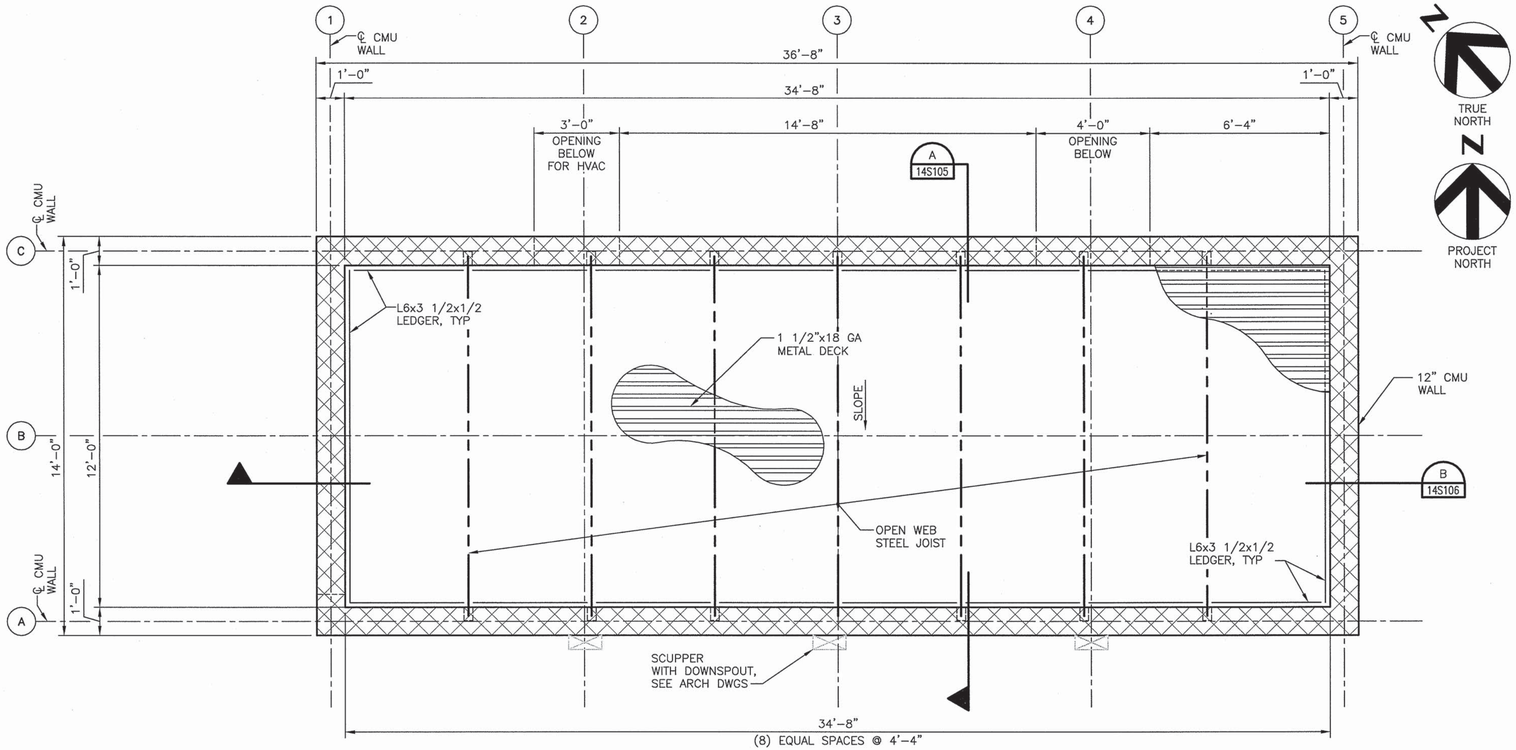


## ROOF FRAMING PLAN

SCALE: 3/8" = 1'-0"

## OPEN WEB JOIST DESIGN LOADS

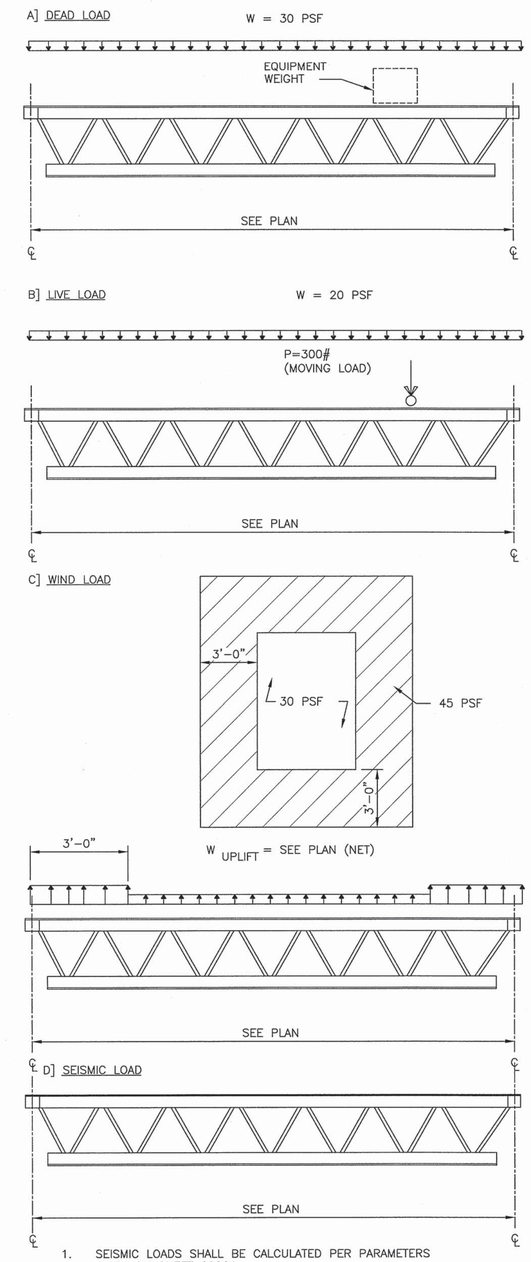


1. SEISMIC LOADS SHALL BE CALCULATED PER PARAMETERS GIVEN ON SHEET 00S01.
2. IN ADDITION (TO LOADS GIVEN IN NOTE 1), TRUSS MEMBERS SHALL BE DESIGNED TO ADDITIONAL AXIAL LOAD AS SHOWN:

## NOTES:

1. FOR GENERAL NOTES, SEE SHEET 00S01 AND 00S02.
2. FOR SPECIAL INSPECTION REQUIREMENTS, SEE 00S03 AND 00S04.
3. FOR TYPICAL METAL DECK DETAILS, SEE SHEET 00S17.
4. FOR TYPICAL CMU WALL DETAILS, SEE SHEET 00S13.
5. FOR TYPICAL STEEL DETAILS, SEE SHEET 00S14, 00S015 AND 00S16.
6. DENOTES CMU WALL.
7. "CMJ" DENOTES CONCRETE MASONRY JOINT. ALL CMJs ARE SPECIFICALLY CALLED OUT ON DRAWINGS. DO NOT ADD OR ELIMINATE ANY WITHOUT WRITTEN APPROVAL OF THE ENGINEER OF RECORD.
8. ALL COLUMNS, WALLS, PILES, AND PILECAPS ARE CENTERED ON GRID LINES, UNLESS NOTED OTHERWISE.
9. ALL LOADS SHOWN ARE SERVICE LOADS.
10. REFERENCE THE DESIGN LOADS OUTLINED ON SHEET 00S01 AND SPECIFICATION 05211 FOR ADDITIONAL DESIGN LOAD REQUIREMENTS.
11. TRUSSES SHALL BE DESIGNED TO TRANSFER THE LATERAL LOADS SHOWN TO THE CMU SHEAR WALLS INDICATED.
12. DESIGN ROOF TRUSSES WITH NO CAMBER.
13. LATERAL LOADS SHOWN APPLY IN BOTH DIRECTIONS, NON-SIMULTANIOUSLY.
14. TRUSS MFR TO PROVIDE LATERAL BRACING FOR COMPRESSIVE SEISMIC LOADS AS REQUIRED.
15. TRUSS DESIGN LOADS ARE ON THIS SHEET. ALSO SEE DEFERRED APPROVAL NOTE ON 0S001.

FILE: 215786-14S103.dwg
DATE: Jun 30, 2015-8:41:42am, jwebb

HDR
HDR Engineering, Inc.

| ISSUE | DATE | DESCRIPTION |
|---|---|---|
| A | JUNE 2015 | ISSUED FOR BID |

| | |
|---|---|
| PROJECT MANAGER | C. OLSON |
| DESIGNED | M. MOSTAFA |
| DESIGNED | |
| CHECKED | O. TAVANGAR |
| DRAWN | D. ELDREDGE |
| DATE | JUNE 30, 2015 |
| PROJECT NUMBER | 215786 |

REGISTERED PROFESSIONAL ENGINEER MOHAMMADREZA MOSTAFA NO. 78649 EXP. 09/30/15 CIVIL STATE OF CALIFORNIA 06/30/15

CITY OF PINOLE CALIFORNIA 1903

PINOLE/HERCULES WATER POLLUTION CONTROL PLANT UPGRADE CLIENT PN

**STRUCTURAL**

**ELECTRICAL BUILDING ROOF FRAMING PLAN**

0 1" 2"

| | |
|---|---|
| FILENAME | 215786-14S103 |
| SCALE | AS NOTED |

SHEET 14S103

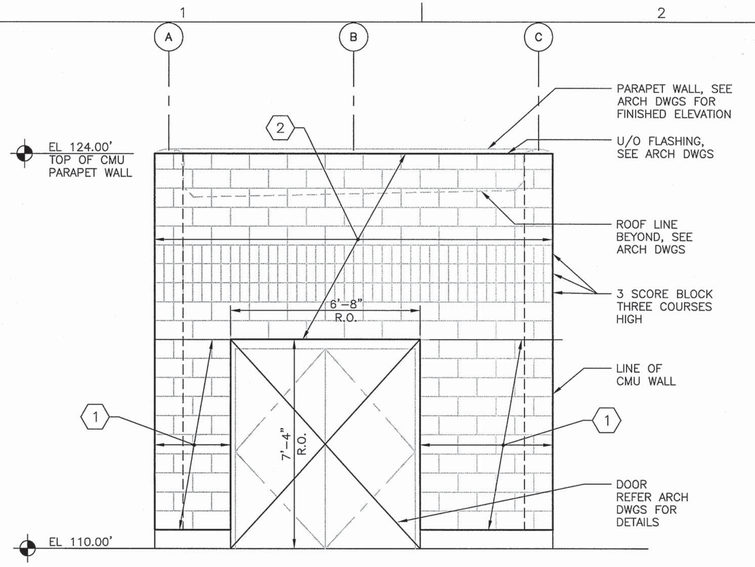


## EAST ELEVATION

SCALE: 3/8" = 1'-0"

A / 14S102

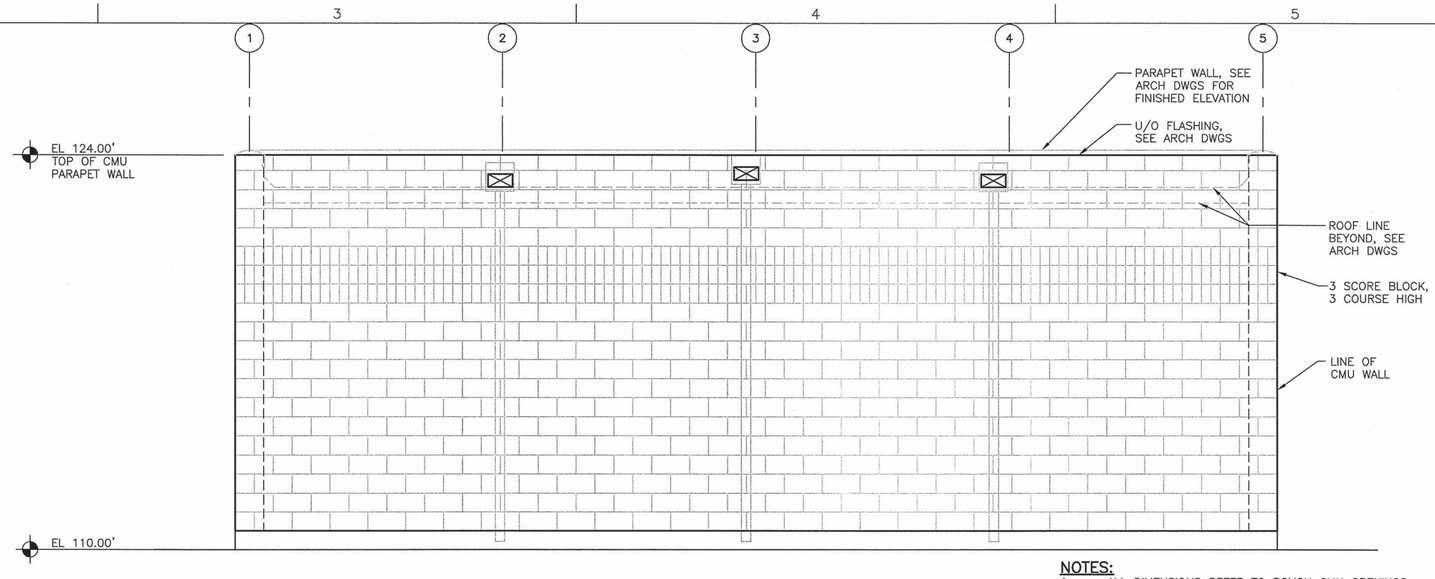


## SOUTH ELEVATION

SCALE: 3/8" = 1'-0"

B / 14S102

NOTES:

1. ALL DIMENSIONS REFER TO ROUGH CMU OPENINGS.
2. (1) REDUCE VERTICAL AND HORIZONTAL REINFORCEMENT SPACING TO 8"OC.
3. (2) HORIZONTAL REINFORCEMENT SPACING TO 16"OC.
4. REFER TO PLANS FOR NOTES NOT INDICATED ON THIS SHEET.
5. R.O. IS DENOTED AS "ROUGH OPENING".

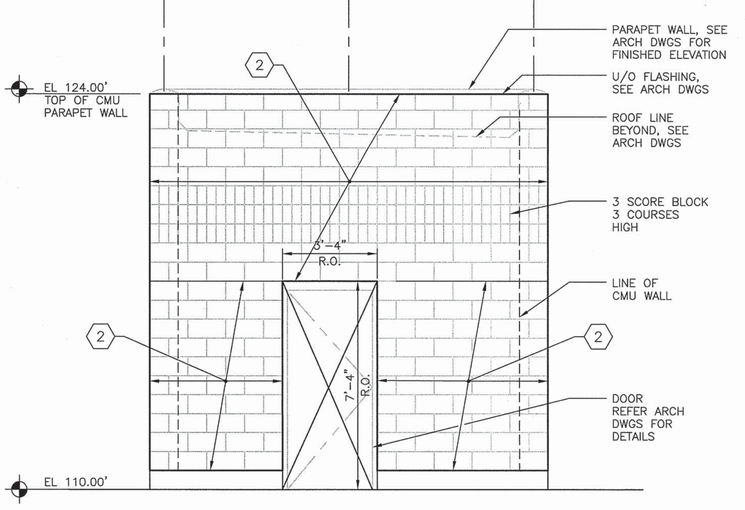


## WEST ELEVATION

SCALE: 3/8" = 1'-0"

C / 14S102

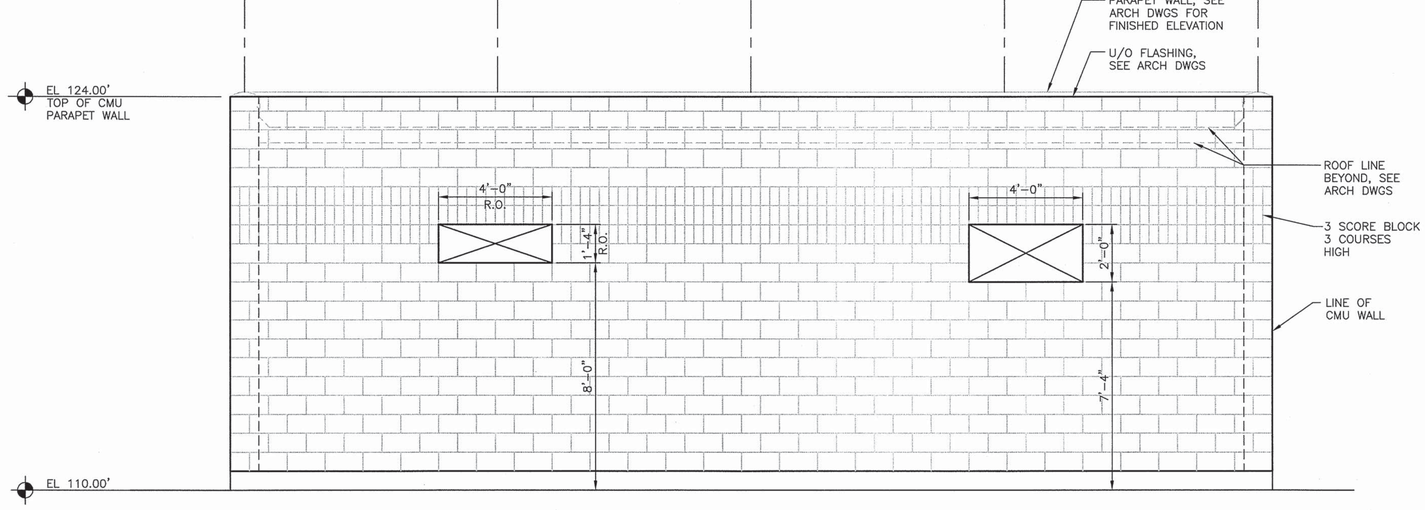


## NORTH ELEVATION

SCALE: 3/8" = 1'-0"

D / 14S102

FILE: 215786-14S104.dwg
DATE: Jun 30, 2015-8:41:46am, jwebb

HDR Engineering, Inc.

| ISSUE | DATE | DESCRIPTION |
|---|---|---|
| A | JUNE 2015 | ISSUED FOR BID |

| | |
|---|---|
| PROJECT MANAGER | C. OLSON |
| DESIGNED | M. MOSTAFA |
| DESIGNED | |
| CHECKED | O. TAVANGAR |
| DRAWN | D. ELDREDGE |
| DATE | JUNE 30, 2015 |
| PROJECT NUMBER | 215786 |

REGISTERED PROFESSIONAL ENGINEER
MOHAMMADREZA MOSTAFA
NO. 78649
EXP. 09/30/15
CIVIL
STATE OF CALIFORNIA
06/30/15

CITY OF PINOLE CALIFORNIA 1903

PINOLE/HERCULES
WATER POLLUTION
CONTROL PLANT UPGRADE
CLIENT PN

**STRUCTURAL**

**ELECTRICAL BUILDING STRUCTURAL ELEVATIONS**

0 1" 2"

| | |
|---|---|
| FILENAME | 215786-14S104 |
| SCALE | AS NOTED |

SHEET **14S104**

**NOTES:**

1. REFER TO PLANS FOR NOTES NOT INDICATED ON THIS SHEET.
2. PRIOR TO CONDUIT STUB UPS INSTALLATION. REVIEW GENERATOR SUBMITTAL FOR ACTUAL LOCATIONS OF ALL ELECTRICAL CONNECTIONS.

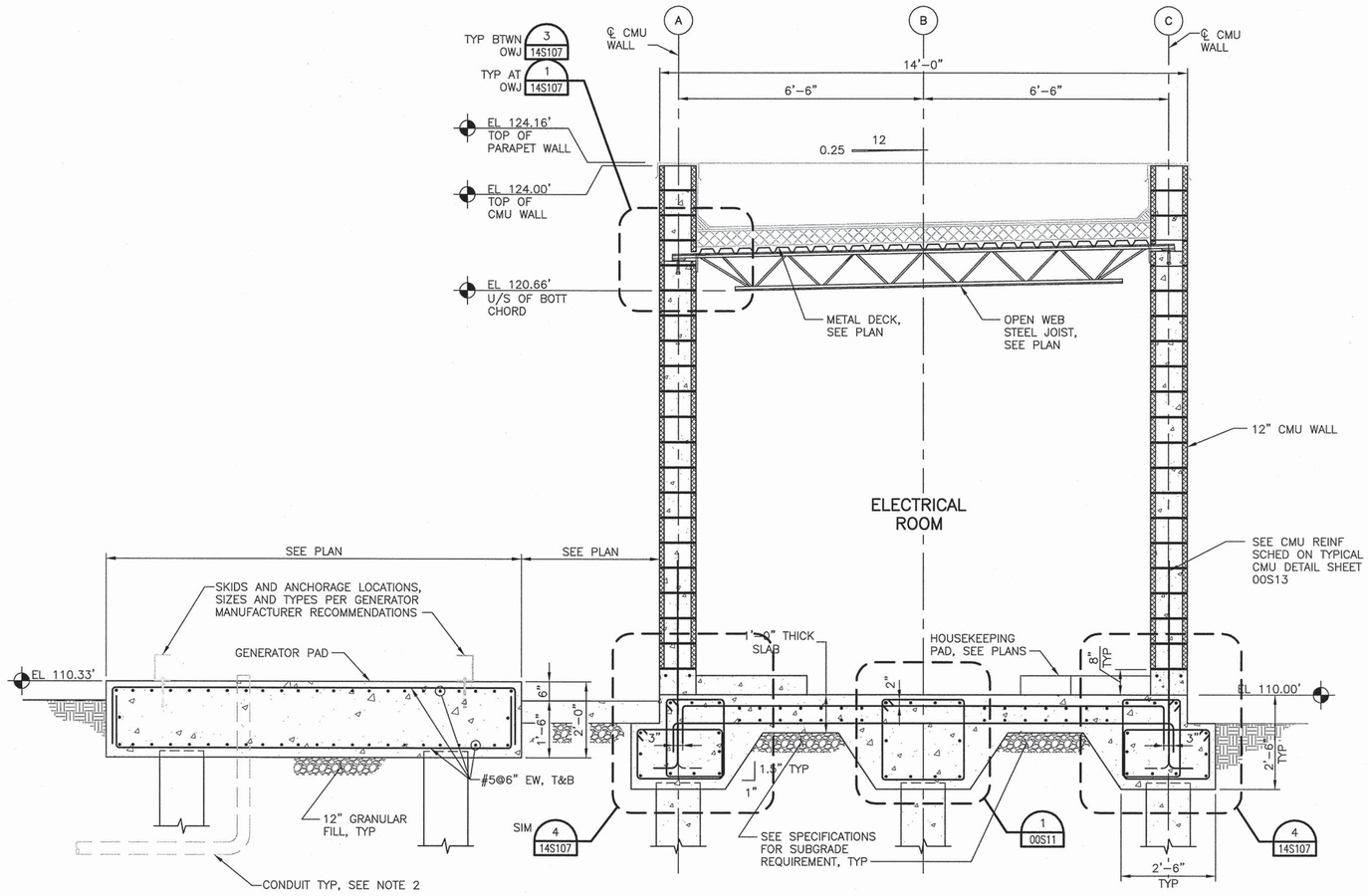


## SECTION

SCALE: 1/2" = 1'–0"

A 14S102

FILE: 215786–14S105.dwg
DATE: Jun 30, 2015–8:41:30am, jwebb

HDR Engineering, Inc.

| ISSUE | DATE | DESCRIPTION |
|---|---|---|
| A | JUNE 2015 | ISSUED FOR BID |

| | |
|---|---|
| PROJECT MANAGER | C. OLSON |
| DESIGNED | M. MOSTAFA |
| DESIGNED | |
| CHECKED | O. TAVANGAR |
| DRAWN | D. ELDREDGE |
| DATE | JUNE 30, 2015 |
| PROJECT NUMBER | 215786 |

REGISTERED PROFESSIONAL ENGINEER MOHAMMADREZA MOSTAFA NO. 78649 EXP. 09/30/15 CIVIL STATE OF CALIFORNIA 06/30/15

CITY OF PINOLE CALIFORNIA 1903

PINOLE/HERCULES
WATER POLLUTION
CONTROL PLANT UPGRADE
CLIENT PN

**STRUCTURAL**

**ELECTRICAL BUILDING AND GENERATOR - SECTIONS I**

0 1" 2"

| | |
|---|---|
| FILENAME | 215786–14S105 |
| SCALE | AS NOTED |

SHEET **14S105**

NOTES:
1. REFER TO PLANS FOR NOTES NOT INDICATED ON THIS SHEET.

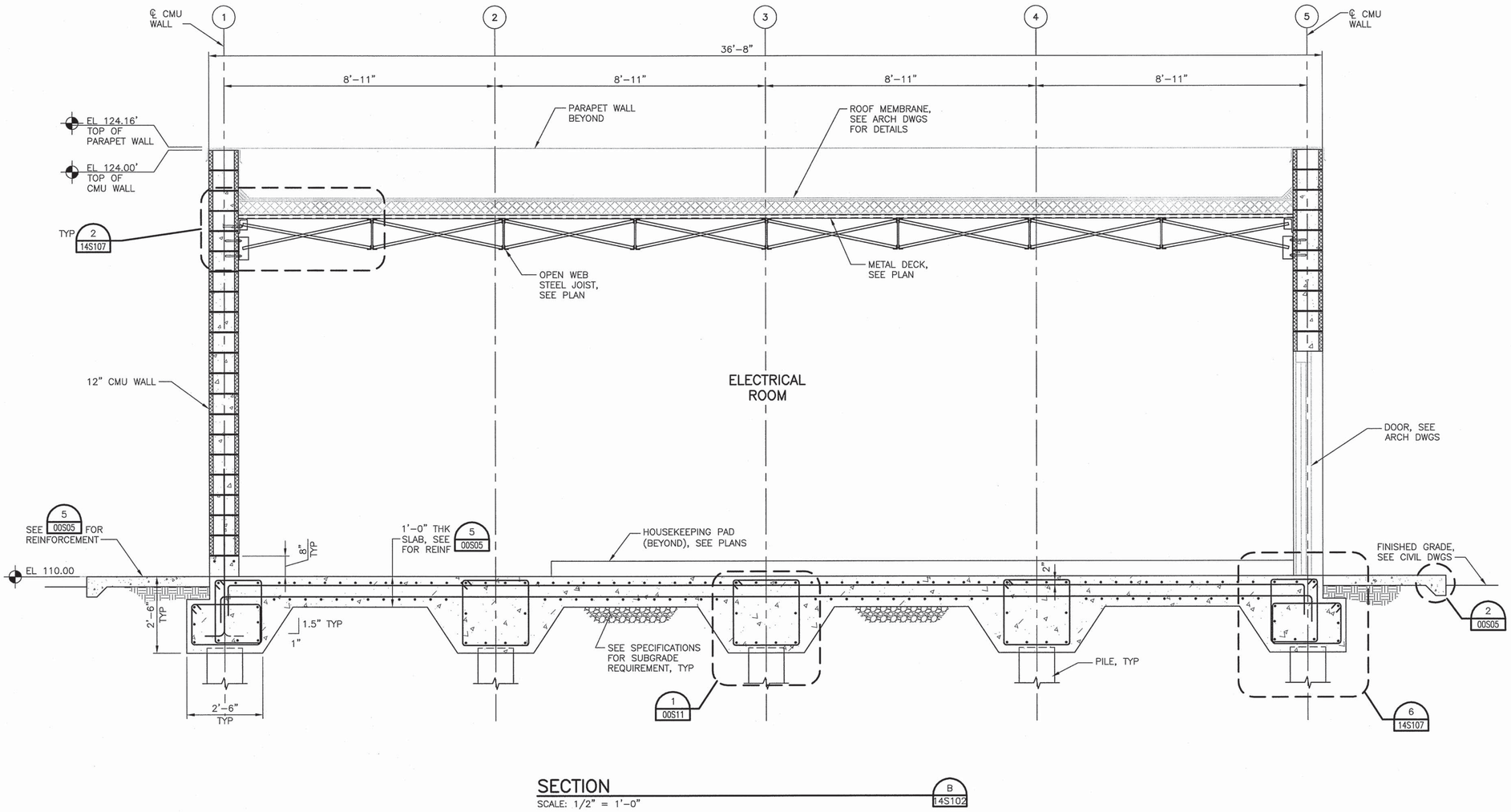


## SECTION
SCALE: 1/2" = 1'-0"

B 14S102

FILE: 215786-14S106.dwg
DATE: Jun 30, 2015-8:41:54am, jwebb

HDR Engineering, Inc.

| ISSUE | DATE | DESCRIPTION |
|---|---|---|
| A | JUNE 2015 | ISSUED FOR BID |

| | |
|---|---|
| PROJECT MANAGER | C. OLSON |
| | |
| DESIGNED | M. MOSTAFA |
| DESIGNED | |
| CHECKED | O. TAVANGAR |
| DRAWN | D. ELDREDGE |
| DATE | JUNE 30, 2015 |
| | |
| PROJECT NUMBER | 215786 |

REGISTERED PROFESSIONAL ENGINEER MOHAMMADREZA MOSTAFA NO. 78649 EXP. 09/30/15 CIVIL STATE OF CALIFORNIA 06/30/15

CITY OF PINOLE CALIFORNIA 1903

PINOLE/HERCULES
WATER POLLUTION
CONTROL PLANT UPGRADE
CLIENT PN

**STRUCTURAL**

**ELECTRICAL BUILDING AND GENERATOR - SECTIONS II**

0 1" 2"

| | |
|---|---|
| FILENAME | 215786-14S106 |
| SCALE | AS NOTED |

SHEET 14S106

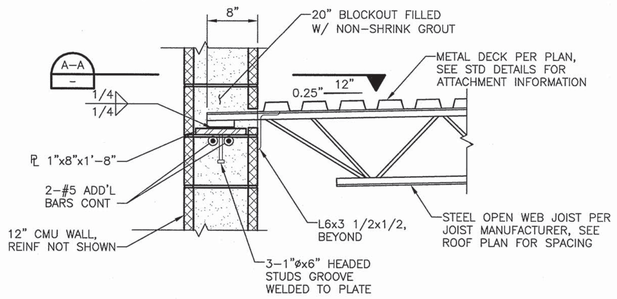


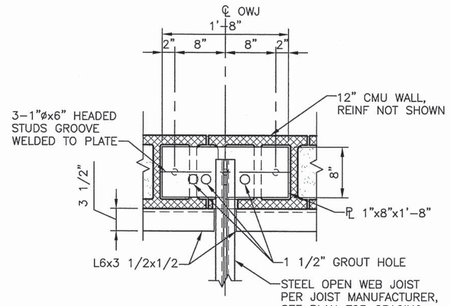


SECTION A–A

## OPEN WEB JOIST TO 12" CMU WALL CONNECTION

SCALE: 1"=1'-0"

1 / 14S105

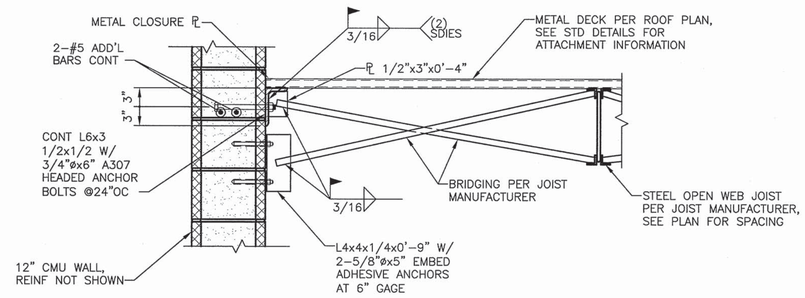


## OPEN WEB JOIST TO 12" CMU WALL CONNECTION

SCALE: 1"=1'-0"

2 / 14S106

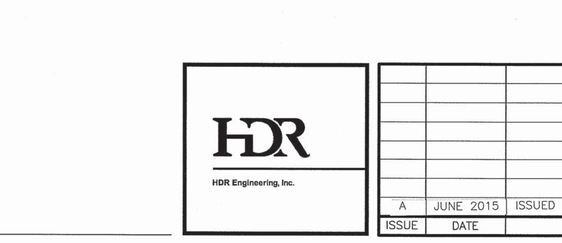


## METAL DECK TO WALL CONN (BTWN OWJ)

SCALE: 1"=1'-0"

3 / 14S105




## DETAIL GRADE BEAM

SCALE: 1"=1'-0"

4 / 14S105

FILE: 215786-14S107.dwg
DATE: Jun 30, 2015-8:41:59am, jwebb

HDR Engineering, Inc.

| ISSUE | DATE | DESCRIPTION |
|---|---|---|
| A | JUNE 2015 | ISSUED FOR BID |

| | |
|---|---|
| PROJECT MANAGER | C. OLSON |
| | |
| DESIGNED | M. MOSTAFA |
| DESIGNED | |
| CHECKED | C. OLSON |
| DRAWN | D. ELDREDGE |
| DATE | JUNE 30, 2015 |
| | |
| PROJECT NUMBER | 215786 |

REGISTERED PROFESSIONAL ENGINEER MORTAZAREZA MOSTAFA NO. 78649 EXP. 09/30/15 CIVIL STATE OF CALIFORNIA
06/30/15

CITY OF PINOLE CALIFORNIA 1903

PINOLE/HERCULES
WATER POLLUTION
CONTROL PLANT UPGRADE
CLIENT PN

**STRUCTURAL**

**ELECTRICAL BUILDING DETAILS**

0 1" 2"

| | |
|---|---|
| FILENAME | 215786-14S107 |
| SCALE | AS NOTED |

SHEET **14S107**

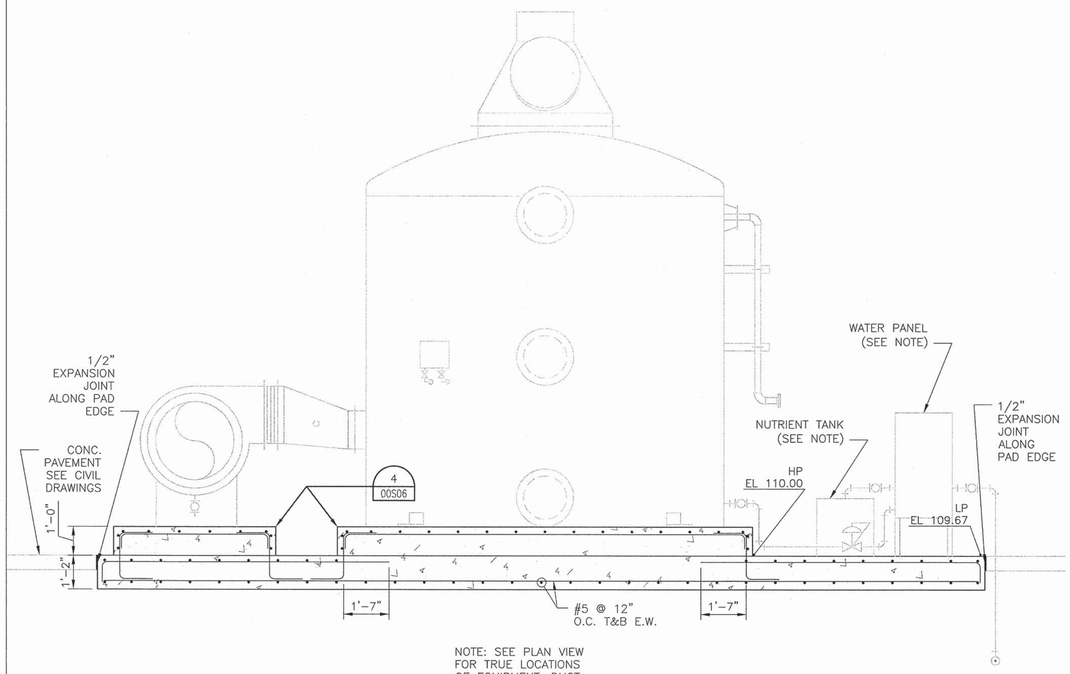


SECTION
3/8" = 1'-0"

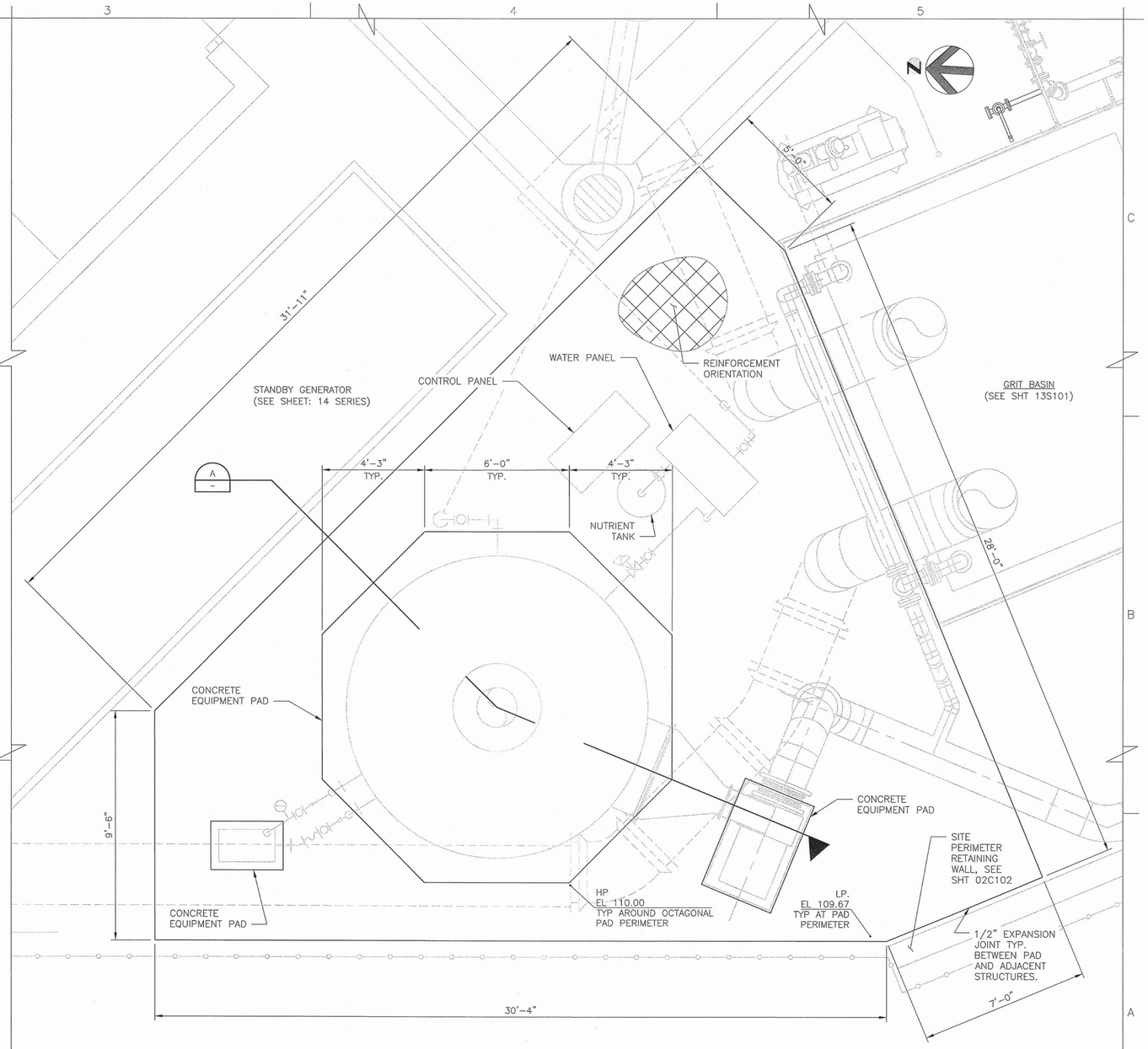


ODOR CONTROL PAD PLAN
3/8" = 1'-0"

FILE: 15S101.dwg
DATE: Jun 29, 2015-4:59:28pm, slori

HDR
HDR Engineering, Inc.

| ISSUE | DATE | DESCRIPTION |
|---|---|---|
| A | JUNE 2015 | ISSUED FOR BID |

| | |
|---|---|
| PROJECT MANAGER | C. OLSON |
| | |
| DESIGNED | Z.LI |
| DESIGNED | |
| CHECKED | C. OLSON |
| DRAWN | S.LARI |
| DATE | JUNE 30, 2015 |
| | |
| PROJECT NUMBER | 215786 |

REGISTERED PROFESSIONAL ENGINEER
ZHEN LI
No. 74809
EXP. 12/31/15
6/30/2015
CIVIL
STATE OF CALIFORNIA

CITY OF PINOLE CALIFORNIA 1903

PINOLE/HERCULES
WATER POLLUTION
CONTROL PLANT UPGRADE
CLIENT PN

**STRUCTURAL**
**HEADWORKS**
**ODOR CONTROL PAD**
**PLAN AND SECTION**

0 1" 2"

| | |
|---|---|
| FILENAME | 15S101 |
| SCALE | 1/4"=1'-0" |

SHEET
**15S101**

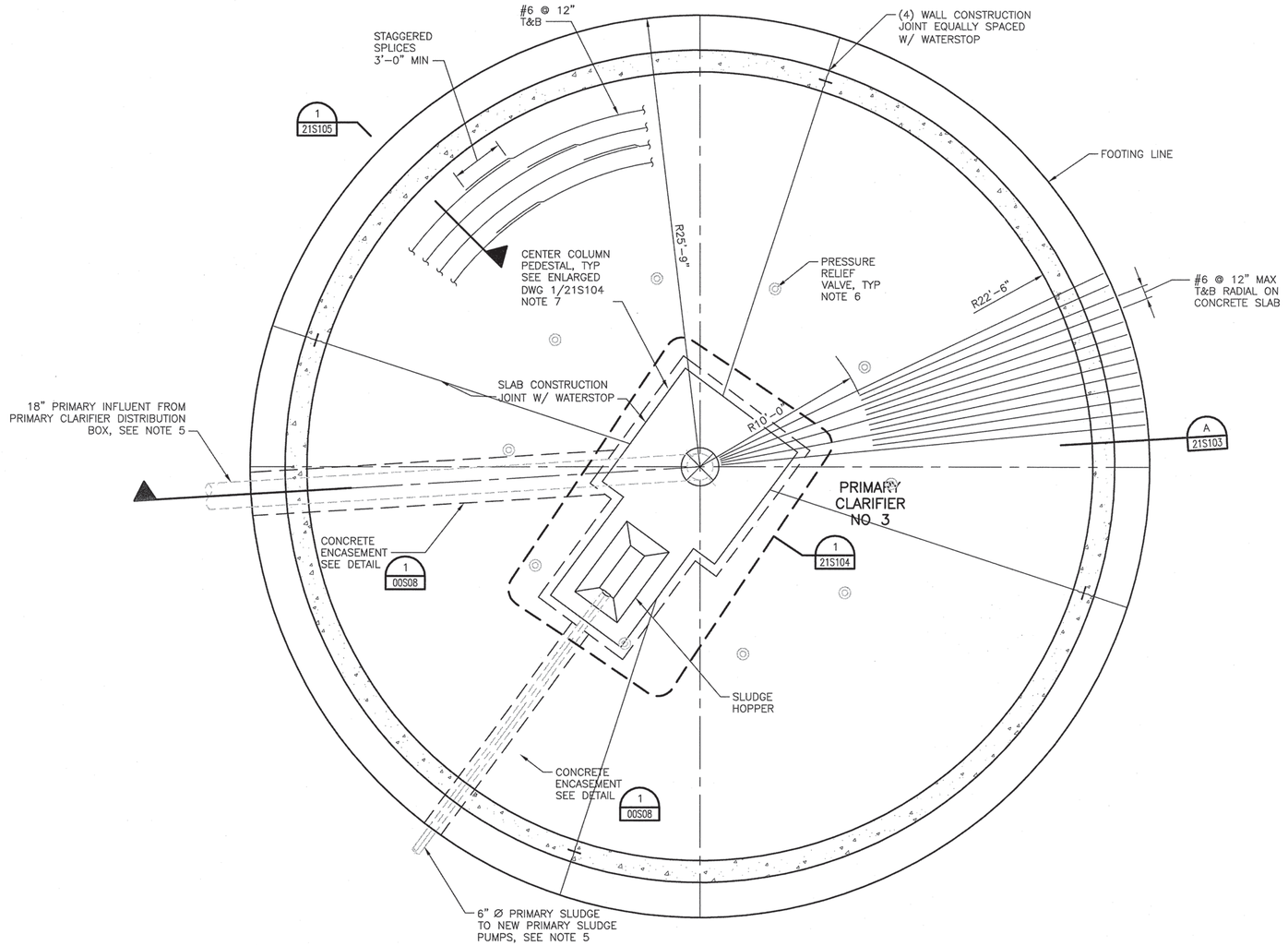


## NOTES:

1. FOR GENERAL NOTES, SEE SHEET 00S01 AND 00S02.
2. FOR SPECIAL INSPECTION REQUIREMENTS, SEE 00S03 AND 00S04.
3. FOR TYPICAL CONCRETE DETAILS, SEE SHEETS 00S05 THRU 00S08.
4. FOR TYPICAL REINFORCING DETAILS, SEE 00S09.
5. COORDINATE PIPING LOCATION, ORIENTATION, ELEVATIONS, AND CONCRETE PENETRATIONS WITH PROCESS/MECHANICAL DRAWINGS.
6. REFER TO PROCESS DRAWINGS FOR LOCATIONS AND AMOUNT OF PRESSURE RELIEF VALVES.
7. PEDESTAL SIZE AND REINFORCEMENT ARE BASED ON MECHANISM INFORMATION AT PRE-DESIGN STAGE. CONSTRUCTOR SHALL PROVIDE ALL DESIGN LOADS AT PEDESTAL BASE FOR ENGINEER OF RECORD TO VERIFY PEDESTAL DESIGN BEFORE CONSTRUCTION.

## PRIMARY CLARIFIER-FOUNDATION PLAN

SCALE: 1/4 = 1'-0"

TRUE NORTH

PROJECT NORTH

FILE: 215786-21S101.dwg
DATE: Jun 29, 2015 - 3:55:51pm, jwebb

HDR Engineering, Inc.

| ISSUE | DATE | DESCRIPTION |
|---|---|---|
| A | JUNE 2015 | ISSUED FOR BID |

| | |
|---|---|
| PROJECT MANAGER | C. OLSON |
| DESIGNED | Z. LI |
| DESIGNED | |
| CHECKED | O. TAVANGAR |
| DRAWN | D. ELDREDGE |
| DATE | JUNE 30, 2015 |
| PROJECT NUMBER | 215786 |

REGISTERED PROFESSIONAL ENGINEER — ZHEN LI — NO. 74809 — EXP. 12/31/15 — 6/30/2015 — CIVIL — STATE OF CALIFORNIA

CITY OF PINOLE CALIFORNIA 1903

PINOLE/HERCULES
WATER POLLUTION
CONTROL PLANT UPGRADE
CLIENT PN

**STRUCTURAL**

**PRIMARY CLARIFIER NO 3 FOUNDATION PLAN**

0 1" 2"

| | |
|---|---|
| FILENAME | 215786-21S101 |
| SCALE | AS NOTED |

SHEET **21S101**

## NOTES:

1. FOR GENERAL NOTES, SEE SHEET 00S01 AND 00S02.
2. FOR SPECIAL INSPECTION REQUIREMENTS, SEE 00S03 AND 00S04.
3. FOR TYPICAL CONCRETE DETAILS, SEE SHEETS 00S05 THRU 00S08.
4. FOR TYPICAL REINFORCING DETAILS, SEE 00S09.
5. FOR TYPICAL GRATING DETAIL, SEE SHEET 00S14.
6. FOR TYPICAL RAILING DETAILS, SEE SHEET 00S15.
7. DENOTES CHANGE IN TOP OF CONCRETE ELEVATION.
8. X.XX' DENOTES POINT ELEVATION.
9. COORDINATE PIPING AND EQUIPMENT LOCATIONS, ORIENTATION, ELEVATIONS, AND CONCRETE PENETRATIONS WITH PROCESS/MECHANICAL DRAWINGS.
10. VERIFY AND COORDINATE LANDING SIZE WITH DIMENSIONS OF SUPPLIED EQUIPMENT.

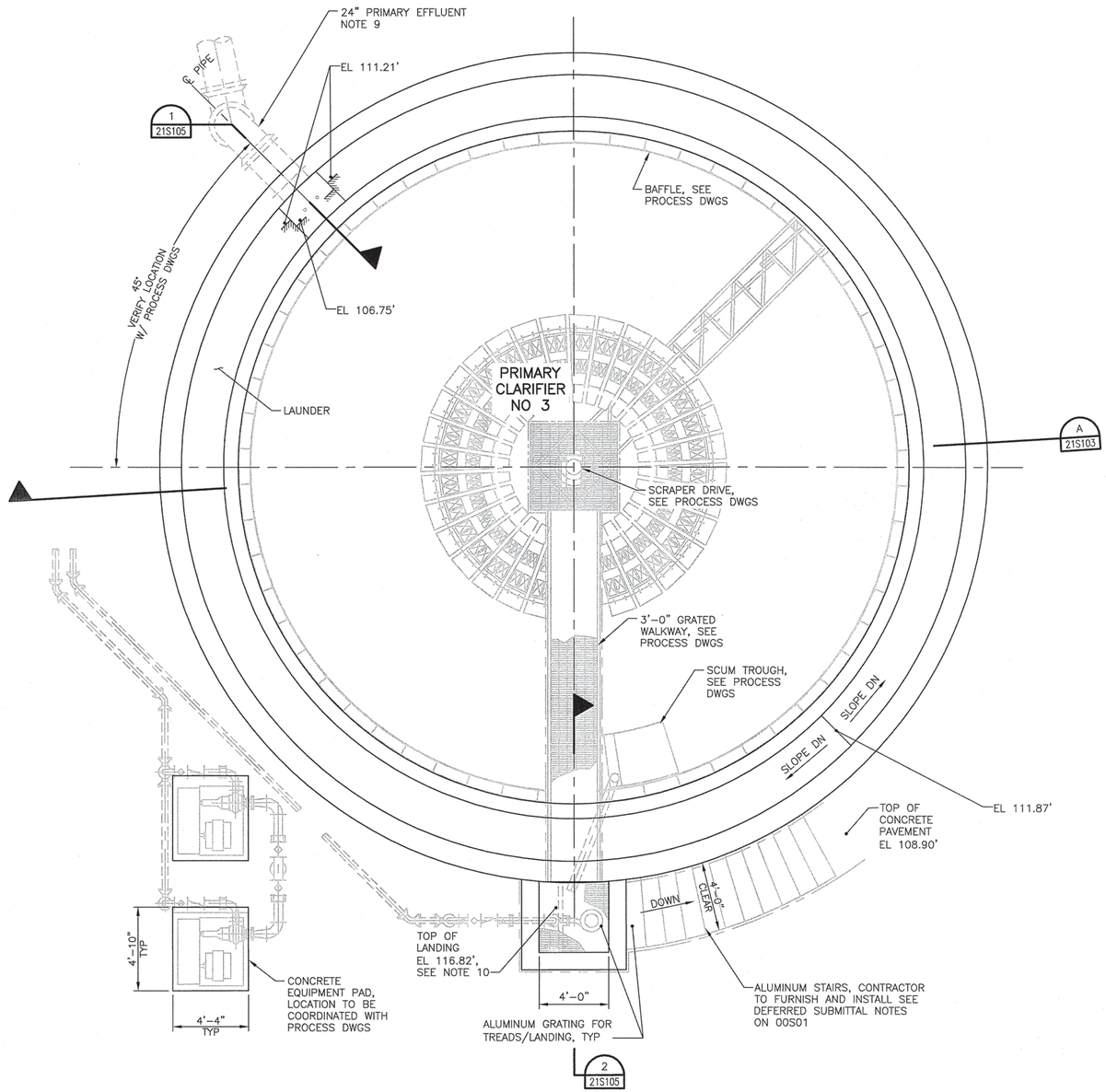


## PRIMARY CLARIFIER–TOP PLAN

SCALE: 1/4 = 1'–0"

FILE: 215786–21S102.dwg
DATE: Jun 29, 2015–3:55:55pm, jwebb

HDR Engineering, Inc.

| ISSUE | DATE | DESCRIPTION |
|---|---|---|
| A | JUNE 2015 | ISSUED FOR BID |

| | |
|---|---|
| PROJECT MANAGER | C. OLSON |
| DESIGNED | Z. LI |
| DESIGNED | |
| CHECKED | O. TAVANGAR |
| DRAWN | D. ELDREDGE |
| DATE | JUNE 30, 2015 |
| PROJECT NUMBER | 215786 |

REGISTERED PROFESSIONAL ENGINEER — ZHEN LI — NO. 74809 — EXP. 12/31/15 — CIVIL — STATE OF CALIFORNIA

CITY OF PINOLE CALIFORNIA — 1903

PINOLE/HERCULES WATER POLLUTION CONTROL PLANT UPGRADE CLIENT PN

**STRUCTURAL**

**PRIMARY CLARIFIER NO 3 TOP PLAN**

0 1" 2"

| | |
|---|---|
| FILENAME | 215786–21S102 |
| SCALE | AS NOTED |

SHEET **21S102**

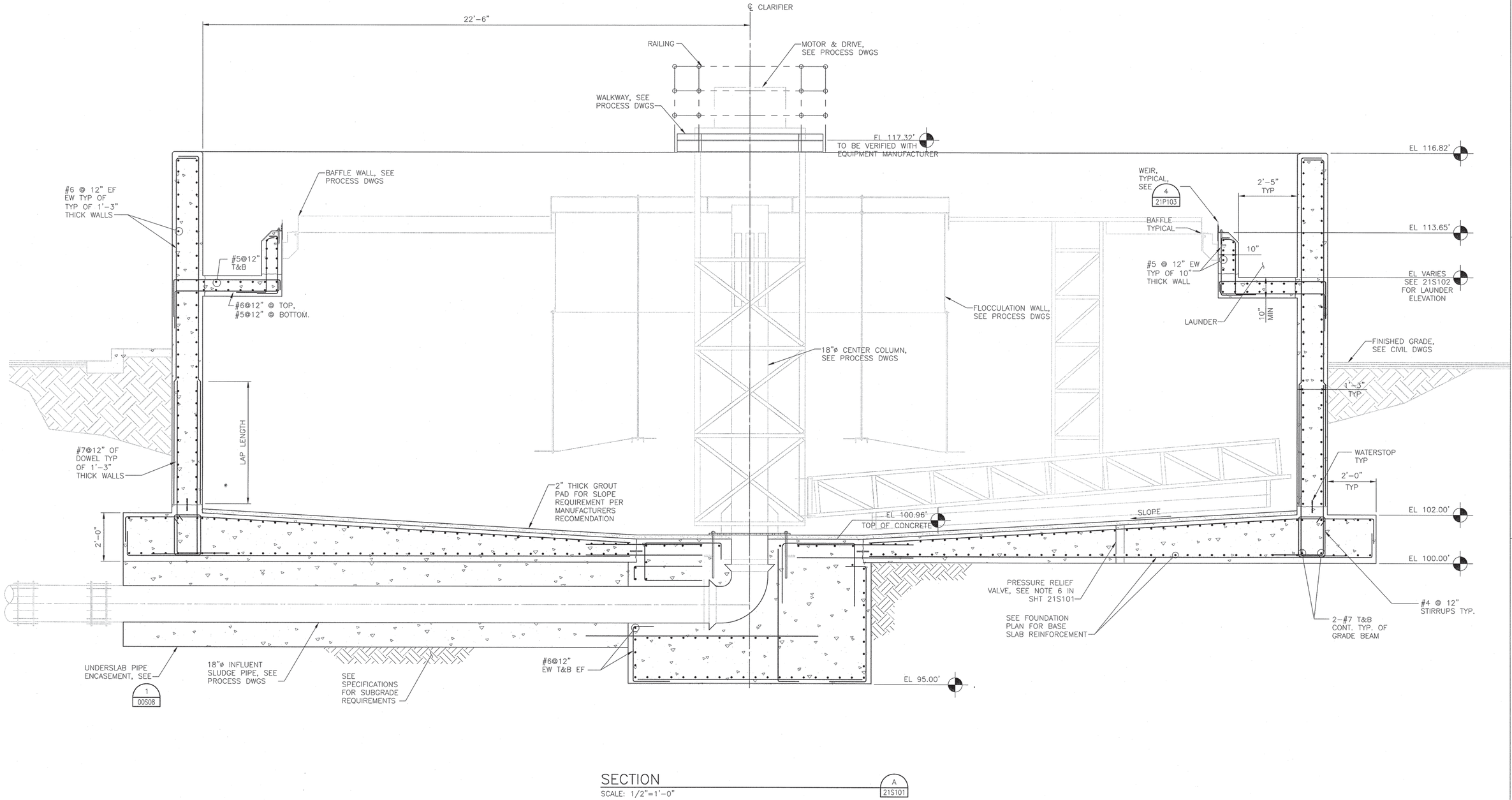


## SECTION

SCALE: 1/2"=1'-0"

A 21S101

FILE: 215786-21S103.dwg
DATE: Jun 29, 2015-4:33:55pm, alori

HDR Engineering, Inc.

| ISSUE | DATE | DESCRIPTION |
|---|---|---|
| A | JUNE 2015 | ISSUED FOR BID |

| | |
|---|---|
| PROJECT MANAGER | C. OLSON |
| DESIGNED | Z. LI |
| DESIGNED | |
| CHECKED | O. TAVANGAR |
| DRAWN | D.ELDREDGE |
| DATE | JUNE 30, 2015 |
| PROJECT NUMBER | 215786 |

REGISTERED PROFESSIONAL ENGINEER — ZHEN LI — NO. 74809 — EXP. 12/31/15 — 6/30/2015 — CIVIL — STATE OF CALIFORNIA

CITY OF PINOLE CALIFORNIA — 1903

PINOLE/HERCULES WATER POLLUTION CONTROL PLANT UPGRADE CLIENT PN

**STRUCTURAL**

**PRIMARY CLARIFIER NO 3 SECTION**

0 1" 2"

| | |
|---|---|
| FILENAME | 215786-21S103 |
| SCALE | AS NOTED |

SHEET **21S103**

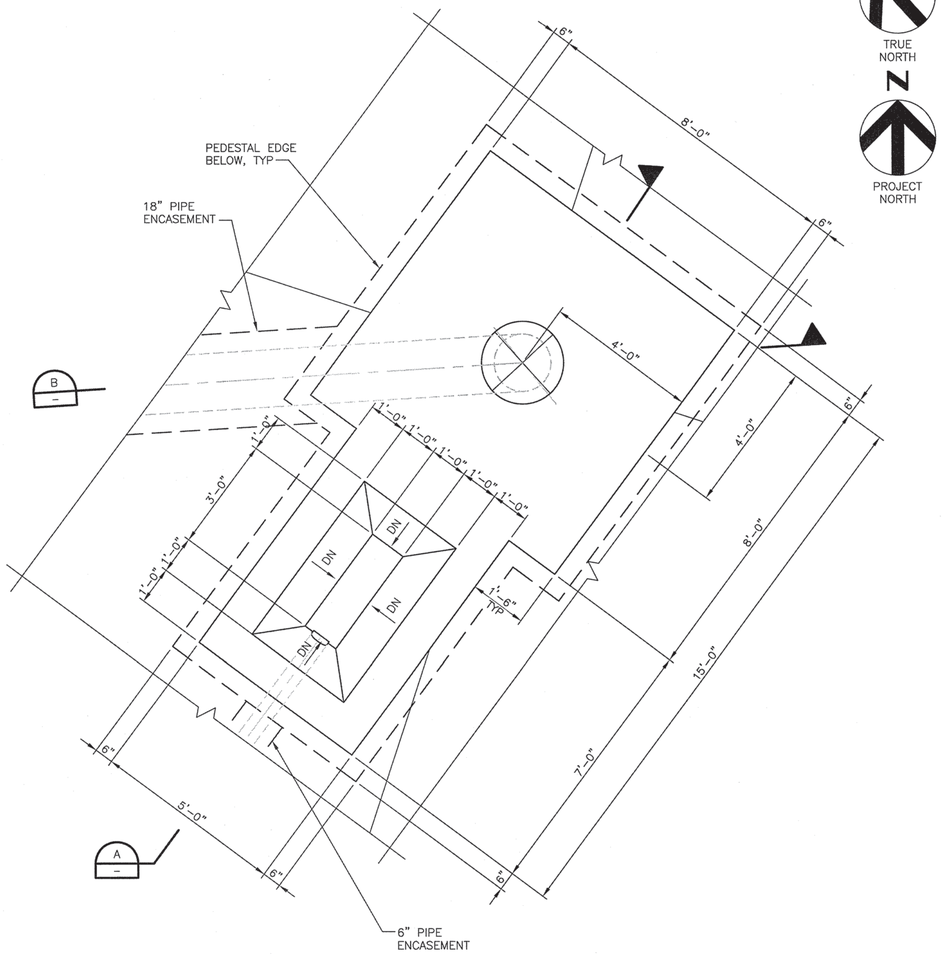


## ENLARGED PLAN

1/2" = 1'-0"

1 / 21S101

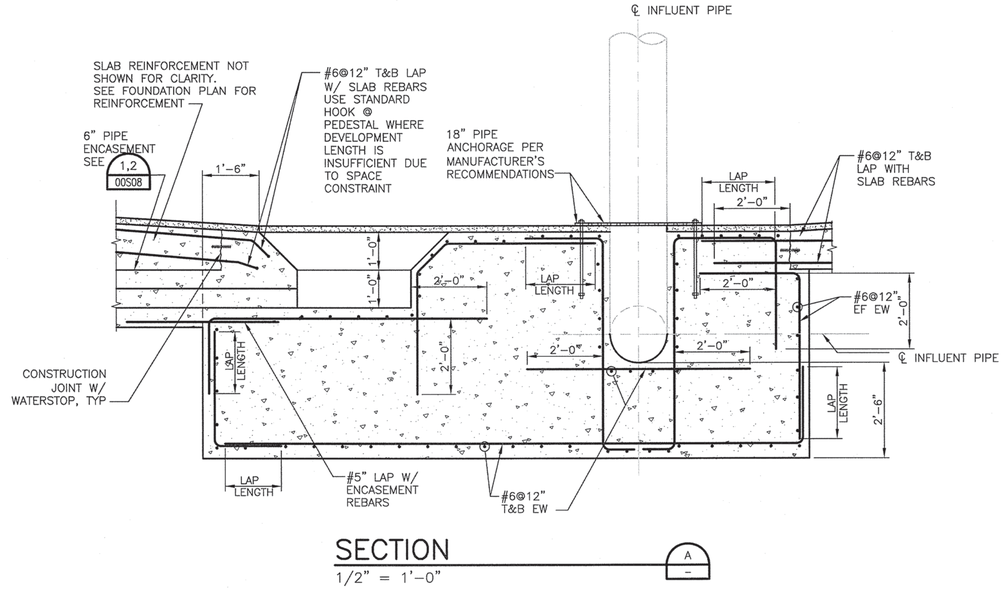


## SECTION

1/2" = 1'-0"

A

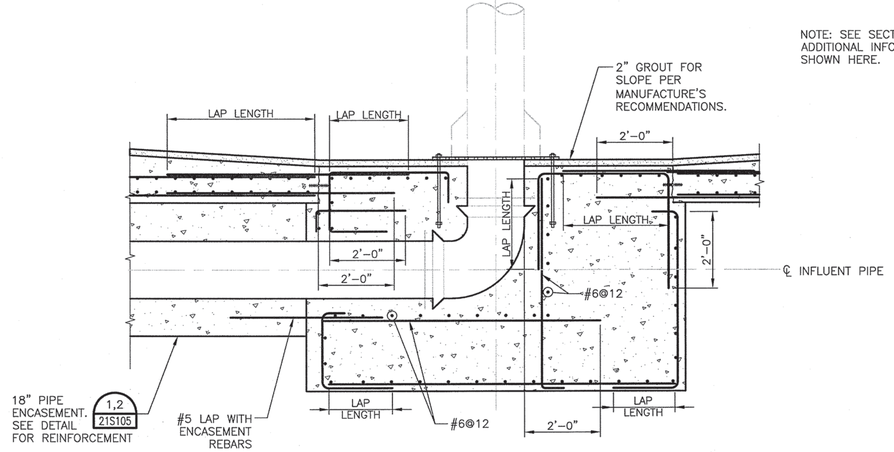


## SECTION

1/2" = 1'-0"

B

FILE: 215786-21S104.dwg
DATE: Jun 29, 2015 - 8:36:18pm, zhli

HDR Engineering, Inc.

| ISSUE | DATE | DESCRIPTION |
|---|---|---|
| A | JUNE 2015 | ISSUED FOR BID |

| | |
|---|---|
| PROJECT MANAGER | C. OLSON |
| DESIGNED | Z. LI |
| DESIGNED | |
| CHECKED | C. OLSON |
| DRAWN | D.ELDREDGE |
| DATE | JUNE 30, 2015 |
| PROJECT NUMBER | 215786 |

REGISTERED PROFESSIONAL ENGINEER — ZHEN LI — NO. 74809 — EXP. 12/31/15 — 6/30/2015 — CIVIL — STATE OF CALIFORNIA

CITY OF PINOLE CALIFORNIA — 1903

PINOLE/HERCULES WATER POLLUTION CONTROL PLANT UPGRADE
CLIENT PN

**STRUCTURAL**

**PRIMARY CLARIFIER NO 3 ENLARGED PLAN AND DETAILS**

0 1" 2"

| | |
|---|---|
| FILENAME | 215786-21S104 |
| SCALE | AS NOTED |

SHEET **21S104**

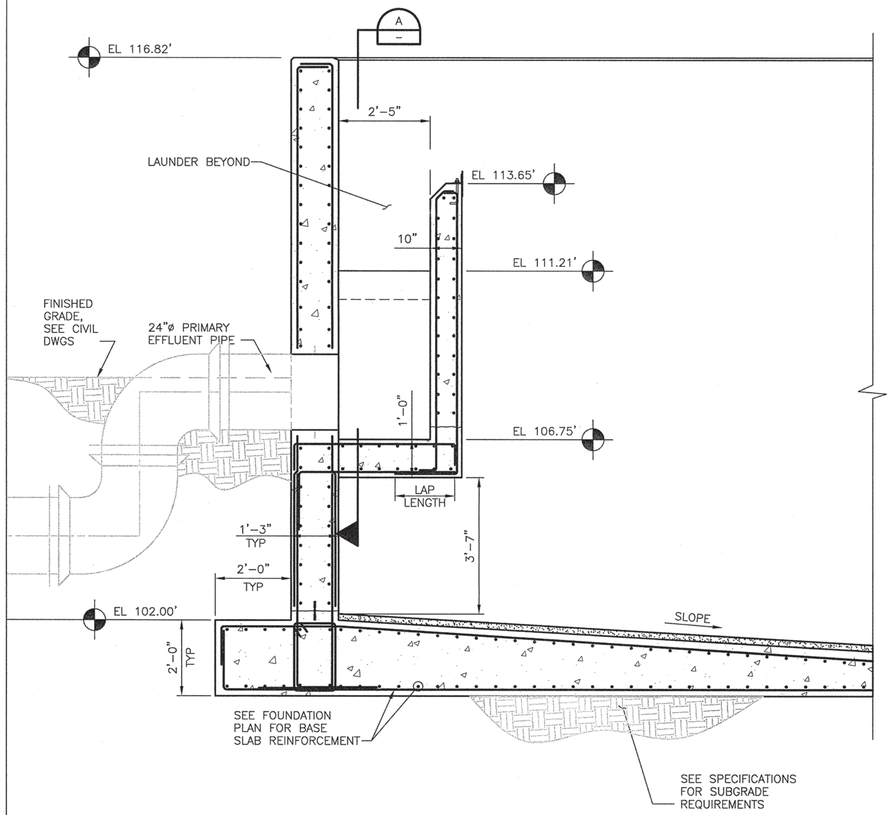


## DETAIL

SCALE: 1/2"=1'-0"

1 / 21S101

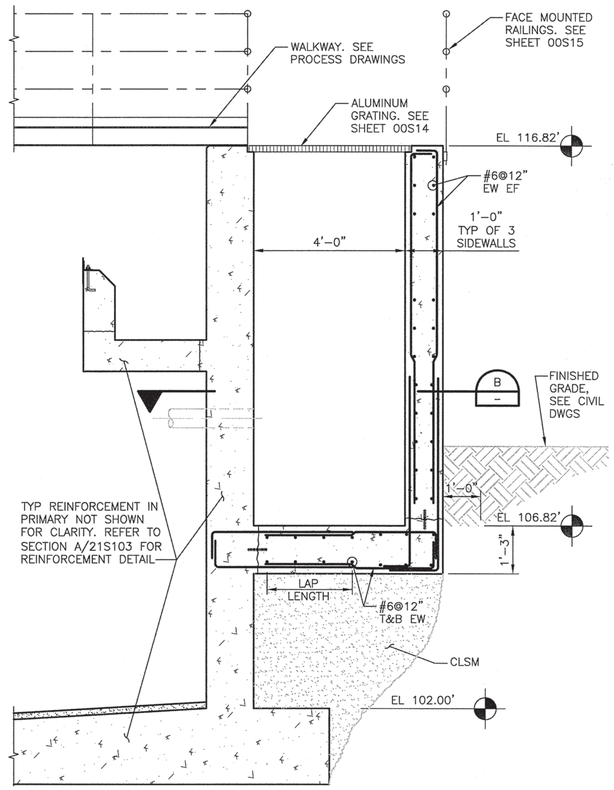


## SECTION

SCALE: 1/2"=1'-0"

2 / 21S102

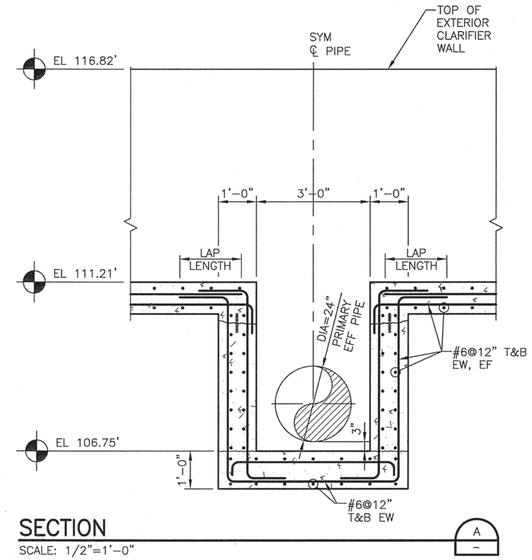


## SECTION

SCALE: 1/2"=1'-0"

B / –

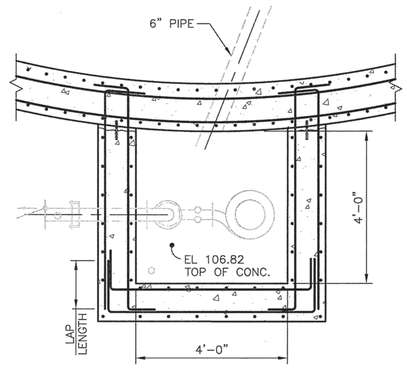


FILE: 215786-21S105.dwg
DATE: Jun 29, 2015-8:04:47pm, zhli

HDR Engineering, Inc.

| ISSUE | DATE | DESCRIPTION |
|---|---|---|
| A | JUNE 2015 | ISSUED FOR BID |

| | |
|---|---|
| PROJECT MANAGER | C. OLSON |
| | |
| DESIGNED | Z. LI |
| DESIGNED | |
| CHECKED | O. TAVANGAR |
| DRAWN | D.ELDREDGE |
| DATE | JUNE 30, 2015 |
| | |
| PROJECT NUMBER | 215786 |

REGISTERED PROFESSIONAL ENGINEER
ZHEN LI
NO. 74809
EXP. 12/31/15
CIVIL
STATE OF CALIFORNIA

CITY OF PINOLE CALIFORNIA 1903

PINOLE/HERCULES
WATER POLLUTION
CONTROL PLANT UPGRADE
CLIENT PN

**STRUCTURAL**

**PRIMARY CLARIFIER NO 3 DETAILS**

0 1" 2"

| | |
|---|---|
| FILENAME | 215786-21S105 |
| SCALE | AS NOTED |

SHEET **21S105**

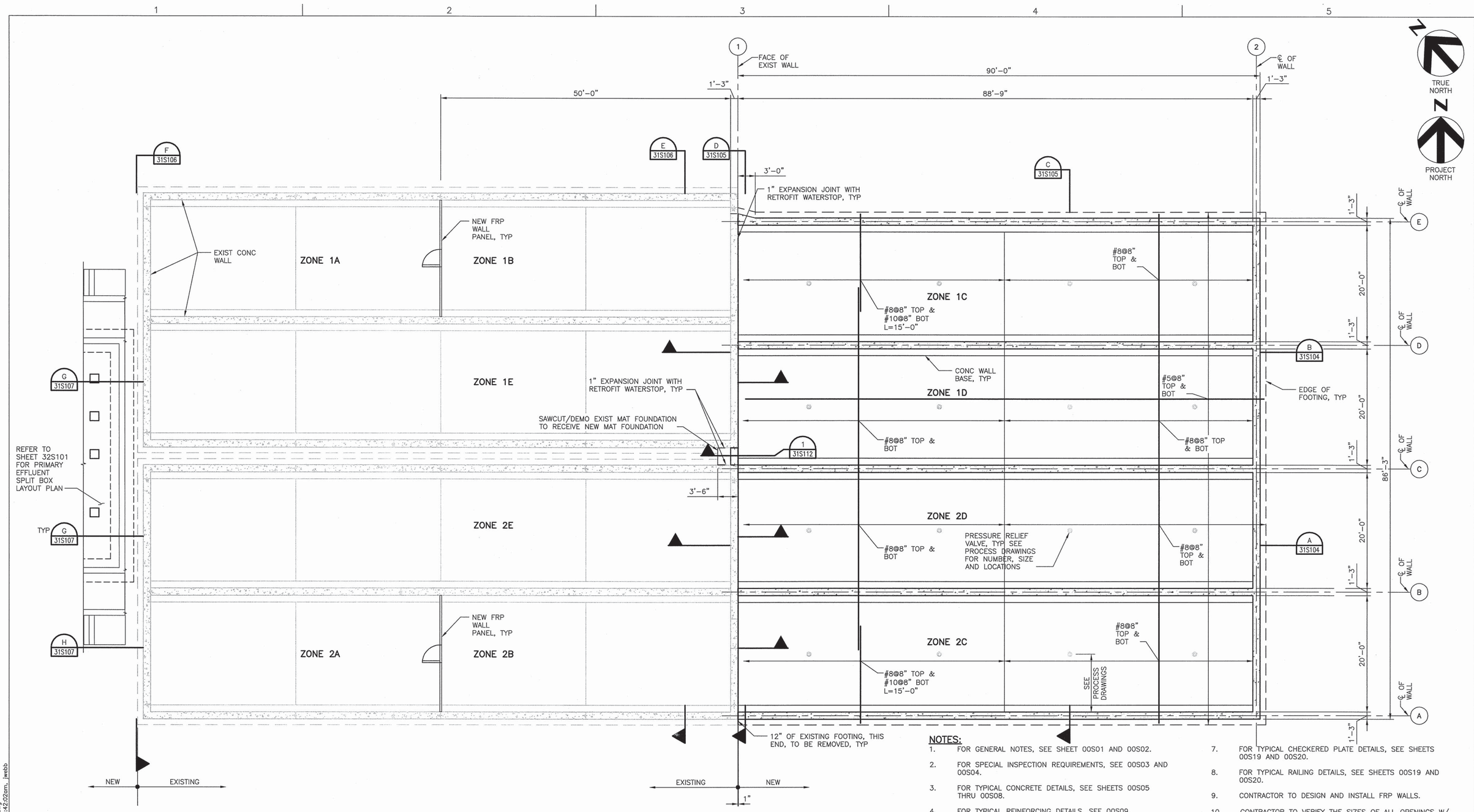


## AERATION BASIN – FOUNDATION PLAN

1/8" = 1'-0"

**NOTES:**

1. FOR GENERAL NOTES, SEE SHEET 00S01 AND 00S02.
2. FOR SPECIAL INSPECTION REQUIREMENTS, SEE 00S03 AND 00S04.
3. FOR TYPICAL CONCRETE DETAILS, SEE SHEETS 00S05 THRU 00S08.
4. FOR TYPICAL REINFORCING DETAILS, SEE 00S09.
5. FOR TYPICAL CONCRETE BEAM, SLAB, AND REINFORCEMENTS SEE SHEETS 13S107 THRU 13S110.
6. ALUMINUM CHECKERED PLATE AND SUPPORT BEAM SIZES, RAILINGS WILL BE DESIGNED PER THE CONTRACTOR'S DESIGN. SEE DEFERRED SUBMITTALS ON SHEET 00S01.
7. FOR TYPICAL CHECKERED PLATE DETAILS, SEE SHEETS 00S19 AND 00S20.
8. FOR TYPICAL RAILING DETAILS, SEE SHEETS 00S19 AND 00S20.
9. CONTRACTOR TO DESIGN AND INSTALL FRP WALLS.
10. CONTRACTOR TO VERIFY THE SIZES OF ALL OPENINGS W/ PROCESS DRAWINGS.
11. FOR NUMBER, SIZE AND SPACING OF PRESSURE RELIEF VALVE, SEE PROCESS DRAWINGS.

FILE: 215786-31S101.dwg
DATE: Jun 30, 2015-8:42:02am, jwebb

HDR Engineering, Inc.

| ISSUE | DATE | DESCRIPTION |
|---|---|---|
| A | JUNE 2015 | ISSUED FOR BID |

| | |
|---|---|
| PROJECT MANAGER | C. OLSON |
| DESIGNED | M MOSTAFA |
| DESIGNED | |
| CHECKED | O. TAVANGAR |
| DRAWN | D. ELDREDGE |
| DATE | JUNE 30, 2015 |
| PROJECT NUMBER | 215786 |

REGISTERED PROFESSIONAL ENGINEER MOHAMMADREZA MOSTAFA NO. 78649 EXP. 09/30/15 CIVIL STATE OF CALIFORNIA 06/30/15

CITY OF PINOLE CALIFORNIA 1903

PINOLE/HERCULES WATER POLLUTION CONTROL PLANT UPGRADE CLIENT PN

**STRUCTURAL**

**AERATION BASINS EXPANSION FOUNDATION PLAN**

0 1" 2"

| | |
|---|---|
| FILENAME | 215786-31S101 |
| SCALE | AS NOTED |

SHEET 31S101

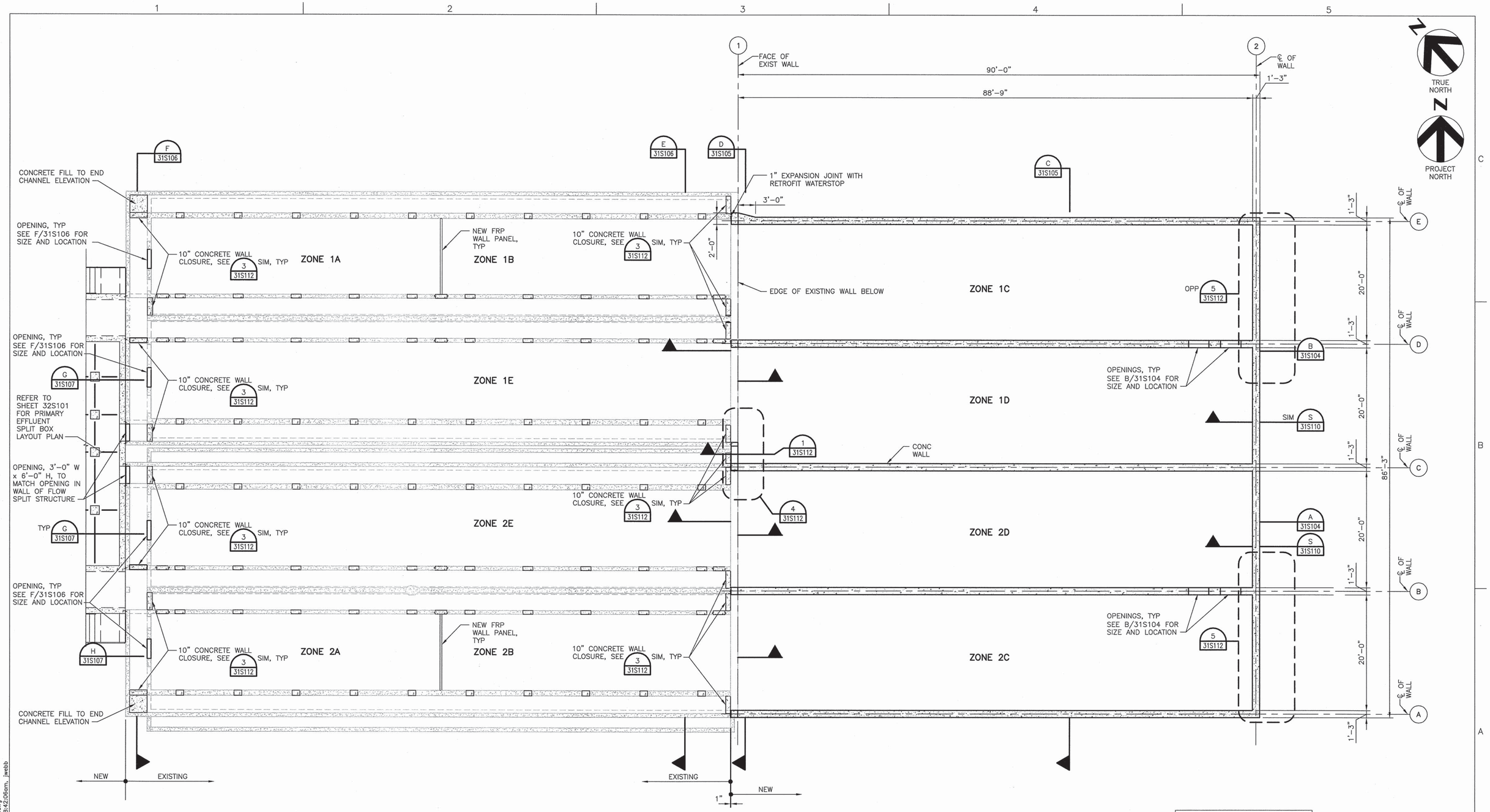


## AERATION BASIN – PLAN AT 109.5

1/8" = 1'-0"

SEE NOTES ON 31S101

FILE: 215786-31S102.dwg
DATE: Jun 30, 2015-8:42:06am, jwebb

HDR Engineering, Inc.

| ISSUE | DATE | DESCRIPTION |
|---|---|---|
| A | JUNE 2015 | ISSUED FOR BID |

| | |
|---|---|
| PROJECT MANAGER | C. OLSON |
| DESIGNED | M MOSTAFA |
| DESIGNED | |
| CHECKED | O. TAVANGAR |
| DRAWN | D. ELDREDGE |
| DATE | JUNE 30, 2015 |
| PROJECT NUMBER | 215786 |

REGISTERED PROFESSIONAL ENGINEER MOHAMMADREZA MOSTAFA NO. 78649 EXP. 09/30/15 CIVIL STATE OF CALIFORNIA 06/30/15

CITY OF PINOLE CALIFORNIA 1903

PINOLE/HERCULES
WATER POLLUTION
CONTROL PLANT UPGRADE
CLIENT PN

**STRUCTURAL**

**AERATION BASINS EXPANSION PLAN AT 109.5**

0 1" 2"

| | |
|---|---|
| FILENAME | 215786-31S102 |
| SCALE | AS NOTED |

SHEET **31S102**

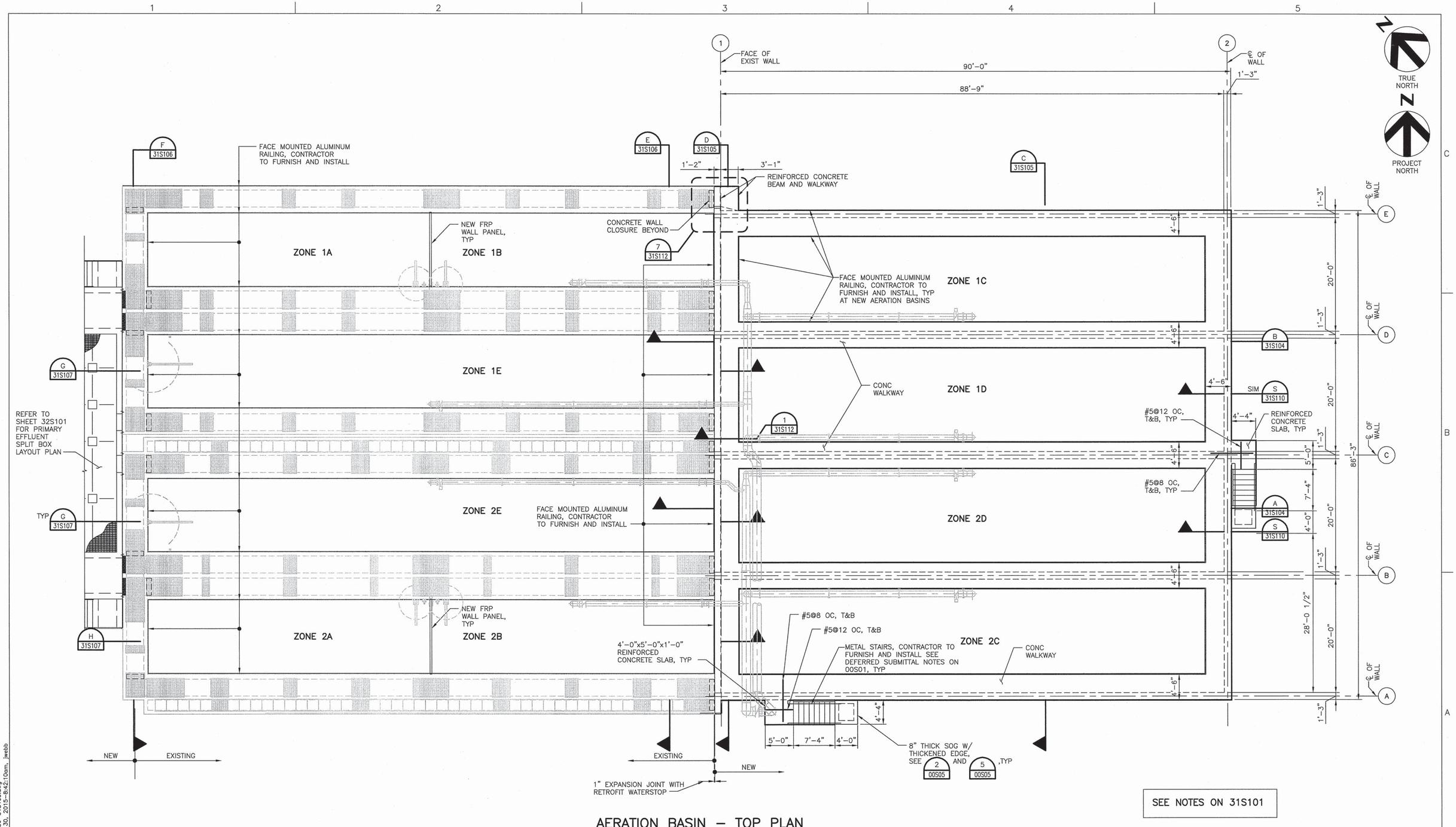


SEE NOTES ON 31S101

## AERATION BASIN – TOP PLAN

1/8" = 1'–0"

FILE: 215786–31S103.dwg
DATE: Jun 30, 2015–8:42:10am, jwebb

HDR Engineering, Inc.

| ISSUE | DATE | DESCRIPTION |
|---|---|---|
| A | JUNE 2015 | ISSUED FOR BID |

| | |
|---|---|
| PROJECT MANAGER | C. OLSON |
| | |
| DESIGNED | M MOSTAFA |
| DESIGNED | |
| CHECKED | O. TAVANGAR |
| DRAWN | D. ELDREDGE |
| DATE | JUNE 30, 2015 |
| | |
| PROJECT NUMBER | 215786 |

REGISTERED PROFESSIONAL ENGINEER
MOHAMMADREZA MOSTAFA
NO. 78649
EXP. 09/30/15
CIVIL
STATE OF CALIFORNIA
06/30/15

CITY OF PINOLE CALIFORNIA 1903

PINOLE/HERCULES
WATER POLLUTION
CONTROL PLANT UPGRADE
CLIENT PN

**STRUCTURAL**

**AERATION BASINS EXPANSION TOP PLAN**

0 1" 2"

| | |
|---|---|
| FILENAME | 215786–31S103 |
| SCALE | AS NOTED |

SHEET **31S103**

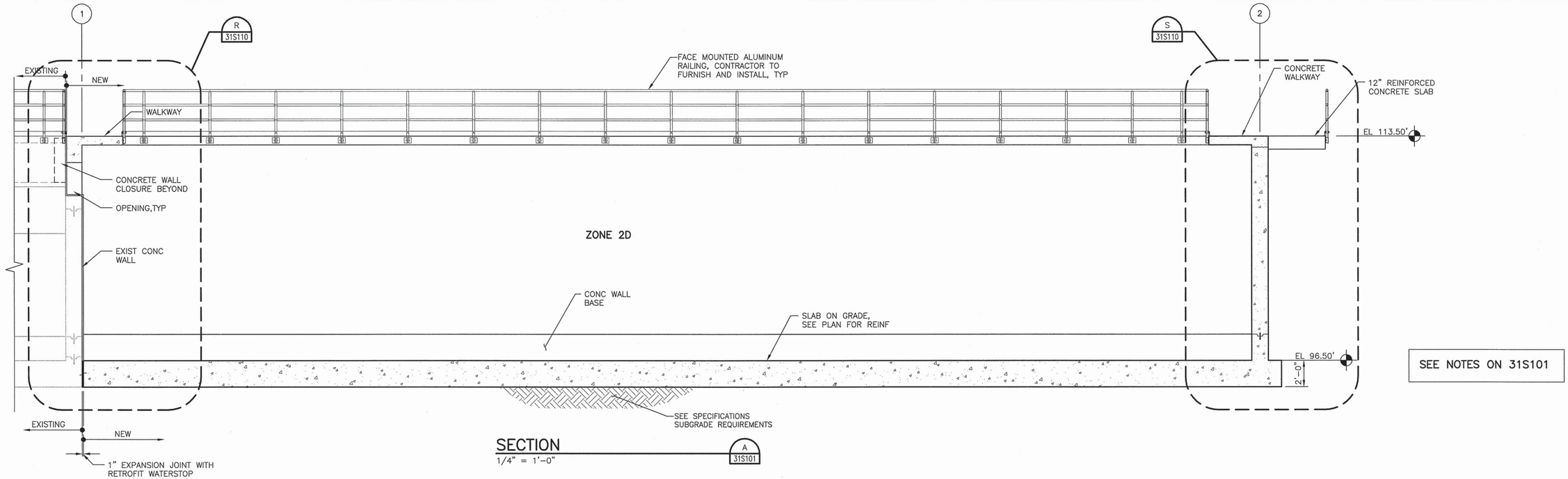


SECTION
1/4" = 1'-0"
A 31S101

SEE NOTES ON 31S101

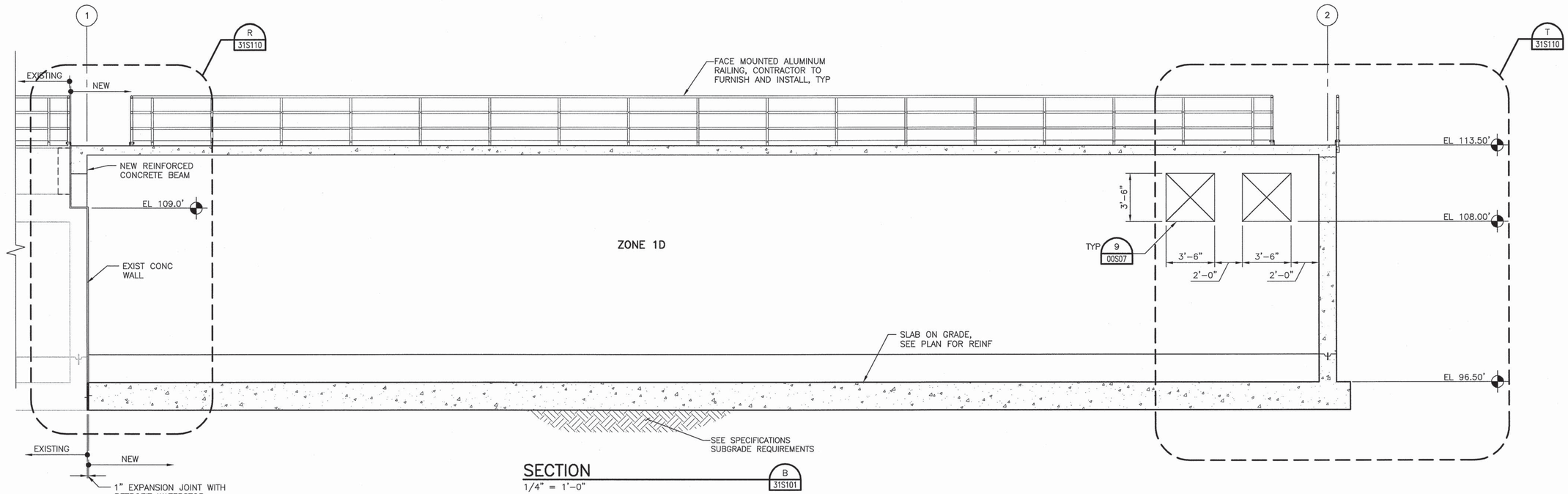


SECTION
1/4" = 1'-0"
B 31S101

FILE: 215786-31S104.dwg
DATE: Jun 30, 2015-8:42:14am, jwebb

HDR
HDR Engineering, Inc.

| ISSUE | DATE | DESCRIPTION |
|---|---|---|
| A | JUNE 2015 | ISSUED FOR BID |

| | |
|---|---|
| PROJECT MANAGER | C. OLSON |
| DESIGNED | M MOSTAFA |
| DESIGNED | |
| CHECKED | O. TAVANGAR |
| DRAWN | D. ELDREDGE |
| DATE | JUNE 30, 2015 |
| PROJECT NUMBER | 215786 |

REGISTERED PROFESSIONAL ENGINEER
MOHAMMADREZA MOSTAFA
NO. 78649
EXP. 09/30/15
CIVIL
STATE OF CALIFORNIA
06/30/15

CITY OF PINOLE CALIFORNIA 1903

PINOLE/HERCULES
WATER POLLUTION
CONTROL PLANT UPGRADE
CLIENT PN

**STRUCTURAL**

**AERATION BASINS EXPANSION**
**SECTIONS 1**

0 1" 2"

| FILENAME | 215786-31S104 |
|---|---|
| SCALE | AS NOTED |

SHEET
**31S104**

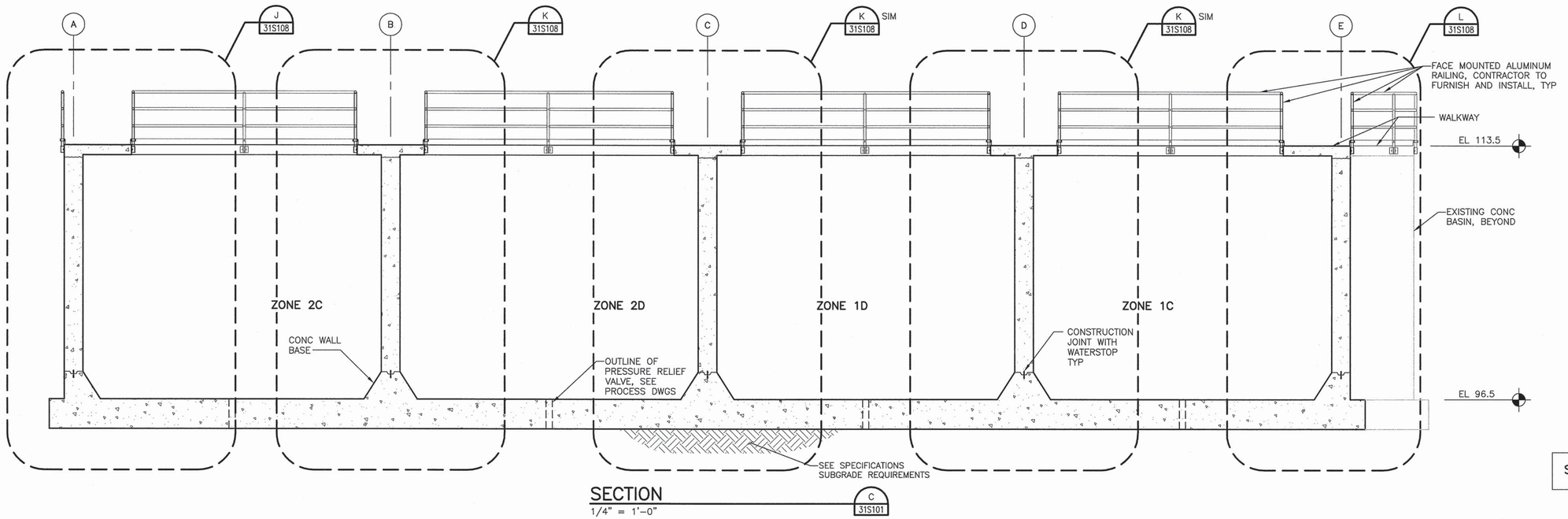


SEE NOTES ON 31S101

## SECTION
1/4" = 1'-0"

C
31S101

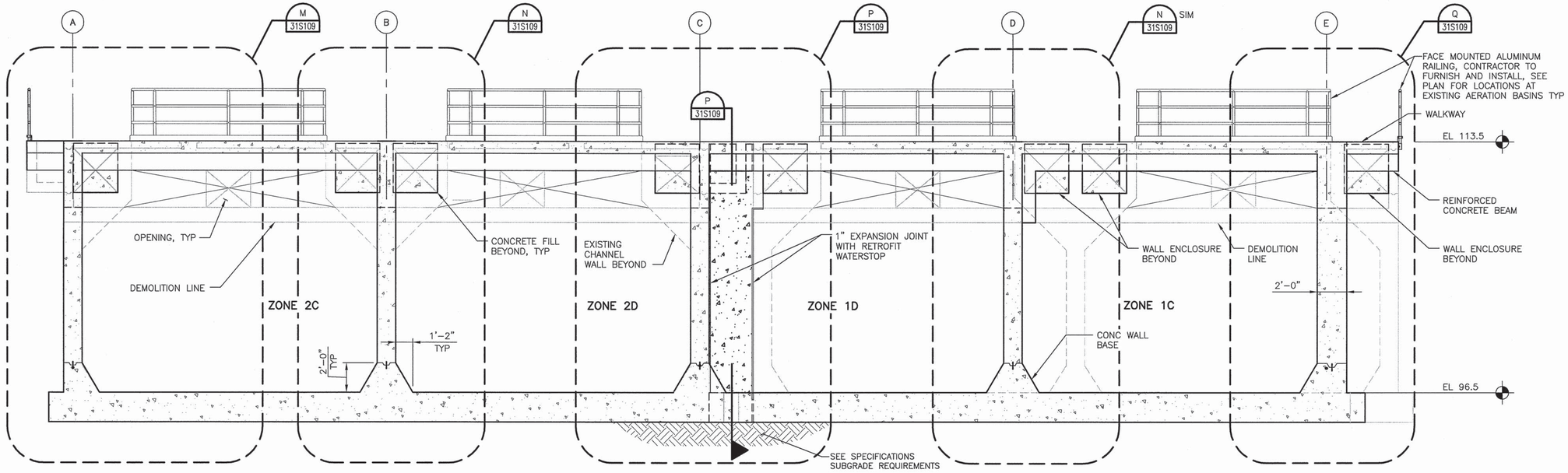


## SECTION
1/4" = 1'-0"

D
31S101

FILE: 215786-31S105.dwg
DATE: Jun 30, 2015-8:42:18am, jwebb

HDR Engineering, Inc.

| ISSUE | DATE | DESCRIPTION |
|---|---|---|
| A | JUNE 2015 | ISSUED FOR BID |

| | |
|---|---|
| PROJECT MANAGER | C. OLSON |
| DESIGNED | M MOSTAFA |
| DESIGNED | |
| CHECKED | O. TAVANGAR |
| DRAWN | D. ELDREDGE |
| DATE | JUNE 30, 2015 |
| PROJECT NUMBER | 215786 |

REGISTERED PROFESSIONAL ENGINEER
MOHAMMADREZA MOSTAFA
NO. 78649
EXP. 09/30/15
CIVIL
STATE OF CALIFORNIA
06/30/15

CITY OF PINOLE CALIFORNIA 1903

PINOLE/HERCULES
WATER POLLUTION
CONTROL PLANT UPGRADE
CLIENT PN

**STRUCTURAL**

**AERATION BASINS EXPANSION SECTIONS 2**

0 1" 2"

| FILENAME | 215786-31S105 |
|---|---|
| SCALE | AS NOTED |

SHEET
**31S105**

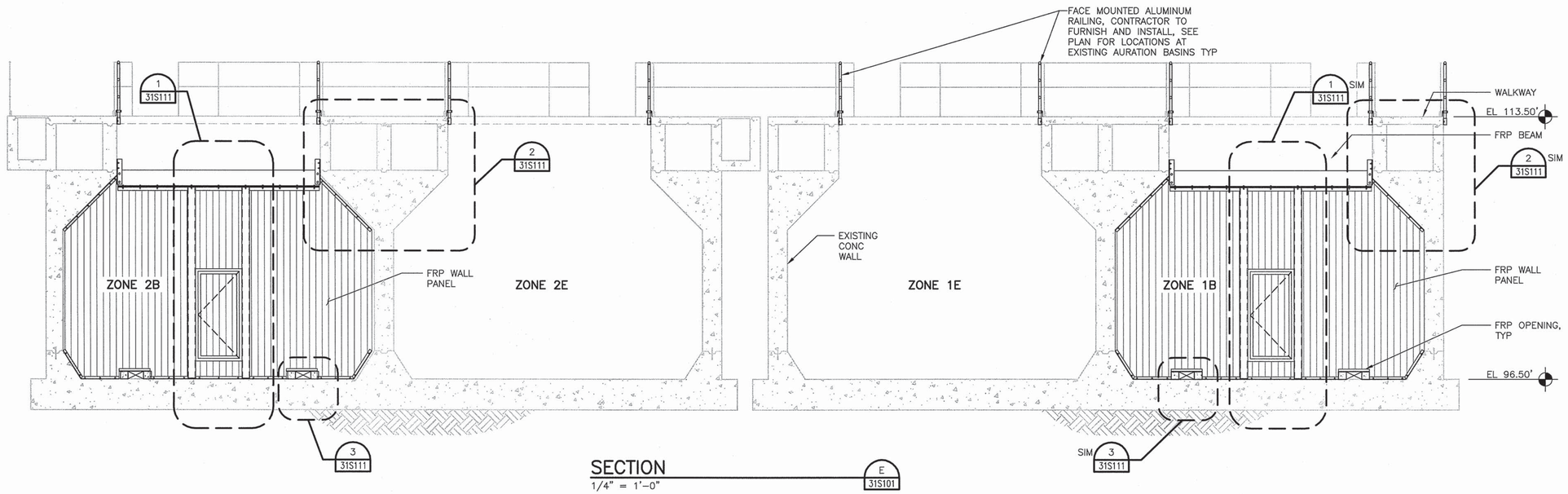


SECTION
1/4" = 1'-0"
E 31S101

SEE NOTES ON 31S101

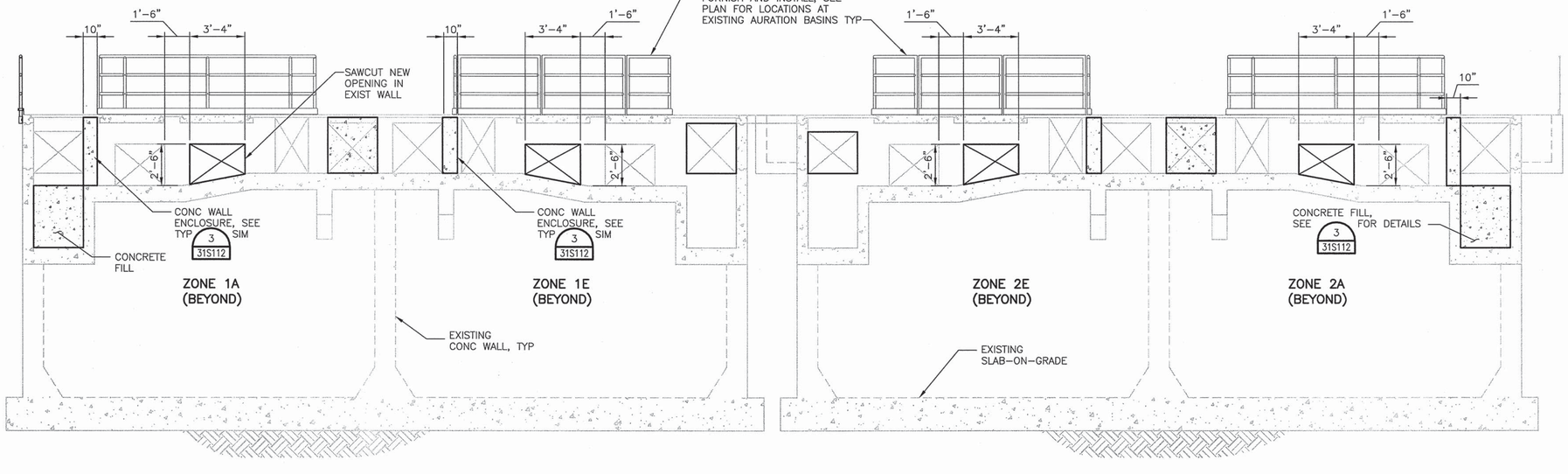


SECTION
1/4" = 1'-0"
F 31S101

FILE: 215786-31S106.dwg
DATE: Jun 30, 2015-8:42:22am, jwebb

HDR Engineering, Inc.

| ISSUE | DATE | DESCRIPTION |
|---|---|---|
| A | JUNE 2015 | ISSUED FOR BID |

| | |
|---|---|
| PROJECT MANAGER | C. OLSON |
| | |
| DESIGNED | M MOSTAFA |
| DESIGNED | |
| CHECKED | O. TAVANGAR |
| DRAWN | D. ELDREDGE |
| DATE | JUNE 30, 2015 |
| | |
| PROJECT NUMBER | 215786 |

REGISTERED PROFESSIONAL ENGINEER
MOHAMMADREZA MOSTAFA
NO. 78649
EXP. 09/30/15
CIVIL
STATE OF CALIFORNIA
06/30/15

CITY OF PINOLE CALIFORNIA 1903

PINOLE/HERCULES
WATER POLLUTION
CONTROL PLANT UPGRADE
CLIENT PN

**STRUCTURAL**

**AERATION BASINS EXPANSION SECTIONS 3**

0 1" 2"

| | |
|---|---|
| FILENAME | 215786-31S106 |
| SCALE | AS NOTED |

SHEET
**31S106**

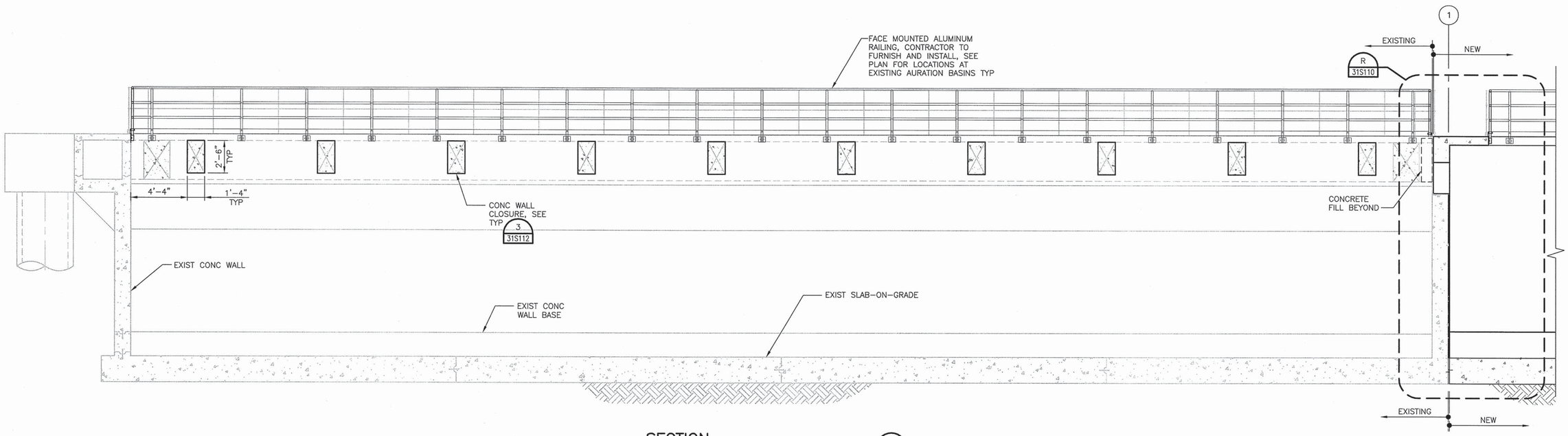


SECTION
1/4" = 1'-0"
G
31S101

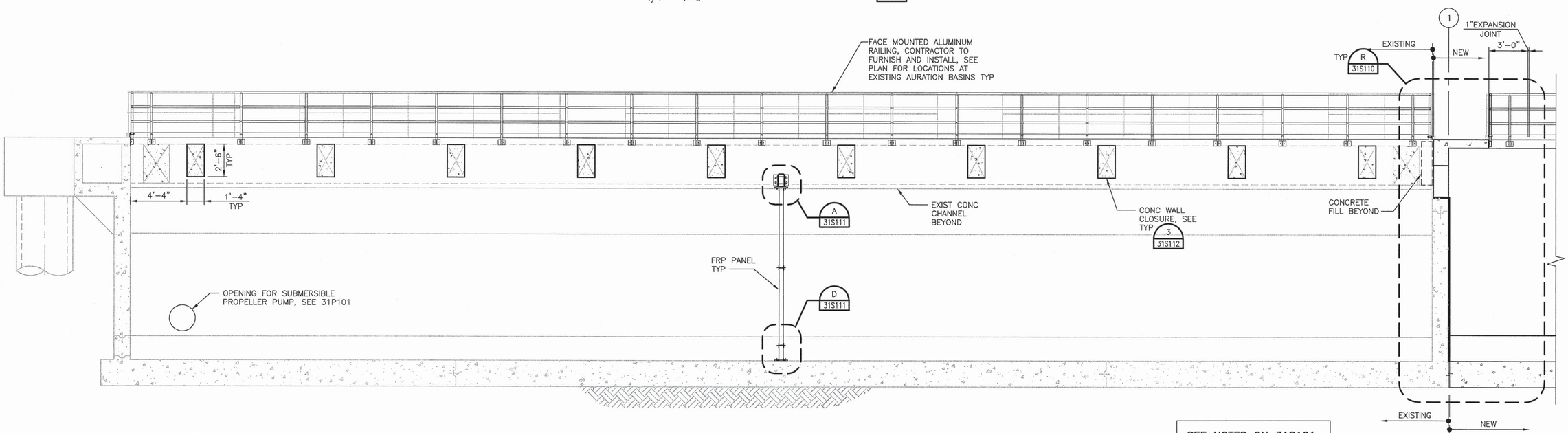


SECTION
1/4" = 1'-0"
H
31S101

SEE NOTES ON 31S101

FILE: 215786-31S107.dwg
DATE: Jun 30, 2015-8:42:27am, jwebb

HDR
HDR Engineering, Inc.

| ISSUE | DATE | DESCRIPTION |
|---|---|---|
| A | JUNE 2015 | ISSUED FOR BID |

| | |
|---|---|
| PROJECT MANAGER | C. OLSON |
| | |
| DESIGNED | M MOSTAFA |
| DESIGNED | |
| CHECKED | O. TAVANGAR |
| DRAWN | D. ELDREDGE |
| DATE | JUNE 30, 2015 |
| | |
| PROJECT NUMBER | 215786 |

REGISTERED PROFESSIONAL ENGINEER
MOHAMMADREZA MOSTAFA
NO. 78649
EXP. 09/30/15
CIVIL
STATE OF CALIFORNIA
06/30/15

CITY OF PINOLE CALIFORNIA 1903

PINOLE/HERCULES
WATER POLLUTION
CONTROL PLANT UPGRADE
CLIENT PN

**STRUCTURAL**

**AERATION BASINS EXPANSION SECTIONS 4**

0 1" 2"

| | |
|---|---|
| FILENAME | 215786-31S107 |
| SCALE | AS NOTED |

SHEET
**31S107**

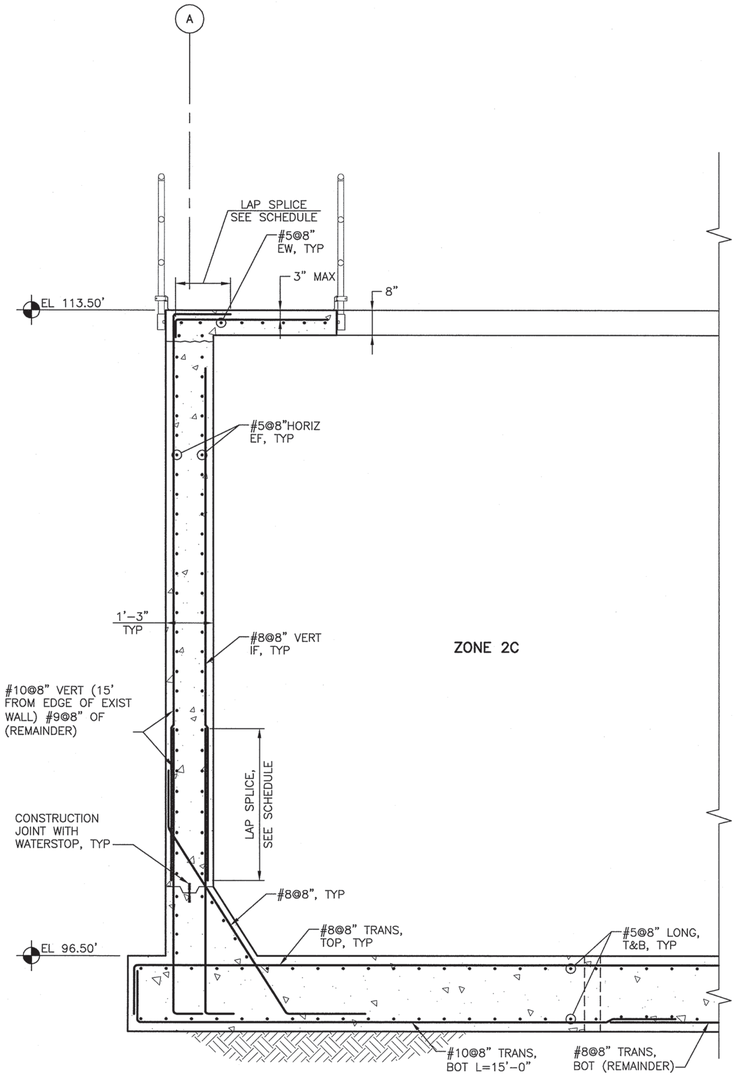


SECTION
1/2" = 1'-0"
J
31S105

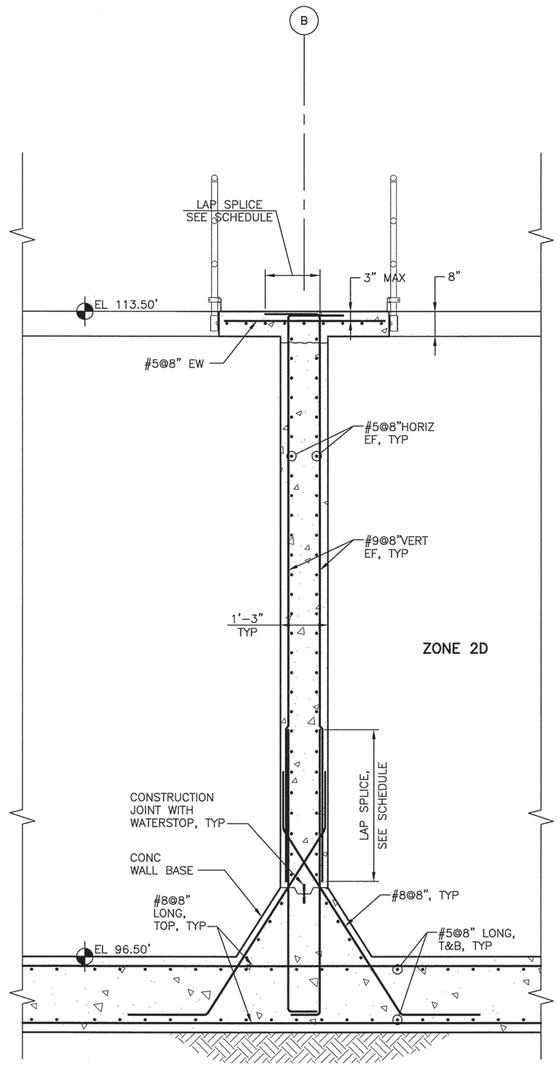


SECTION
1/2" = 1'-0"
K
31S105

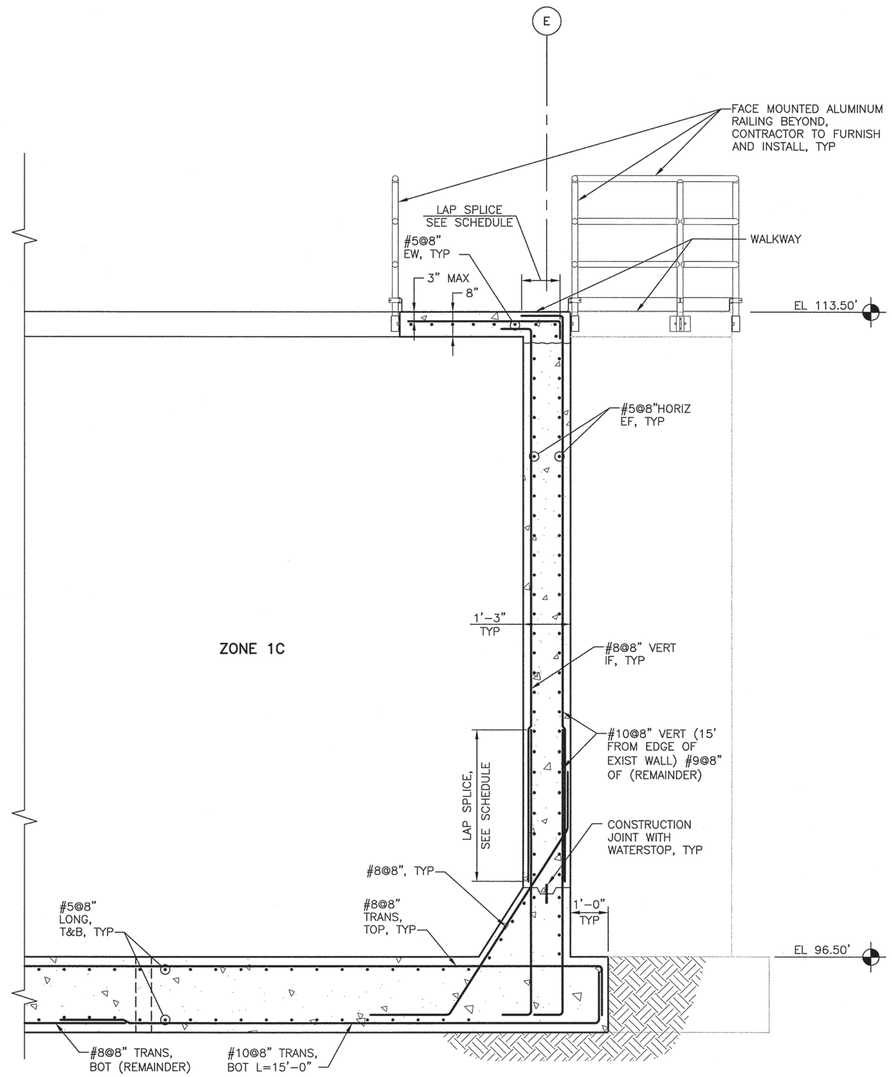


SECTION
1/2" = 1'-0"
L
31S105

SEE NOTES ON 31S101

FILE: 215786-31S108.dwg
DATE: Jun 30, 2015-8:42:31am, jwebb

HDR Engineering, Inc.

| ISSUE | DATE | DESCRIPTION |
|---|---|---|
| A | JUNE 2015 | ISSUED FOR BID |

| | |
|---|---|
| PROJECT MANAGER | C. OLSON |
| DESIGNED | M MOSTAFA |
| DESIGNED | |
| CHECKED | O. TAVANGAR |
| DRAWN | D. ELDREDGE |
| DATE | JUNE 30, 2015 |
| PROJECT NUMBER | 215786 |

REGISTERED PROFESSIONAL ENGINEER
MOHAMMADREZA MOSTAFA
NO. 78649
EXP. 09/30/15
CIVIL
STATE OF CALIFORNIA
06/30/15

CITY OF PINOLE CALIFORNIA 1903

PINOLE/HERCULES
WATER POLLUTION
CONTROL PLANT UPGRADE
CLIENT PN

**STRUCTURAL**

**AERATION BASINS EXPANSION SECTIONS AND DETAILS**

0 1" 2"

| | |
|---|---|
| FILENAME | 215786-31S108 |
| SCALE | AS NOTED |

SHEET
**31S108**

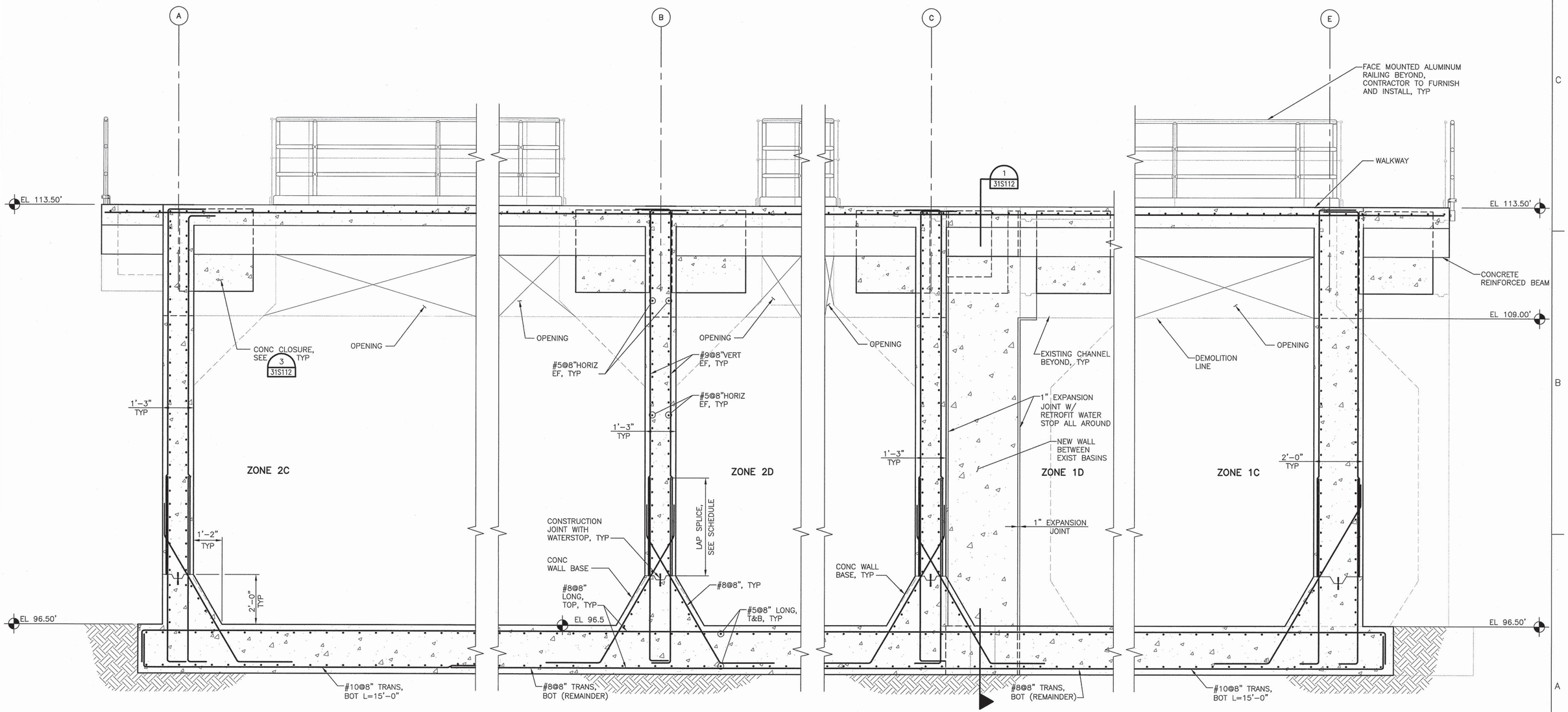


NOTE:
FOR INFO NOT SHOWN, SEE N/31S109 SIM

NOTE:
FOR WALL REINF BEYOND NEW TO EXIST TRANSITION SEE SHEET 31S108, TYP

NOTE:
FOR INFO NOT SHOWN, SEE N/31S109

NOTE:
FOR INFO NOT SHOWN, SEE N/31S109 SIM

SECTION M 31S105
1/2" = 1'-0"

SECTION N 31S105
1/2" = 1'-0"

SECTION P 31S105
1/2" = 1'-0"

SECTION Q 31S105
1/2" = 1'-0"

FILE: 215786-31S109.dwg
DATE: Jun 30, 2015-8:42:34am, jwebb

HDR Engineering, Inc.

| ISSUE | DATE | DESCRIPTION |
|---|---|---|
| A | JUNE 2015 | ISSUED FOR BID |

| | |
|---|---|
| PROJECT MANAGER | C. OLSON |
| DESIGNED | M MOSTAFA |
| DESIGNED | |
| CHECKED | O. TAVANGAR |
| DRAWN | D. ELDREDGE |
| DATE | JUNE 30, 2015 |
| PROJECT NUMBER | 215786 |

REGISTERED PROFESSIONAL ENGINEER MOHAMMADREZA MOSTAFA NO. 78649 EXP. 09/30/15 CIVIL STATE OF CALIFORNIA 06/30/15

CITY OF PINOLE CALIFORNIA 1903

PINOLE/HERCULES
WATER POLLUTION
CONTROL PLANT UPGRADE
CLIENT PN

**STRUCTURAL**

**AERATION BASINS EXPANSION SECTIONS AND DETAILS**

0 1" 2"

| | |
|---|---|
| FILENAME | 215786-31S109 |
| SCALE | AS NOTED |

SHEET 31S109

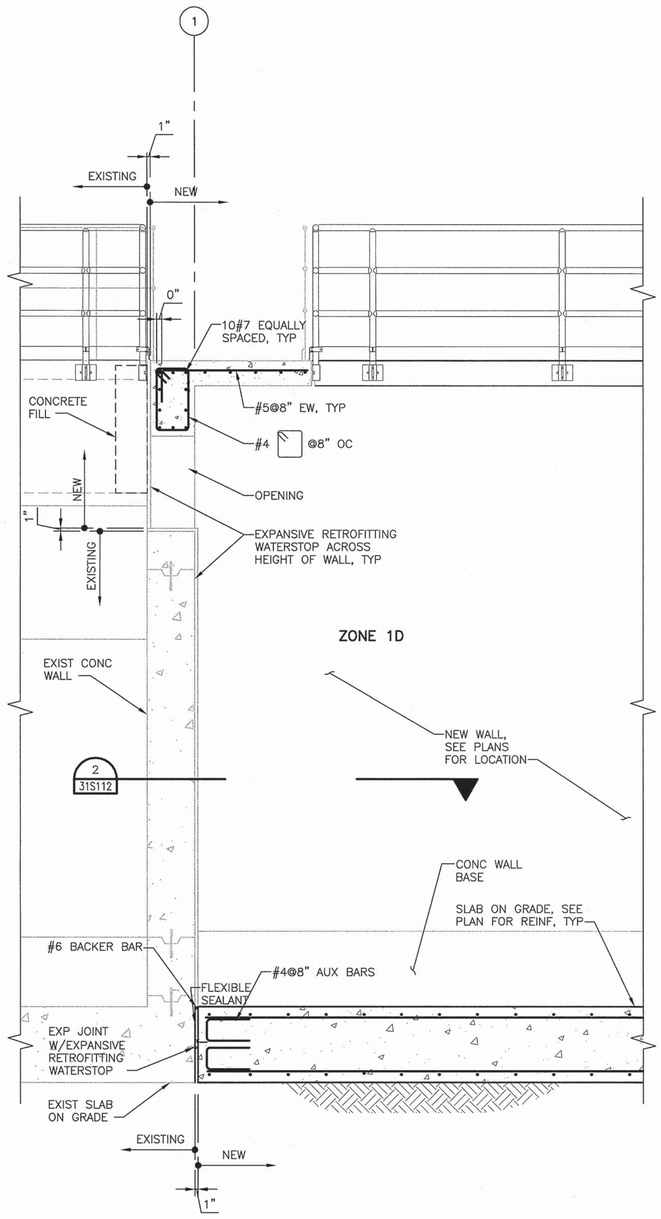


SECTION
1/2" = 1'-0"
R
31S104

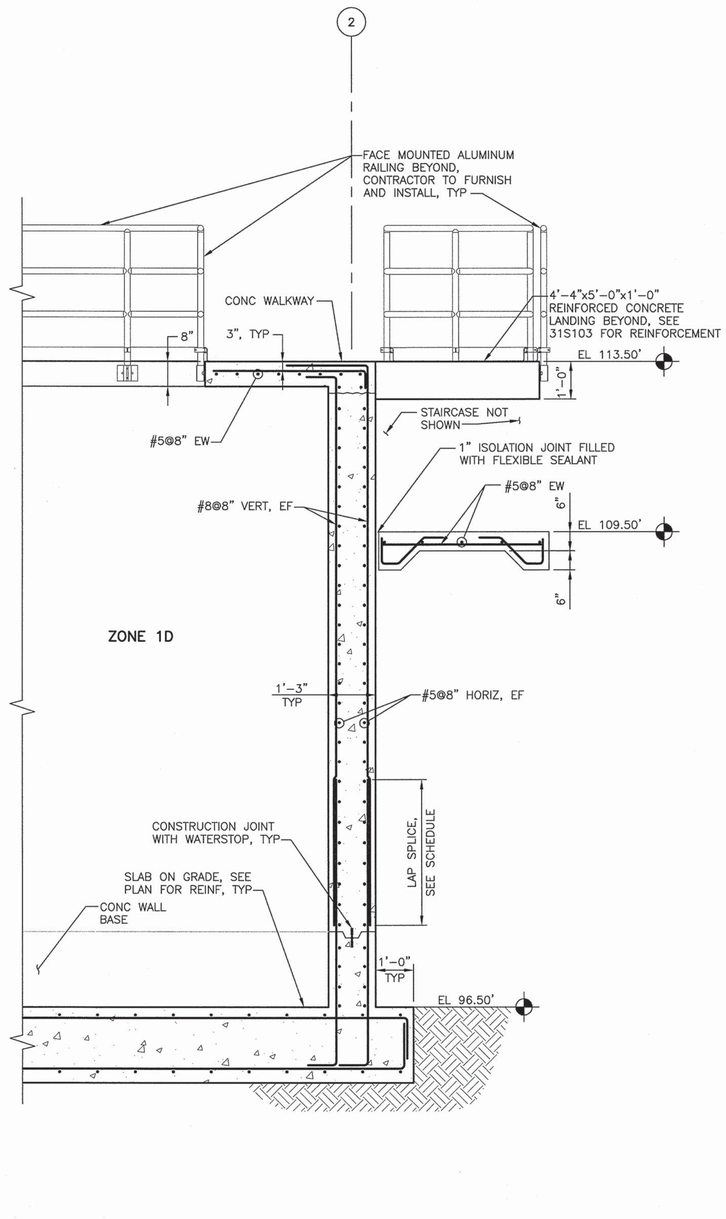


SECTION
1/2" = 1'-0"
S
31S104

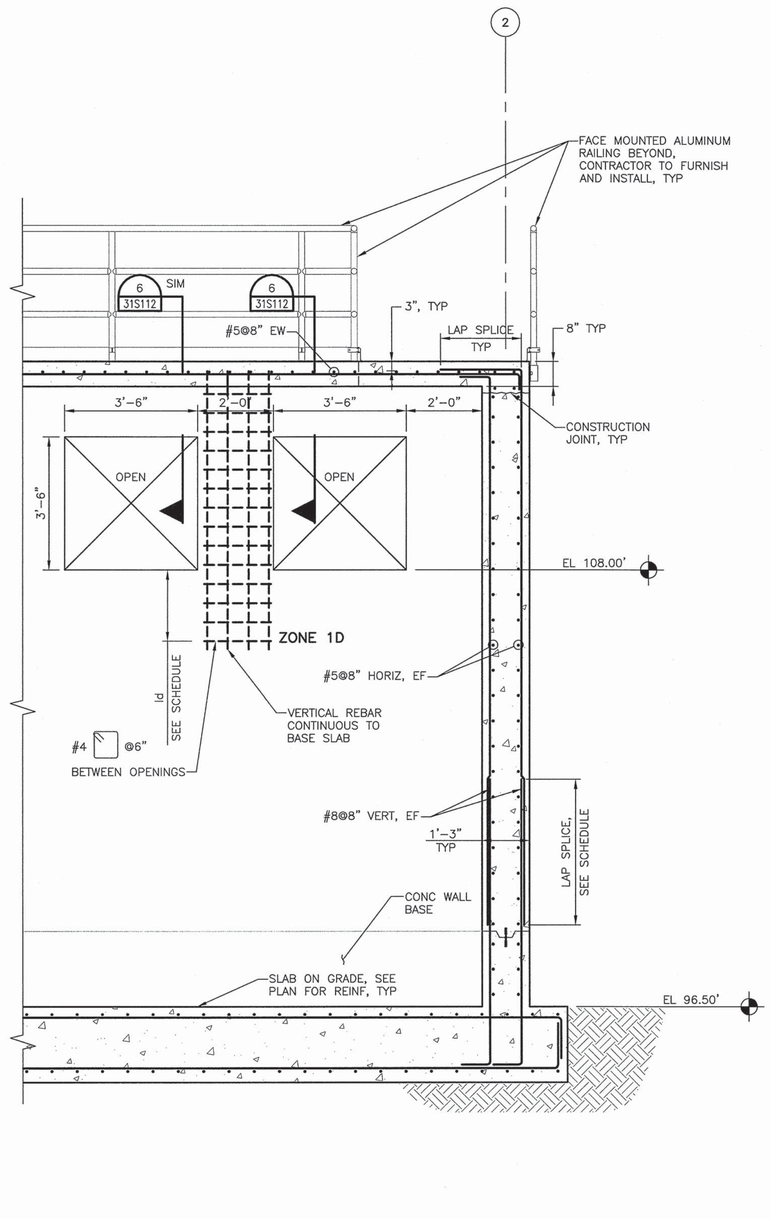


SECTION
1/2" = 1'-0"
T
31S104

FILE: 215786-31S110.dwg
DATE: Jun 30, 2015-8:42:38am, jwebb

HDR
HDR Engineering, Inc.

| ISSUE | DATE | DESCRIPTION |
|---|---|---|
| A | JUNE 2015 | ISSUED FOR BID |

| | |
|---|---|
| PROJECT MANAGER | C. OLSON |
| DESIGNED | M MOSTAFA |
| DESIGNED | |
| CHECKED | O. TAVANGAR |
| DRAWN | D. ELDREDGE |
| DATE | JUNE 30, 2015 |
| PROJECT NUMBER | 215786 |

REGISTERED PROFESSIONAL ENGINEER
MOHAMMADREZA MOSTAFA
NO. 78649
EXP. 09/30/15
CIVIL
STATE OF CALIFORNIA
06/30/15

CITY OF PINOLE CALIFORNIA 1903

PINOLE/HERCULES
WATER POLLUTION
CONTROL PLANT UPGRADE
CLIENT PN

**STRUCTURAL**

**AERATION BASINS EXPANSION SECTIONS AND DETAILS**

0 1" 2"

| | |
|---|---|
| FILENAME | 215786-31S110 |
| SCALE | AS NOTED |

SHEET
**31S110**

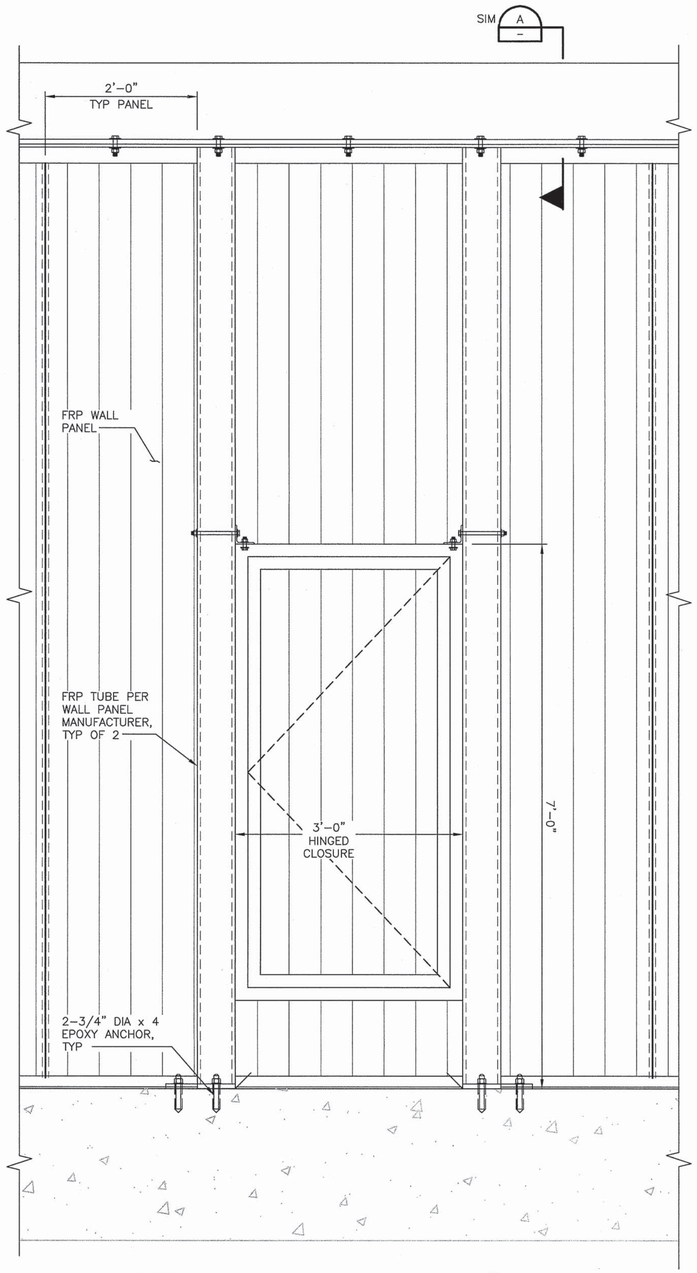


DETAIL 1
3/4" = 1'-0"
31S106

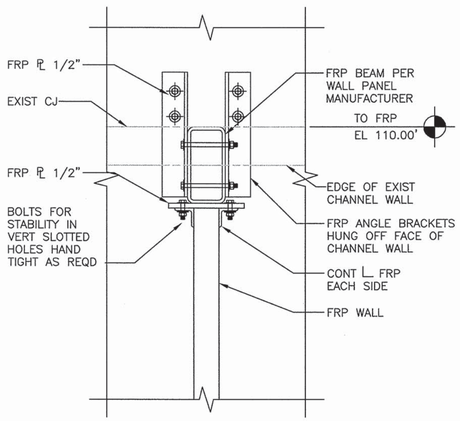


SECTION A
1" = 1'-0"

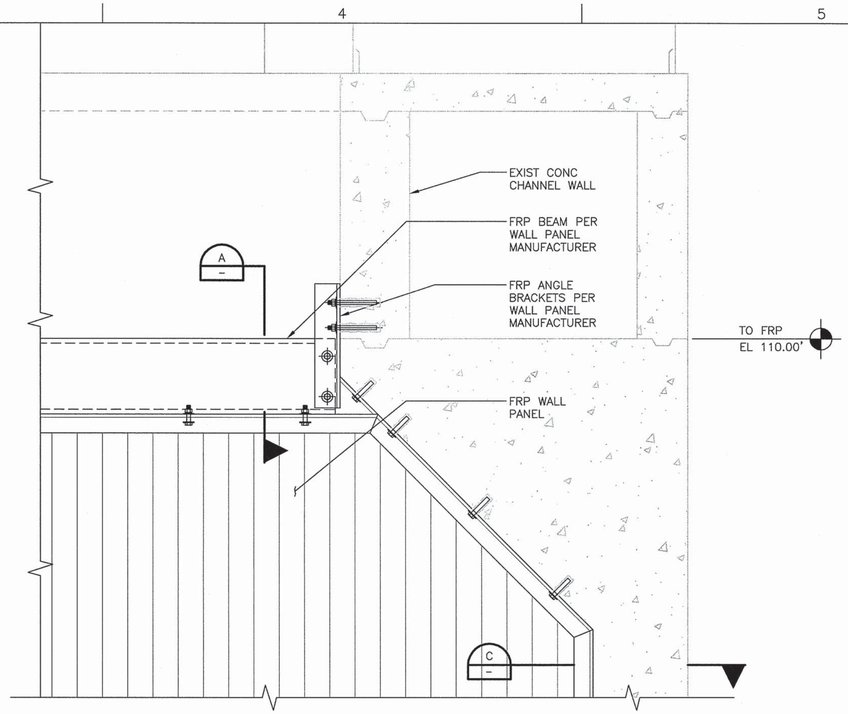


PANEL SUPPORT DETAIL 2
1" = 1'-0"
31S106

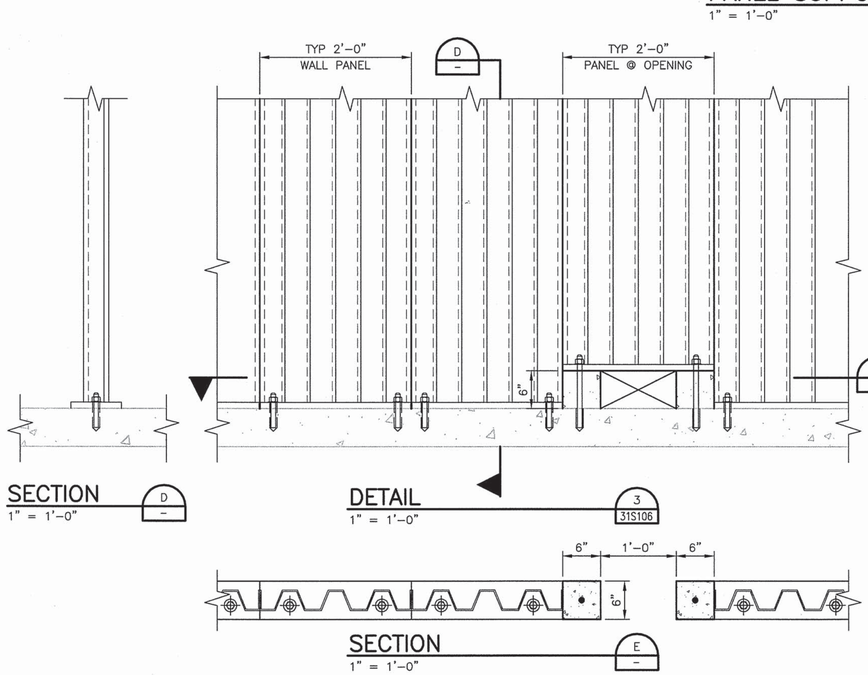


SECTION D
1" = 1'-0"

DETAIL 3
1" = 1'-0"
31S106




SECTION E
1" = 1'-0"

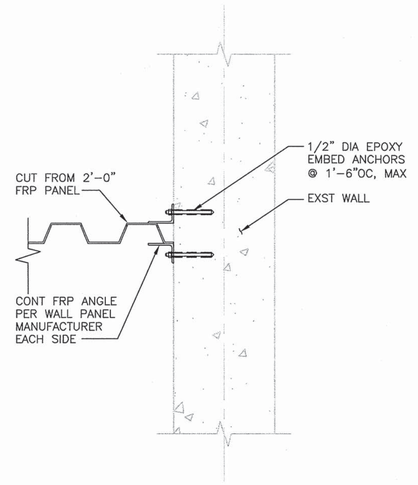


PANEL SUPPORT DETAIL C
1" = 1'-0"

FILE: 215786-31S111.dwg
DATE: Jun 30, 2015-8:42:43am, jwebb

HDR Engineering, Inc.

| ISSUE | DATE | DESCRIPTION |
|---|---|---|
| A | JUNE 2015 | ISSUED FOR BID |

| | |
|---|---|
| PROJECT MANAGER | C. OLSON |
| DESIGNED | M MOSTAFA |
| DESIGNED | |
| CHECKED | O. TAVANGAR |
| DRAWN | D. ELDREDGE |
| DATE | JUNE 30, 2015 |
| PROJECT NUMBER | 215786 |

REGISTERED PROFESSIONAL ENGINEER MOHAMMADREZA MOSTAFA NO. 78649 EXP. 09/30/15 CIVIL STATE OF CALIFORNIA 06/30/15

CITY OF PINOLE CALIFORNIA 1903

PINOLE/HERCULES
WATER POLLUTION
CONTROL PLANT UPGRADE
CLIENT PN

**STRUCTURAL**

**AERATION BASINS EXPANSION SECTION AND DETAILS**

0 1" 2"

| | |
|---|---|
| FILENAME | 215786-31S111 |
| SCALE | AS NOTED |

SHEET 31S111

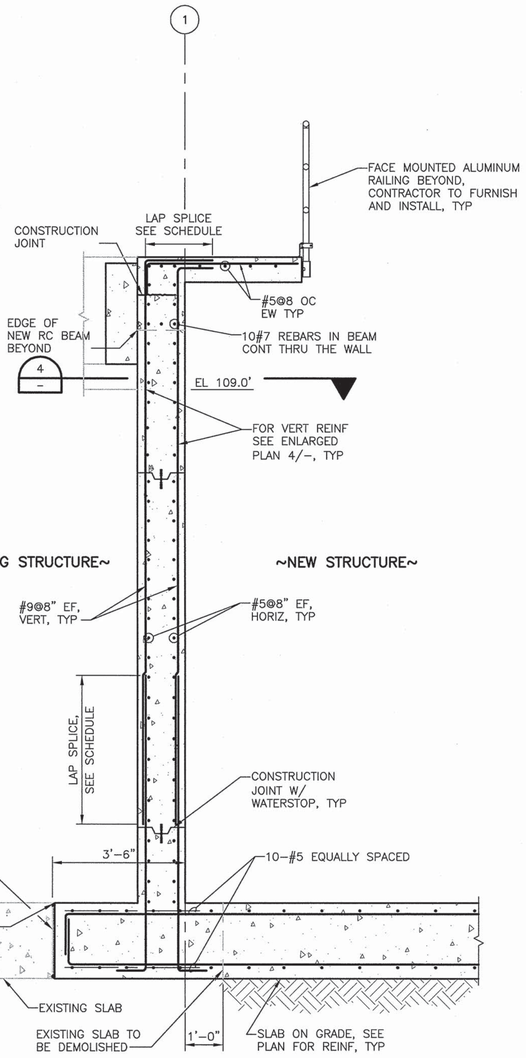


## WALL SECTION AT CHANNEL INFILL

SCALE: 1/2"=1'–0"

1 VAR

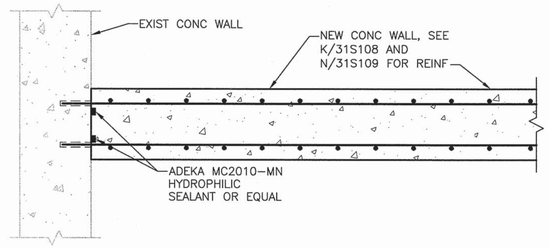


## DETAIL – PLAN VIEW

SCALE: 3/4"=1'–0"

2 31S110

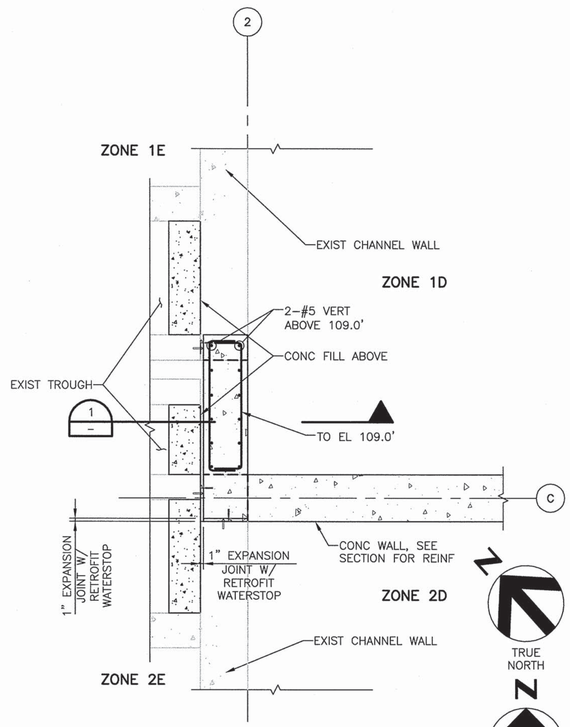


## ENLARGED PLAN AT CHANNEL INFILL

SCALE: 1/2"=1'–0"

4 –

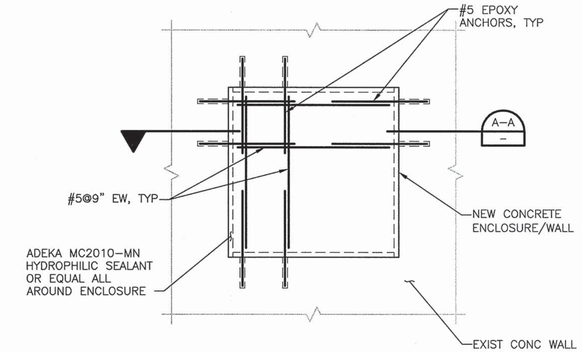


ELEVATION

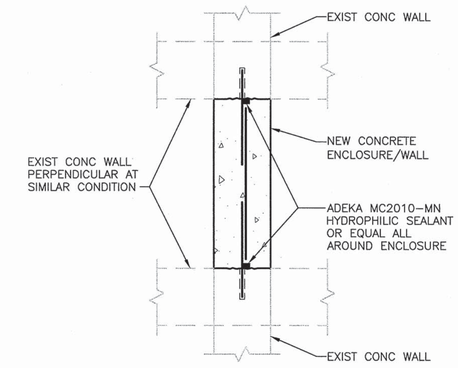


SECTION A–A

## CLOSURE DETAIL

SCALE: 3/4"=1'–0"

3 VAR

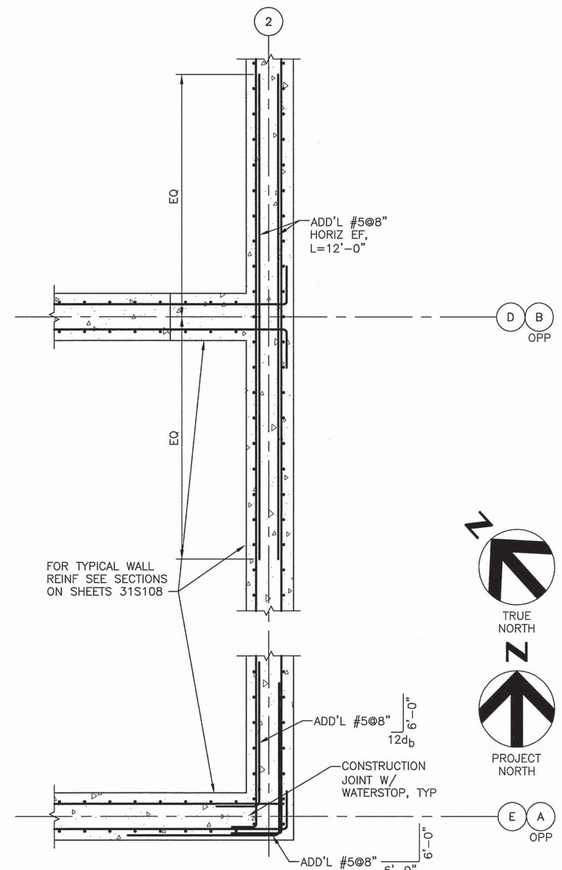


## ENLARGED PLAN AT CHANNEL INFILL

SCALE: 1/2"=1'–0"

5 31S102

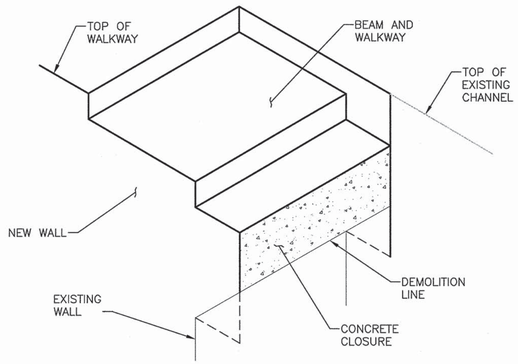


## ISOMETRIC VIEW (FROM GROUND ELEVATION)

SCALE: N.T.S.

7 31S103

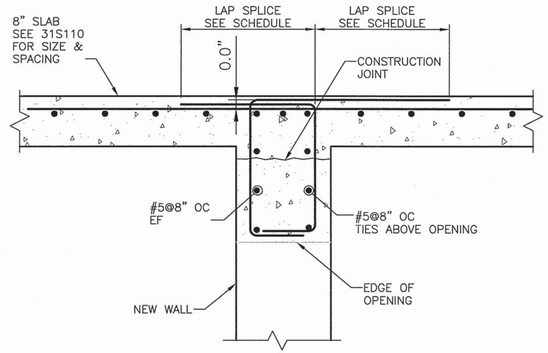


## DETAIL ABOVE OPENING

SCALE: 1"=1'–0"

6 31S110

FILE: 215786–31S112.dwg
DATE: Jun 30, 2015–8:42:50am, jwebb

HDR Engineering, Inc.

| ISSUE | DATE | DESCRIPTION |
|---|---|---|
| A | JUNE 2015 | ISSUED FOR BID |

| | |
|---|---|
| PROJECT MANAGER | C. OLSON |
| | |
| DESIGNED | M MOSTAFA |
| DESIGNED | |
| CHECKED | C. OLSON |
| DRAWN | D. ELDREDGE |
| DATE | JUNE 30, 2015 |
| | |
| PROJECT NUMBER | 215786 |

REGISTERED PROFESSIONAL ENGINEER MORAMMOREZA MOSTAFA NO. 78649 EXP. 09/30/15 CIVIL STATE OF CALIFORNIA

06/30/15

CITY OF PINOLE CALIFORNIA 1903

PINOLE/HERCULES
WATER POLLUTION
CONTROL PLANT UPGRADE
CLIENT PN

**STRUCTURAL**

**AERATION BASINS EXPANSION**
**ENLARGED PLANS, SECTIONS AND DETAILS**

0 1" 2"

| | |
|---|---|
| FILENAME | 215786–31S112 |
| SCALE | AS NOTED |

SHEET **31S112**

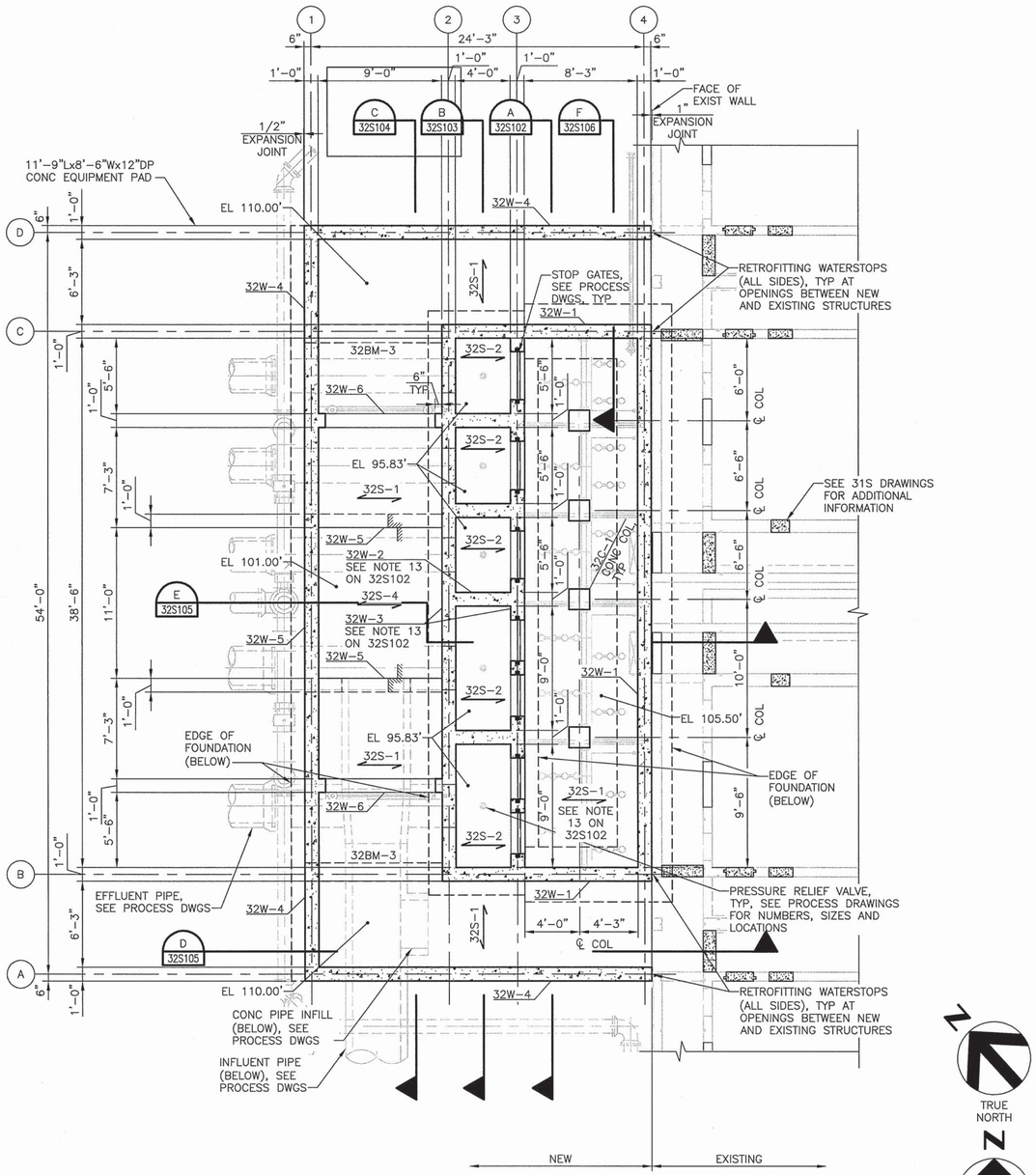


NOTE:
FOR NOTES AND INFORMATION NOT SHOWN, SEE S32S102.

## FOUNDATION PLAN
3/16" = 1'-0"

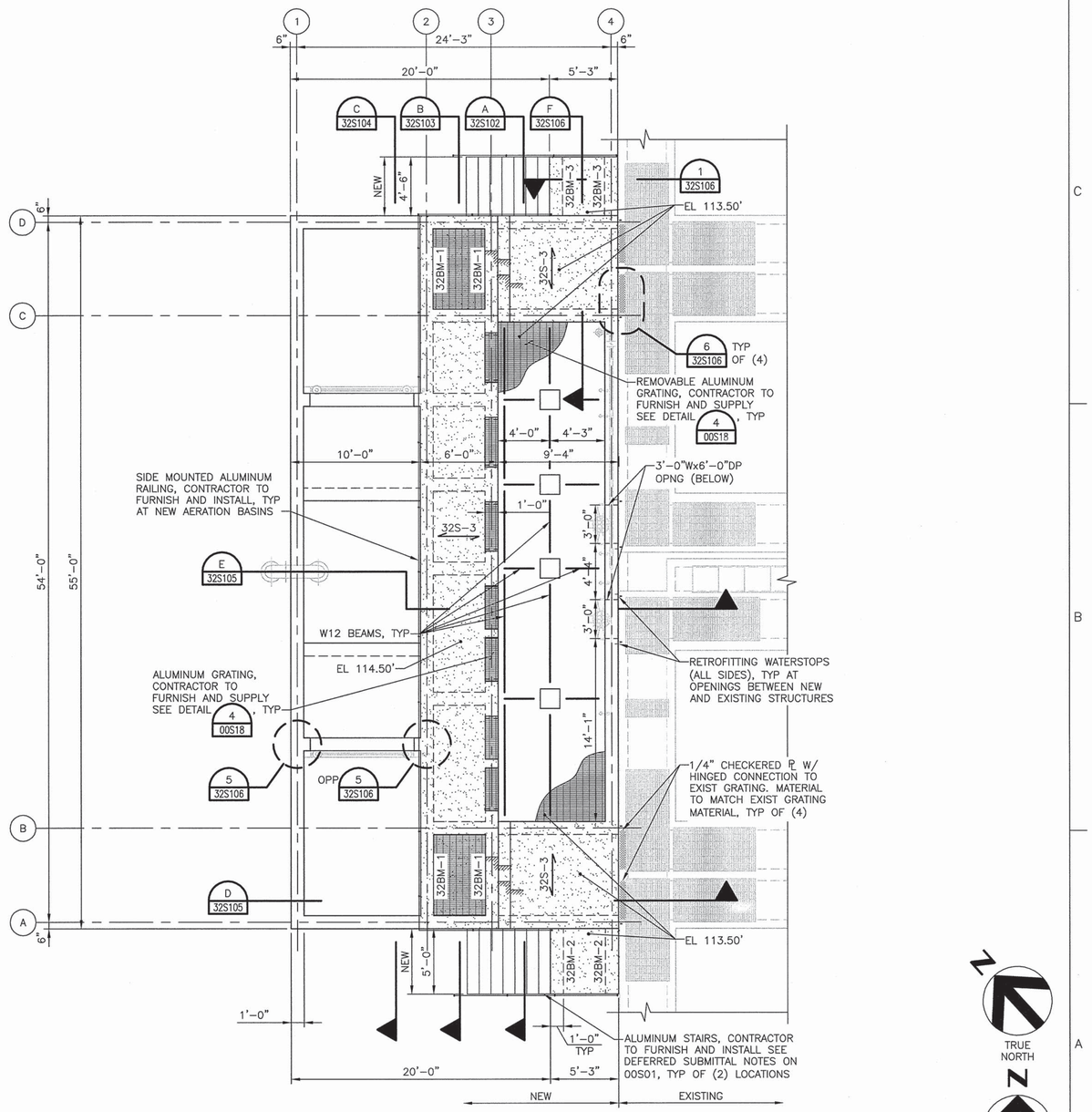


NOTE:
FOR NOTES AND INFORMATION NOT SHOWN, SEE S32S102.

## TOP PLAN
3/16" = 1'-0"

FILE: 215786-32S101.dwg
DATE: Jun 30, 2015-8:42:53am, jwebb

HDR Engineering, Inc.

| ISSUE | DATE | DESCRIPTION |
|---|---|---|
| A | JUNE 2015 | ISSUED FOR BID |

| | |
|---|---|
| PROJECT MANAGER | C. OLSON |
| DESIGNED | M MOSTAFA |
| DESIGNED | |
| CHECKED | O. TAVANGAR |
| DRAWN | D. ELDREDGE |
| DATE | JUNE 30, 2015 |
| PROJECT NUMBER | 215786 |

REGISTERED PROFESSIONAL ENGINEER MOHAMMADREZA MOSTAFA NO. 78649 EXP. 09/30/15 CIVIL STATE OF CALIFORNIA 06/30/15

CITY OF PINOLE CALIFORNIA 1903

PINOLE/HERCULES
WATER POLLUTION
CONTROL PLANT UPGRADE
CLIENT PN

**STRUCTURAL**

**PRIMARY EFFLUENT AND MIXED LIQUOR FLOW SPLIT BOX PLANS**

0 1" 2"

| FILENAME | 215786-32S101 |
|---|---|
| SCALE | AS NOTED |

SHEET 32S101

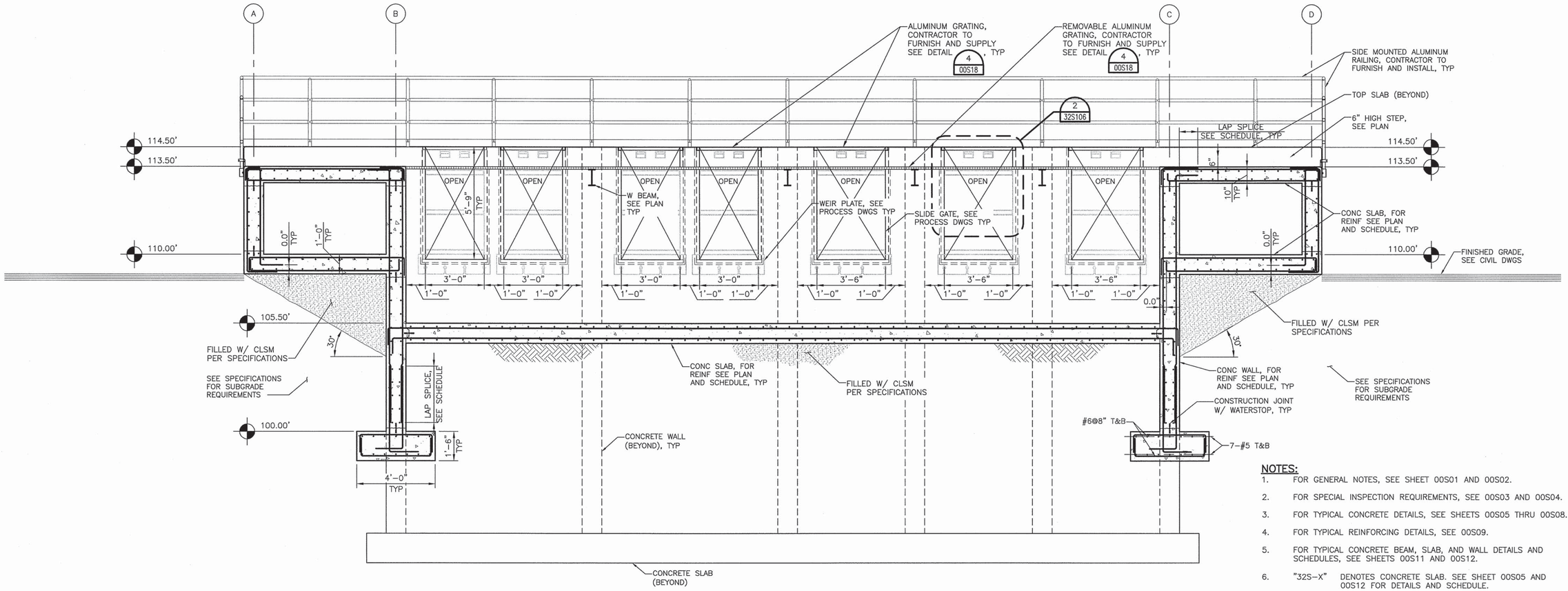


## SECTION

SCALE: 3/8"=1'-0"

A 32S101

## NOTES:

1. FOR GENERAL NOTES, SEE SHEET 00S01 AND 00S02.
2. FOR SPECIAL INSPECTION REQUIREMENTS, SEE 00S03 AND 00S04.
3. FOR TYPICAL CONCRETE DETAILS, SEE SHEETS 00S05 THRU 00S08.
4. FOR TYPICAL REINFORCING DETAILS, SEE 00S09.
5. FOR TYPICAL CONCRETE BEAM, SLAB, AND WALL DETAILS AND SCHEDULES, SEE SHEETS 00S11 AND 00S12.
6. "32S-X" DENOTES CONCRETE SLAB. SEE SHEET 00S05 AND 00S12 FOR DETAILS AND SCHEDULE.
7. "32W-X" DENOTES CONCRETE WALL. SEE SHEET 00S11 FOR WALL REINFORCING SCHEDULE.
8. ALL COLUMNS, WALLS, PILES, AND PILECAPS ARE CENTERED ON GRID LINES, UNLESS NOTED OTHERWISE.
9. CONTRACTOR TO VERIFY SIZES AND LOCATIONS OF ALL OPENINGS WITH PROCESS DRAWINGS. ALL DIMENSIONS ARE FOR ROUGH OPENINGS.
10. FOR ALL SLIDE AND STOP GATE LOCATIONS SEE PROCESS DRAWINGS. CONTRACTOR TO COORDINATE GATE GUIDE DETAILS, SIZE AND ANCHORAGE WITH MANUFACTURER.
11. FOR WEIR PLATE LOCATIONS AND DETAILS SEE PROCESS DRAWINGS.
12. FOR PIPE SIZES, ORIENTATION AND LOCATIONS SEE PROCESS DRAWINGS.
13. WALLS ALONG GRIDS 2, 3 AND WALL TYPE "32W-2" SHALL BE POURED AND SET PRIOR TO BACKFILLING AND POURING SLAB "32S-1".
14. "32C-X" DENOTES CONCRETE COLUMN. SEE SHEET 00S08 FOR COLUMN REINFORCING SCHEDULE.
15. FOR PRV NUMBERS, SIZES AND LOCATIONS, SEE PROCESS DRAWINGS.

FILE: 215786-32S102.dwg
DATE: Jun 30, 2015-8:42:59am, jwebb

HDR Engineering, Inc.

| ISSUE | DATE | DESCRIPTION |
|---|---|---|
| A | JUNE 2015 | ISSUED FOR BID |

| | |
|---|---|
| PROJECT MANAGER | C. OLSON |
| | |
| DESIGNED | M. MOSTAFA |
| DESIGNED | |
| CHECKED | C. OLSON |
| DRAWN | D. ELDREDGE |
| DATE | JUNE 30, 2015 |
| | |
| PROJECT NUMBER | 215786 |

REGISTERED PROFESSIONAL ENGINEER MOHAMMADREZA MOSTAFA NO. 78649 EXP. 09/30/15 CIVIL STATE OF CALIFORNIA 06/30/15

CITY OF PINOLE CALIFORNIA 1903

PINOLE/HERCULES WATER POLLUTION CONTROL PLANT UPGRADE CLIENT PN

**STRUCTURAL**

**PRIMARY EFFLUENT AND MIXED LIQUOR FLOW SPLIT BOX SECTIONS - I**

0 1" 2"

| | |
|---|---|
| FILENAME | 215786-32S102 |
| SCALE | AS NOTED |

SHEET 32S102

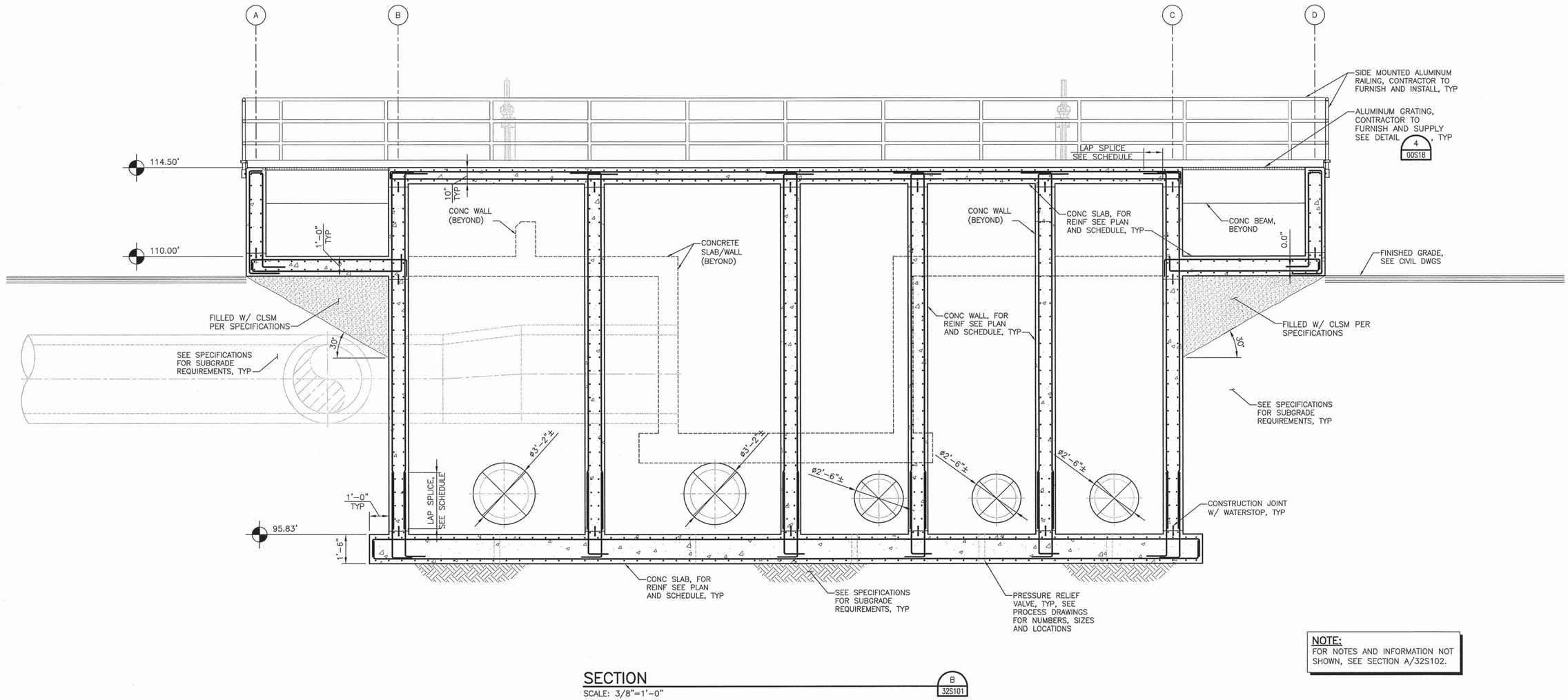


## SECTION

SCALE: 3/8"=1'-0"

B 32S101

**NOTE:**
FOR NOTES AND INFORMATION NOT SHOWN, SEE SECTION A/32S102.

FILE: 215786-32S103.dwg
DATE: Jun 30, 2015-8:43:09am, jwebb

HDR Engineering, Inc.

| ISSUE | DATE | DESCRIPTION |
|---|---|---|
| A | JUNE 2015 | ISSUED FOR BID |

| | |
|---|---|
| PROJECT MANAGER | C. OLSON |
| DESIGNED | M. MOSTAFA |
| DESIGNED | |
| CHECKED | C. OLSON |
| DRAWN | D. ELDREDGE |
| DATE | JUNE 30, 2015 |
| PROJECT NUMBER | 215786 |

REGISTERED PROFESSIONAL ENGINEER MOHAMMADREZA MOSTAFA NO. 78649 EXP. 09/30/15 CIVIL STATE OF CALIFORNIA 06/30/15

CITY OF PINOLE CALIFORNIA 1903

PINOLE/HERCULES
WATER POLLUTION
CONTROL PLANT UPGRADE
CLIENT PN

**STRUCTURAL**

**PRIMARY EFFLUENT AND MIXED LIQUOR FLOW SPLIT BOX SECTIONS - II**

0 1" 2"

| FILENAME | 215786-32S103 |
|---|---|
| SCALE | AS NOTED |

SHEET 32S103

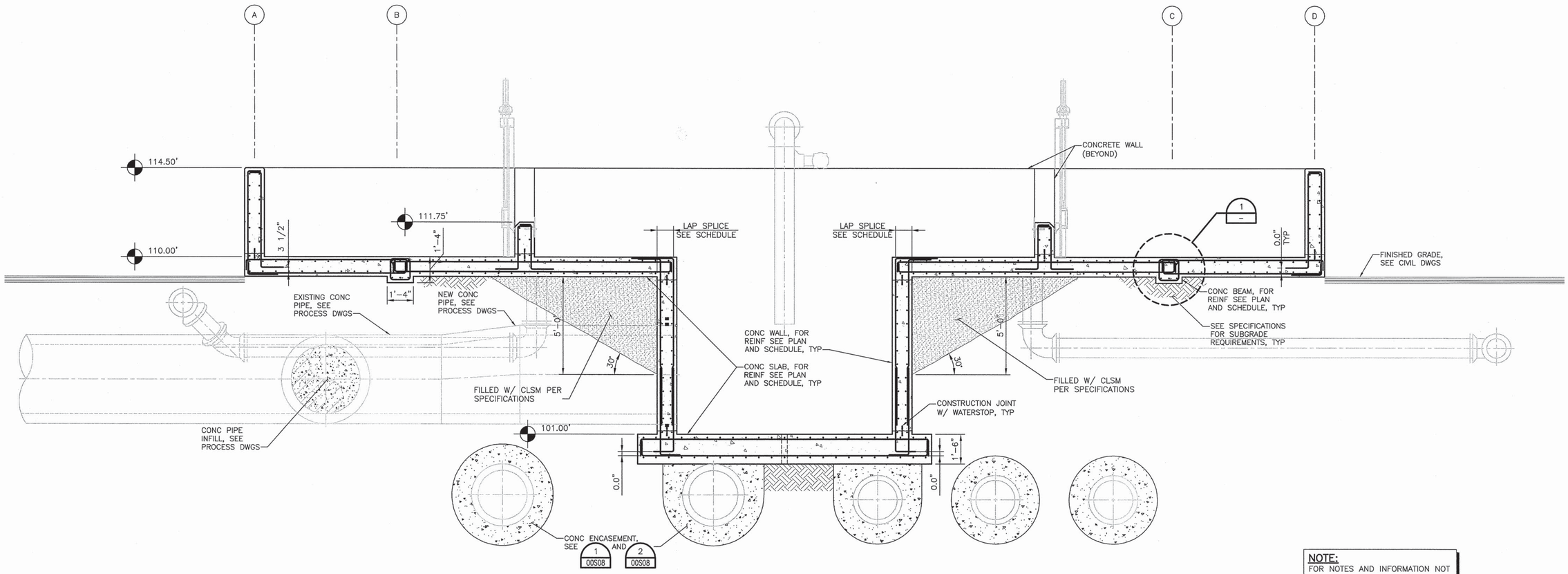


## SECTION

SCALE: 3/8"=1'-0"

C / 32S101

**NOTE:**
FOR NOTES AND INFORMATION NOT SHOWN, SEE SECTION A/32S102.

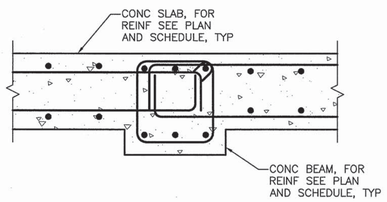


## DETAIL

SCALE: 3/8"=1'-0"

1 / –

FILE: 215786-32S104.dwg
DATE: Jun 30, 2015-8:43:16am, jwebb

HDR Engineering, Inc.

| ISSUE | DATE | DESCRIPTION |
|---|---|---|
| A | JUNE 2015 | ISSUED FOR BID |

| | |
|---|---|
| PROJECT MANAGER | C. OLSON |
| | |
| DESIGNED | M. MOSTAFA |
| DESIGNED | |
| CHECKED | C. OLSON |
| DRAWN | D. ELDREDGE |
| DATE | JUNE 30, 2015 |
| | |
| PROJECT NUMBER | 215786 |

REGISTERED PROFESSIONAL ENGINEER
MOHAMMADREZA MOSTAFA
NO. 78649
EXP. 09/30/15
CIVIL
STATE OF CALIFORNIA
06/30/15

CITY OF PINOLE CALIFORNIA 1903

PINOLE/HERCULES
WATER POLLUTION
CONTROL PLANT UPGRADE
CLIENT PN

**STRUCTURAL**

**PRIMARY EFFLUENT AND MIXED LIQUOR FLOW SPLIT BOX SECTIONS - III**

0 1" 2"

| | |
|---|---|
| FILENAME | 215786-32S104 |
| SCALE | AS NOTED |

SHEET **32S104**

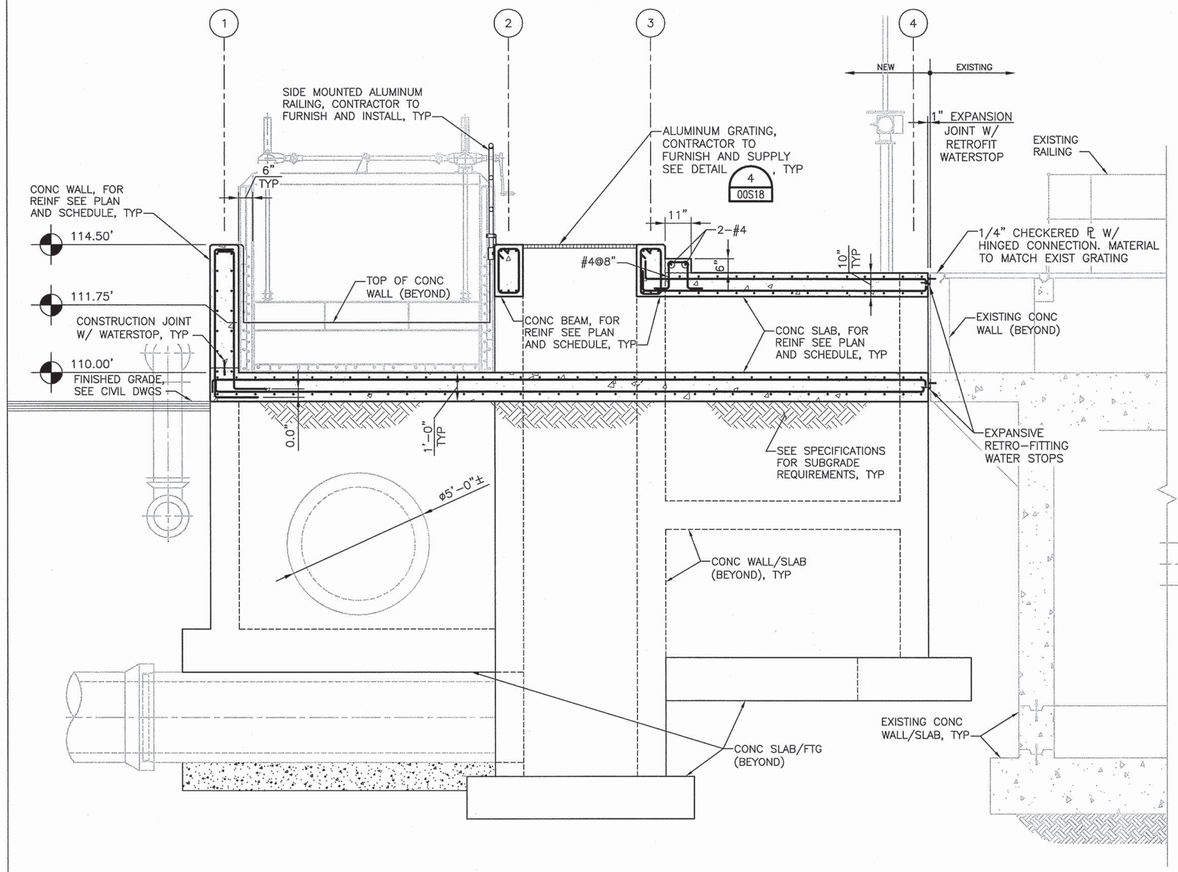


NOTE:
FOR NOTES AND INFORMATION NOT SHOWN, SEE SECTION A/32S102.

## SECTION
SCALE: 3/8"=1'-0"

D / 32S101

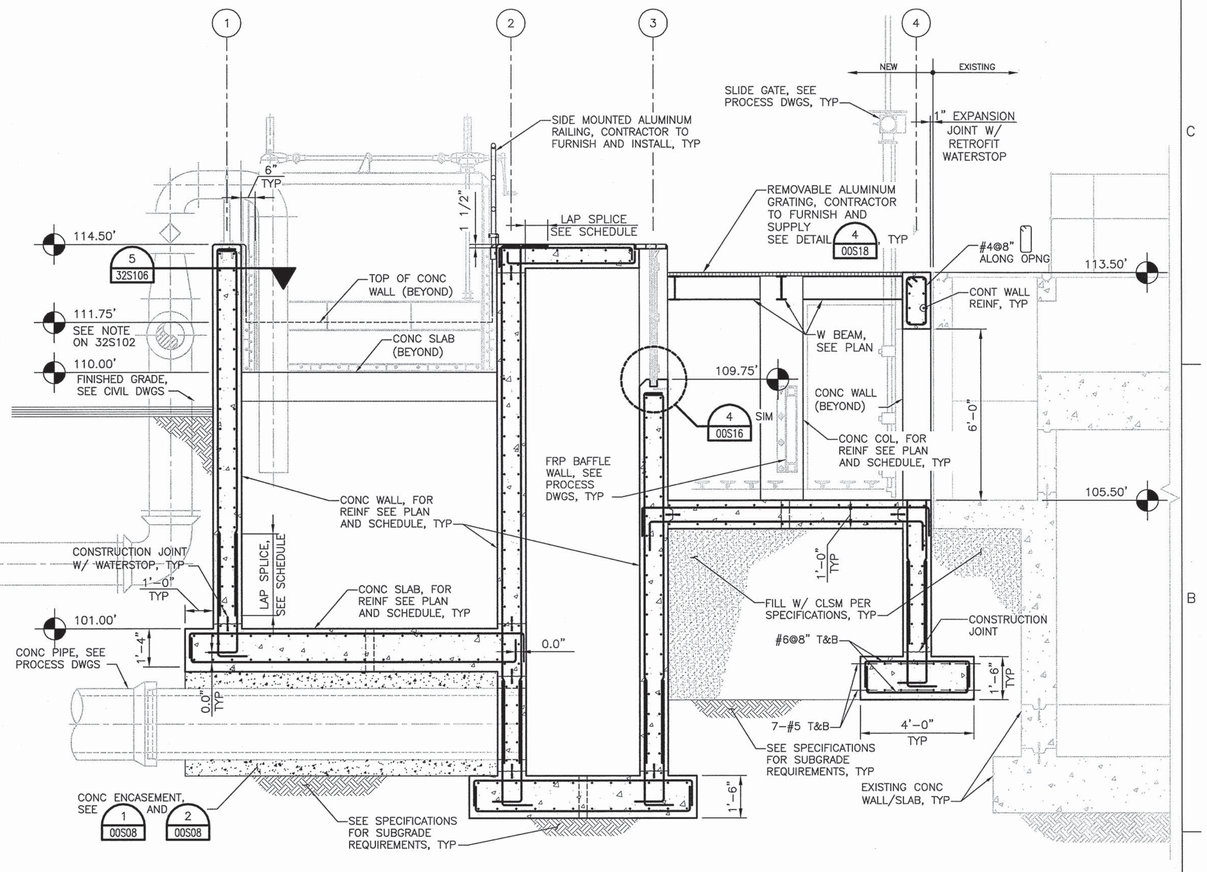


NOTE:
FOR NOTES AND INFORMATION NOT SHOWN, SEE SECTION A/32S102.

## SECTION
SCALE: 3/8"=1'-0"

E / 32S101

FILE: 215786-32S105.dwg
DATE: Jun 30, 2015-8:43:25am, jwebb

HDR Engineering, Inc.

| ISSUE | DATE | DESCRIPTION |
|---|---|---|
| | | |
| | | |
| | | |
| | | |
| | | |
| | | |
| A | JUNE 2015 | ISSUED FOR BID |

| | |
|---|---|
| PROJECT MANAGER | C. OLSON |
| | |
| DESIGNED | M. MOSTAFA |
| DESIGNED | |
| CHECKED | C. OLSON |
| DRAWN | D. ELDREDGE |
| DATE | JUNE 30, 2015 |
| | |
| PROJECT NUMBER | 215786 |

REGISTERED PROFESSIONAL ENGINEER MOHAMMADREZA MOSTAFA NO. 78649 EXP. 09/30/15 CIVIL STATE OF CALIFORNIA
6/30/15

CITY OF PINOLE CALIFORNIA 1903

PINOLE/HERCULES
WATER POLLUTION
CONTROL PLANT UPGRADE
CLIENT PN

**STRUCTURAL**

**PRIMARY EFFLUENT AND MIXED LIQUOR FLOW SPLIT BOX SECTIONS - IV**

0 1" 2"

| | |
|---|---|
| FILENAME | 215786-32S105 |
| SCALE | AS NOTED |

SHEET 32S105

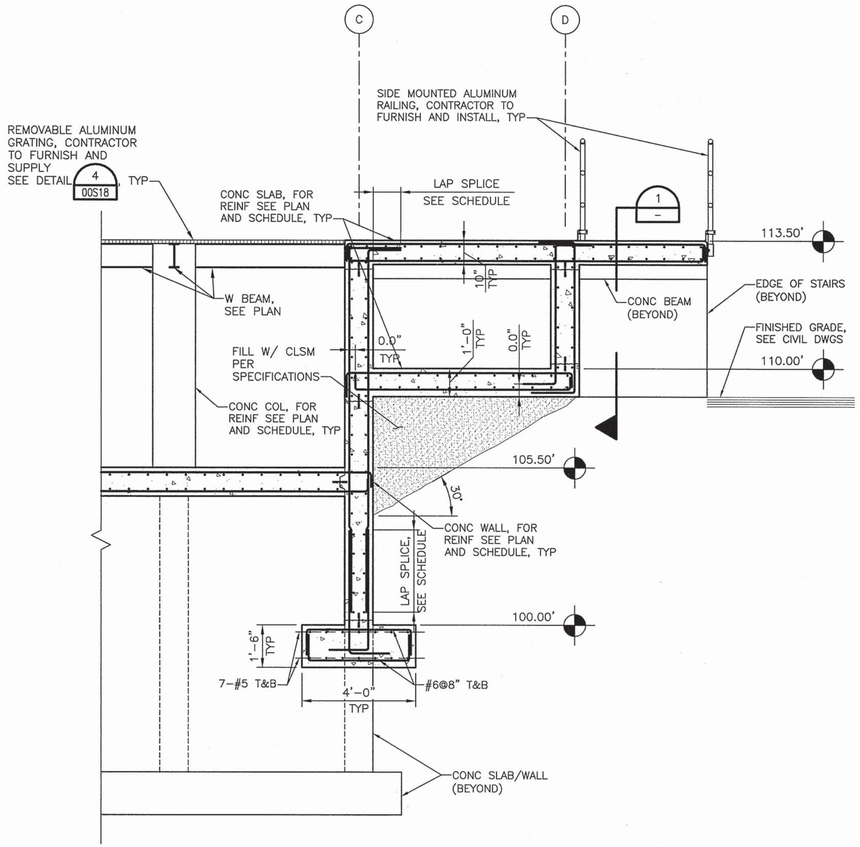


## SECTION
SCALE: 3/8"=1'-0"
F 32S101

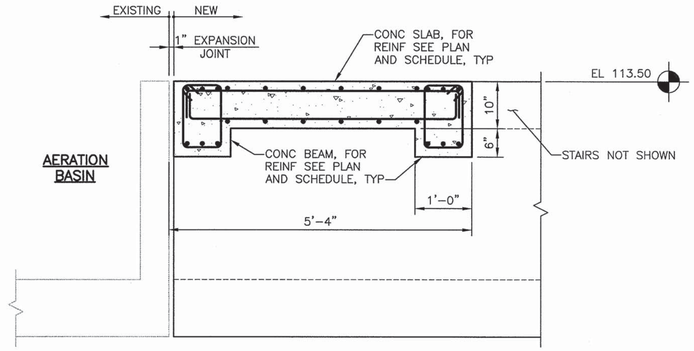


## SECTION
SCALE: 3/4"=1'-0"
1 32S101

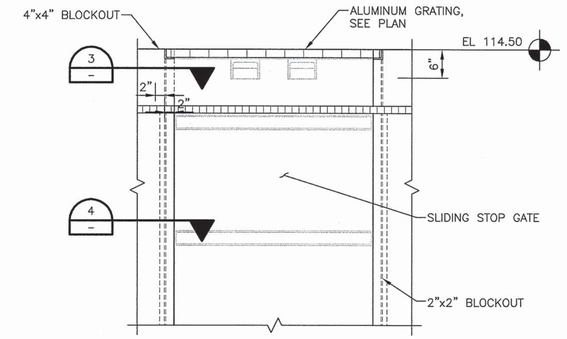


## SECTION
SCALE: 3/4"=1'-0"
2 32S102

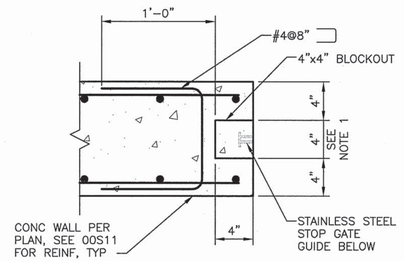


## DETAIL
SCALE: 1 1/2"=1'-0"
3 –

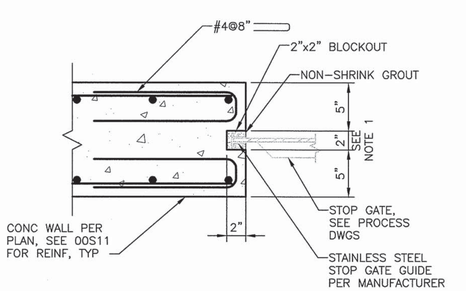


## DETAIL
SCALE: 1 1/2"=1'-0"
4 –

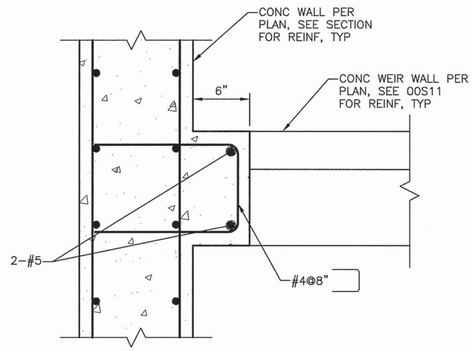


## DETAIL – PLAN VIEW
SCALE: 1 1/2"=1'-0"
5 32S101

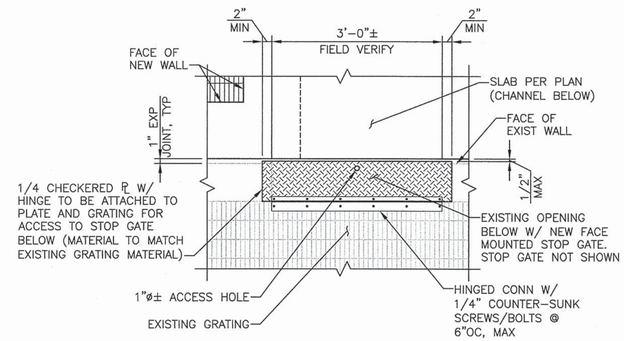


## DETAIL – PLAN VIEW
SCALE: 3/4"=1'-0"
6 32S101

**NOTES:**
1. CONTRACTOR TO VERIFY SIZE AND LOCATIONS OF BLOCK OUTS WITH SLIDE GATE MANUFACTURER.
2. SEE NOTES ON 32S102 FOR INFORMATION NOTE SHOWN.

**NOTE:**
CONTRACTOR TO FURNISH AND INSTALL CHECKERED PLATE AND HINGE SYSTEM TO PROVIDE MEANS OF ATTACHMENT FROM EXISTING GRATING TO NEW CHECKERED PLATING.

FILE: 215786-32S106.dwg
DATE: Jun 30, 2015-8:43:35am, jwebb

HDR Engineering, Inc.

| ISSUE | DATE | DESCRIPTION |
|---|---|---|
| A | JUNE 2015 | ISSUED FOR BID |

| | |
|---|---|
| PROJECT MANAGER | C. OLSON |
| DESIGNED | M. MOSTAFA |
| DESIGNED | |
| CHECKED | C. OLSON |
| DRAWN | D. ELDREDGE |
| DATE | JUNE 30, 2015 |
| PROJECT NUMBER | 215786 |

REGISTERED PROFESSIONAL ENGINEER MOHAMMADREZA MOSTAFA NO. 78649 EXP. 09/30/15 CIVIL STATE OF CALIFORNIA 06/30/15

CITY OF PINOLE CALIFORNIA 1903

PINOLE/HERCULES
WATER POLLUTION
CONTROL PLANT UPGRADE
CLIENT PN

**STRUCTURAL**

**PRIMARY EFFLUENT AND MIXED LIQUOR FLOW SPLIT BOX SECTIONS AND DETAILS**

0 1" 2"

| | |
|---|---|
| FILENAME | 215786-32S106 |
| SCALE | AS NOTED |

SHEET 32S106

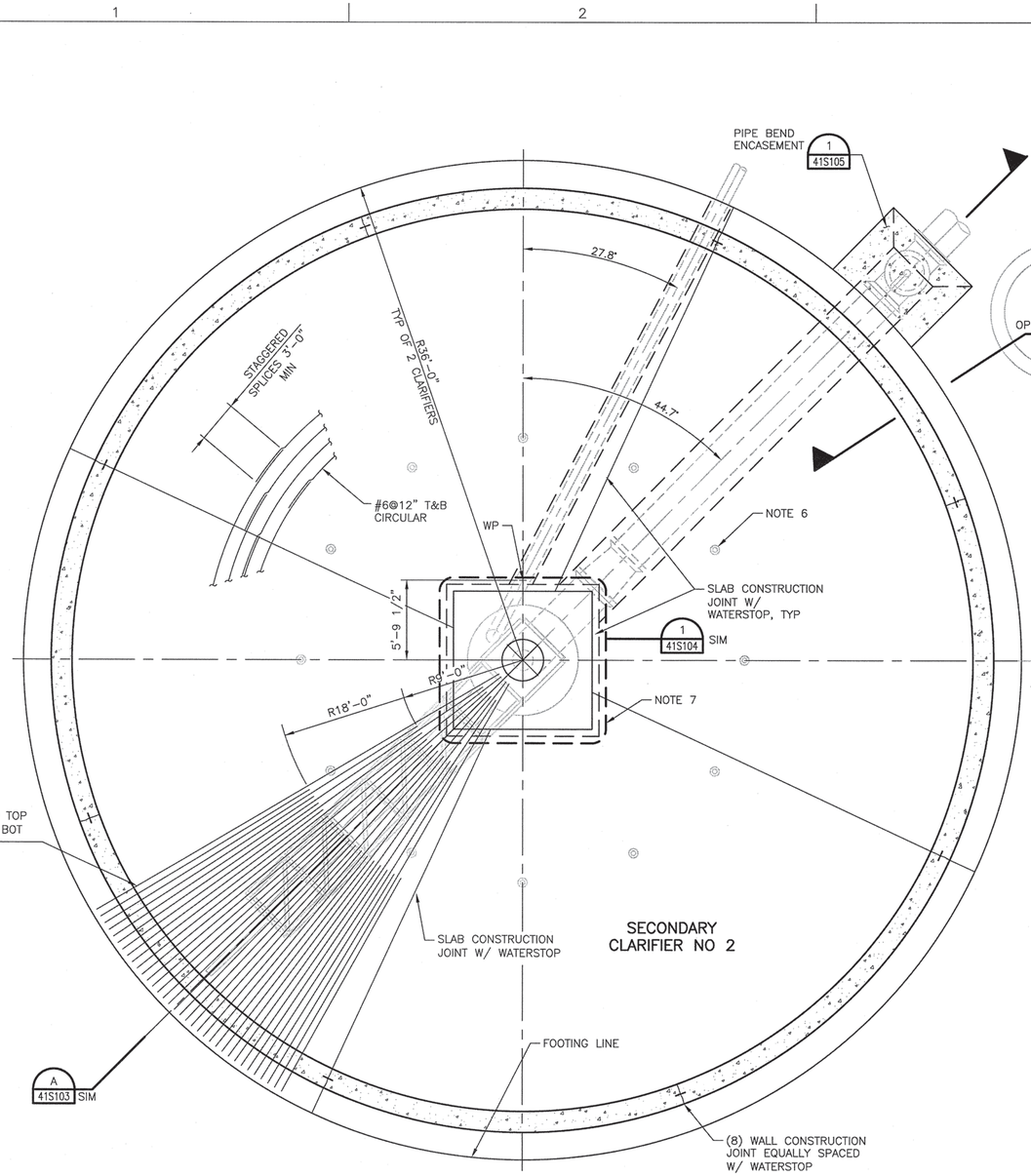


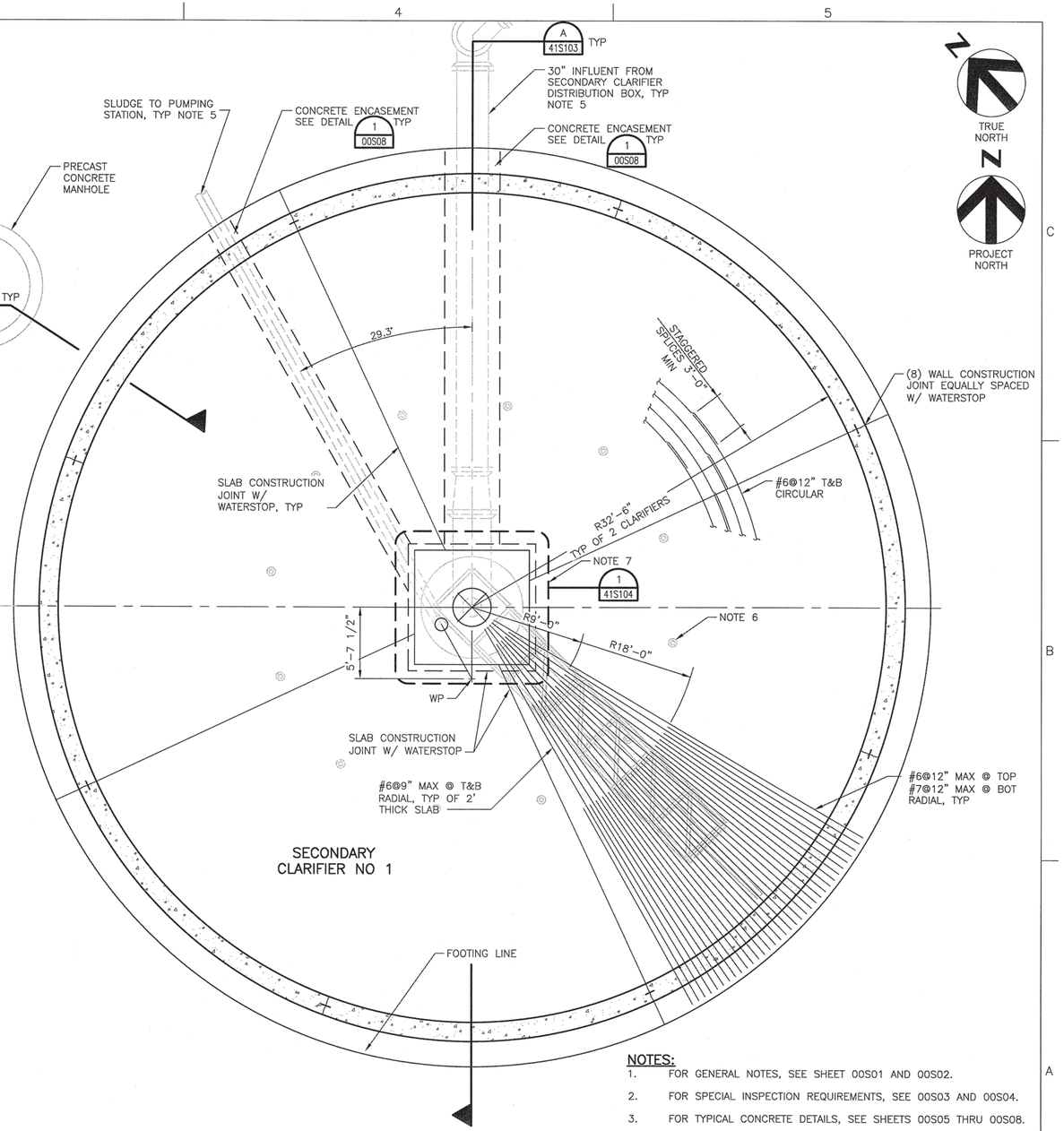





## SECONDARY CLARIFIERS–FOUNDATION PLAN

SCALE: 3/16" = 1'–0"

NOTES:

1. FOR GENERAL NOTES, SEE SHEET 00S01 AND 00S02.
2. FOR SPECIAL INSPECTION REQUIREMENTS, SEE 00S03 AND 00S04.
3. FOR TYPICAL CONCRETE DETAILS, SEE SHEETS 00S05 THRU 00S08.
4. FOR TYPICAL REINFORCING DETAILS, SEE 00S09.
5. COORDINATE PIPING LOCATION, ORIENTATION, ELEVATIONS, AND CONCRETE PENETRATIONS WITH PROCESS/MECHANICAL DRAWINGS.
6. REFER TO PROCESS DRAWINGS FOR LOCATIONS AND NUMBER OF PRESSURE RELIEF VALVES.
7. PEDESTAL SIZE AND REINFORCEMENT ARE BASED ON MECHANISM INFORMATION AT PRE–DESIGN STAGE. CONSTRUCTOR SHALL PROVIDE ALL DESIGN LOADS AT PEDESTAL BASE FOR ENGINEER OF RECORD TO VERIFY PEDESTAL DESIGN BEFORE CONSTRUCTION.

FILE: 215786–41S101.dwg
DATE: Jun 29, 2015–8:15:45pm, zhli

HDR Engineering, Inc.

| ISSUE | DATE | DESCRIPTION |
|---|---|---|
| A | JUNE 2015 | ISSUED FOR BID |

| | |
|---|---|
| PROJECT MANAGER | C. OLSON |
| DESIGNED | Z. LI |
| DESIGNED | |
| CHECKED | O. TAVANGAR |
| DRAWN | D. ELDREDGE |
| DATE | JUNE 30, 2015 |
| PROJECT NUMBER | 215786 |

REGISTERED PROFESSIONAL ENGINEER
ZHEN LI
NO. 74809
EXP. 12/31/15
6/30/2015
CIVIL
STATE OF CALIFORNIA

CITY OF PINOLE CALIFORNIA 1903

PINOLE/HERCULES
WATER POLLUTION
CONTROL PLANT UPGRADE
CLIENT PN

**STRUCTURAL**

**SECONDARY CLARIFIERS NO 1 AND NO 2 FOUNDATION PLAN**

0 1" 2"

| | |
|---|---|
| FILENAME | 215786–41S101 |
| SCALE | AS NOTED |

SHEET **41S101**

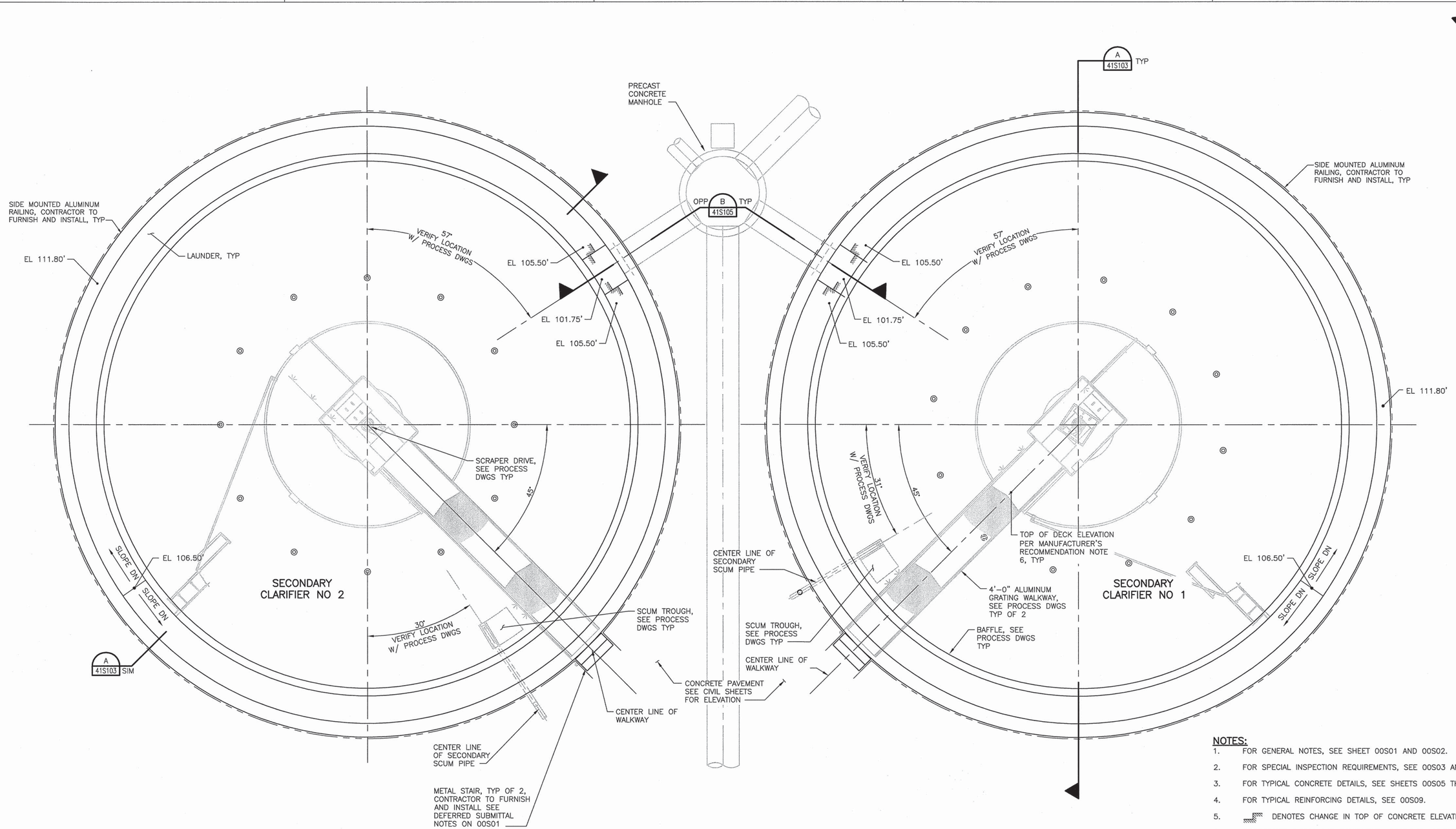


## SECONDARY CLARIFIERS–TOP PLAN

SCALE: 3/16" = 1'-0"

NOTES:

1. FOR GENERAL NOTES, SEE SHEET 00S01 AND 00S02.
2. FOR SPECIAL INSPECTION REQUIREMENTS, SEE 00S03 AND 00S04.
3. FOR TYPICAL CONCRETE DETAILS, SEE SHEETS 00S05 THRU 00S08.
4. FOR TYPICAL REINFORCING DETAILS, SEE 00S09.
5. DENOTES CHANGE IN TOP OF CONCRETE ELEVATION.
6. COORDINATE PIPING AND EQUIPMENT LOCATIONS, ORIENTATION, ELEVATIONS, AND CONCRETE PENETRATIONS WITH PROCESS/MECHANICAL DRAWINGS.
7. FOR TYPICAL RAILING DETAILS, SEE SHEET 00S19 THRU 00S20.

FILE: 215786-41S102.dwg
DATE: Jun 29, 2015-3:42:25pm, jwebb

HDR Engineering, Inc.

| ISSUE | DATE | DESCRIPTION |
|---|---|---|
| A | JUNE 2015 | ISSUED FOR BID |

| | |
|---|---|
| PROJECT MANAGER | C. OLSON |
| DESIGNED | Z. LI |
| DESIGNED | |
| CHECKED | O. TAVANGAR |
| DRAWN | D. ELDREDGE |
| DATE | JUNE 30, 2015 |
| PROJECT NUMBER | 215786 |

REGISTERED PROFESSIONAL ENGINEER
ZHEN LI
NO. 74809
EXP. 12/31/15
6/30/2015
CIVIL
STATE OF CALIFORNIA

CITY OF PINOLE CALIFORNIA 1903

PINOLE/HERCULES
WATER POLLUTION
CONTROL PLANT UPGRADE
CLIENT PN

**STRUCTURAL**

**SECONDARY CLARIFIERS NO 1 AND NO 2 TOP PLAN**

0 1" 2"

| | |
|---|---|
| FILENAME | 215786-41S102 |
| SCALE | AS NOTED |

SHEET **41S102**

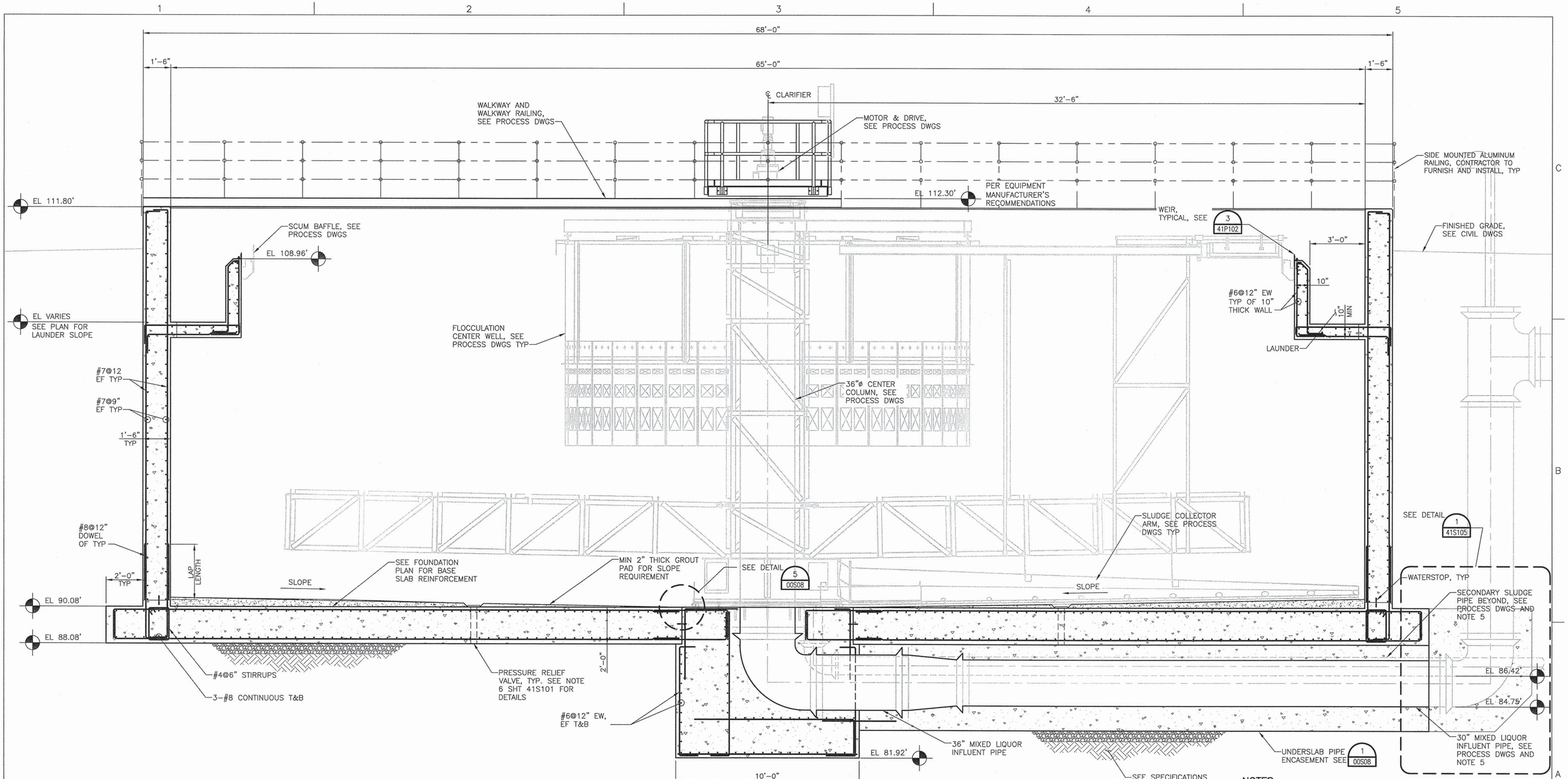


## SECTION

SCALE: 3/8"=1'-0"

A 41S101 41S102

**NOTES:**

1. FOR GENERAL NOTES, SEE SHEET 00S01 AND 00S02.
2. FOR SPECIAL INSPECTION REQUIREMENTS, SEE 00S03 AND 00S04.
3. FOR TYPICAL CONCRETE DETAILS, SEE SHEETS 00S05 THRU 00S08.
4. FOR TYPICAL REINFORCING DETAILS, SEE 00S09.
5. COORDINATE PIPING AND EQUIPMENT LOCATIONS, ORIENTATION, ELEVATIONS, AND CONCRETE PENETRATIONS WITH PROCESS/MECHANICAL DRAWINGS.
6. FOR TYPICAL RAILING DETAILS, SEE SHEET 00S19 THRU 00S20.

FILE: 215786-41S103.dwg
DATE: Jun 29, 2015-4:17:17pm, zhili

HDR Engineering, Inc.

| ISSUE | DATE | DESCRIPTION |
|---|---|---|
| A | JUNE 2015 | ISSUED FOR BID |

| | |
|---|---|
| PROJECT MANAGER | C. OLSON |
| | |
| DESIGNED | Z. LI |
| DESIGNED | |
| CHECKED | O. TAVANGAR |
| DRAWN | D. ELDREDGE |
| DATE | JUNE 30, 2015 |
| | |
| PROJECT NUMBER | 215786 |

REGISTERED PROFESSIONAL ENGINEER
ZHEN LI
NO. 74809
EXP. 12/31/15
6/30/2015
CIVIL
STATE OF CALIFORNIA

CITY OF PINOLE CALIFORNIA 1903

PINOLE/HERCULES
WATER POLLUTION
CONTROL PLANT UPGRADE
CLIENT PN

**STRUCTURAL**

**SECONDARY CLARIFIERS NO 1 AND NO 2 SECTION**

0 1" 2"

| | |
|---|---|
| FILENAME | 215786-41S103 |
| SCALE | AS NOTED |

SHEET **41S103**

TRUE NORTH

PROJECT NORTH

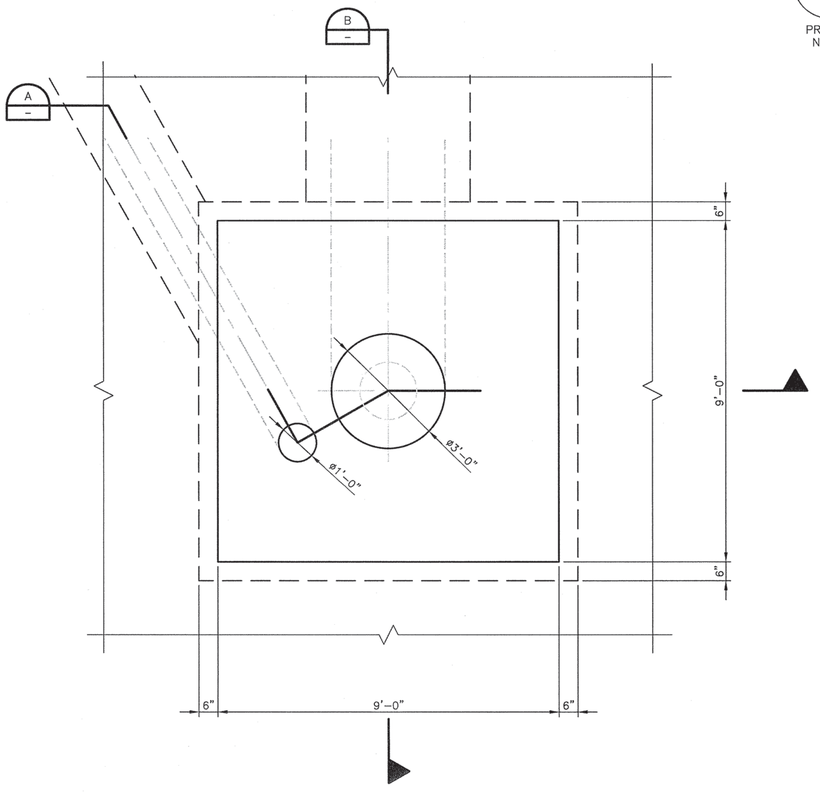


ENLARGED PLAN
1/2" = 1'-0"
1 / 41S101

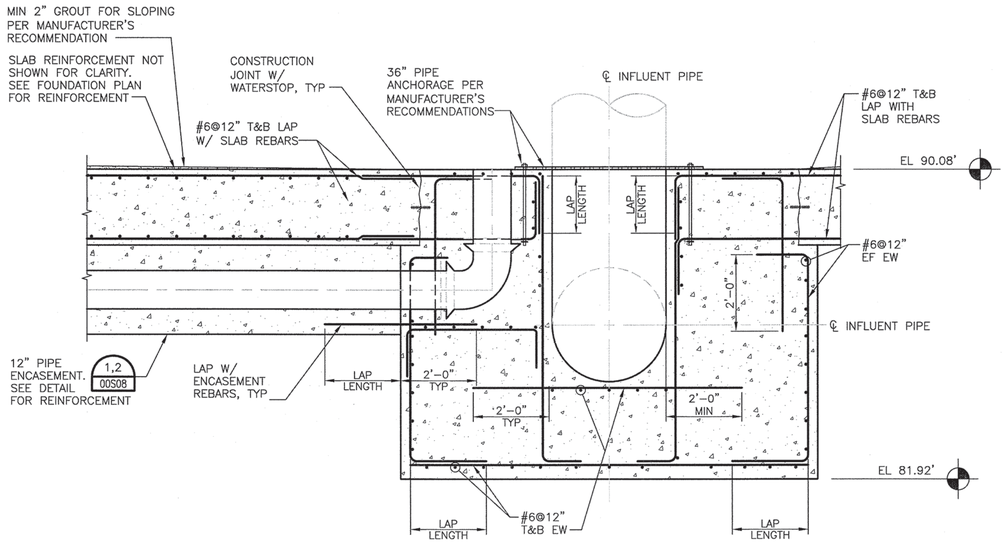


SECTION
1/2" = 1'-0"
A / –

NOTE: SEE SECTION A FOR ADDITIONAL INFORMATION NOT SHOWN HERE.

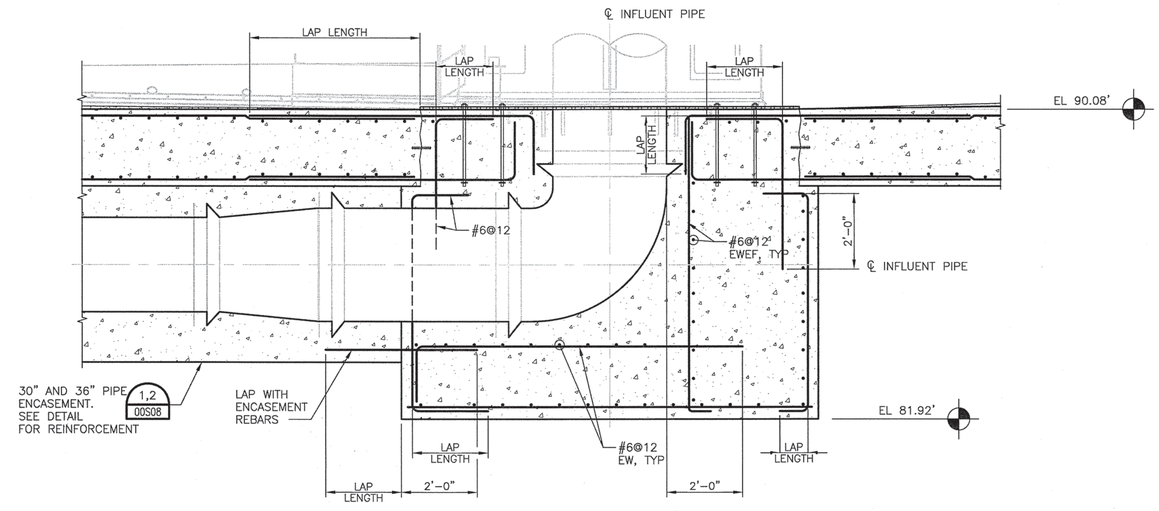


SECTION
1/2" = 1'-0"
B / –

FILE: 215786-41S104.dwg
DATE: Jun 29, 2015-8:46:37am, zhli

HDR Engineering, Inc.

| ISSUE | DATE | DESCRIPTION |
|---|---|---|
| A | JUNE 2015 | ISSUED FOR BID |

| | |
|---|---|
| PROJECT MANAGER | C. OLSON |
| | |
| DESIGNED | Z. LI |
| DESIGNED | |
| CHECKED | C. OLSON |
| DRAWN | D. ELDREDGE |
| DATE | JUNE 30, 2015 |
| | |
| PROJECT NUMBER | 215786 |

REGISTERED PROFESSIONAL ENGINEER
ZHEN LI
NO. 74809
EXP. 12/31/15
6/30/2015
CIVIL
STATE OF CALIFORNIA

CITY OF PINOLE CALIFORNIA 1903

PINOLE/HERCULES
WATER POLLUTION
CONTROL PLANT UPGRADE
CLIENT PN

**STRUCTURAL**

**SECONDARY CLARIFIERS NO 1 AND NO 2**
**ENLARGED PLAN AND SECTIONS**

0 1" 2"

| | |
|---|---|
| FILENAME | 215786-41S104 |
| SCALE | AS NOTED |

SHEET
**41S104**

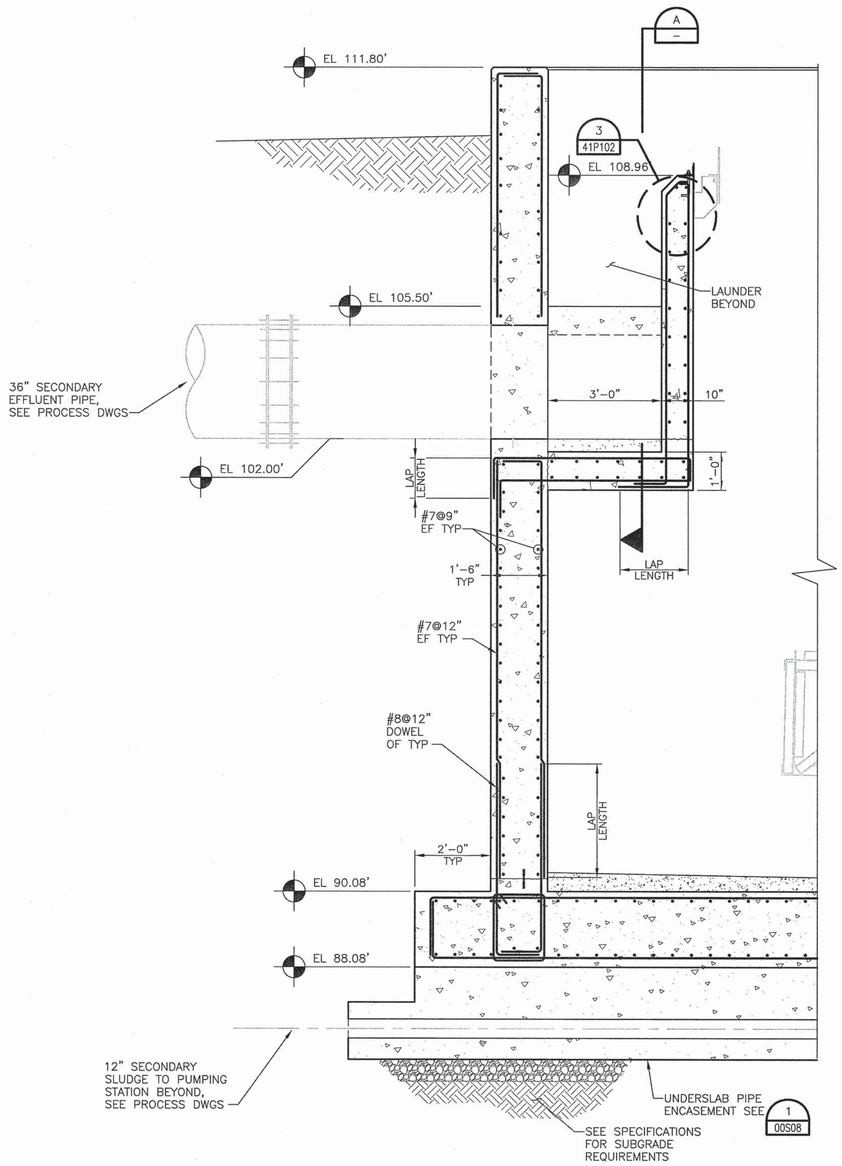


## SECTION
SCALE: 1/2"=1'-0"

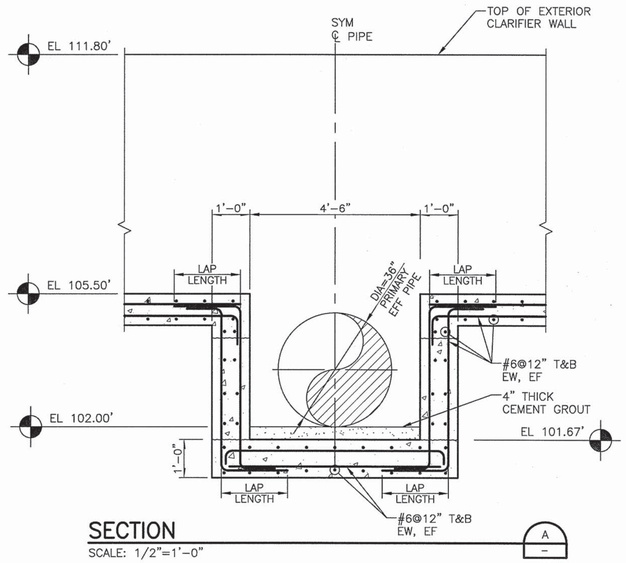


## SECTION
SCALE: 1/2" = 1'-0"

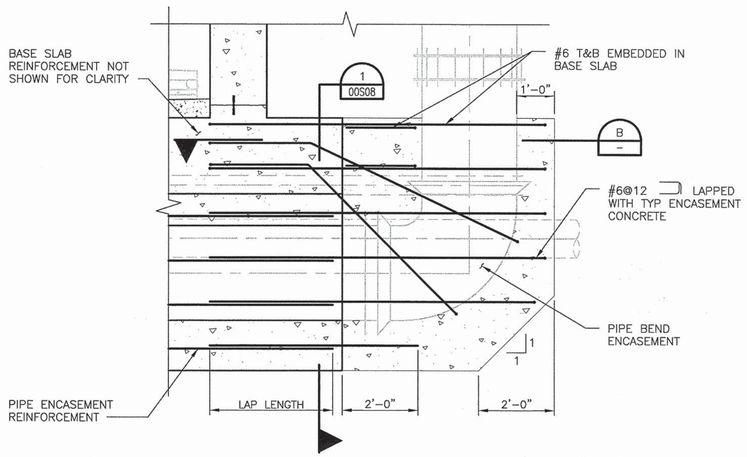


## PIPE BEND ENCASEMENT
SCALE: 1/2"=1'-0"

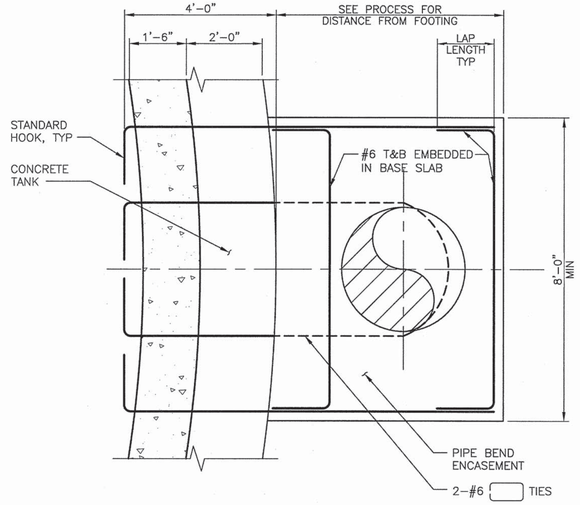


## SECTION
SCALE: 1/2"=1'-0"

FILE: 215786-41S105.dwg
DATE: Jun 29, 2015-8:54:57pm, zhli

HDR Engineering, Inc.

| ISSUE | DATE | DESCRIPTION |
|---|---|---|
| A | JUNE 2015 | ISSUED FOR BID |

| | |
|---|---|
| PROJECT MANAGER | C. OLSON |
| | |
| DESIGNED | Z. LI |
| DESIGNED | |
| CHECKED | O. TAVANGAR |
| DRAWN | D. ELDREDGE |
| DATE | JUNE 30, 2015 |
| | |
| PROJECT NUMBER | 215786 |

REGISTERED PROFESSIONAL ENGINEER
ZHEN LI
NO. 74809
EXP. 12/31/15
6/30/2015
CIVIL
STATE OF CALIFORNIA

CITY OF PINOLE CALIFORNIA 1903

PINOLE/HERCULES WATER POLLUTION CONTROL PLANT UPGRADE
CLIENT PN

**STRUCTURAL**

**SECONDARY CLARIFIERS NO 1 AND NO 2 SECTIONS**

0 1" 2"

| | |
|---|---|
| FILENAME | 215786-41S105 |
| SCALE | AS NOTED |

SHEET **41S105**

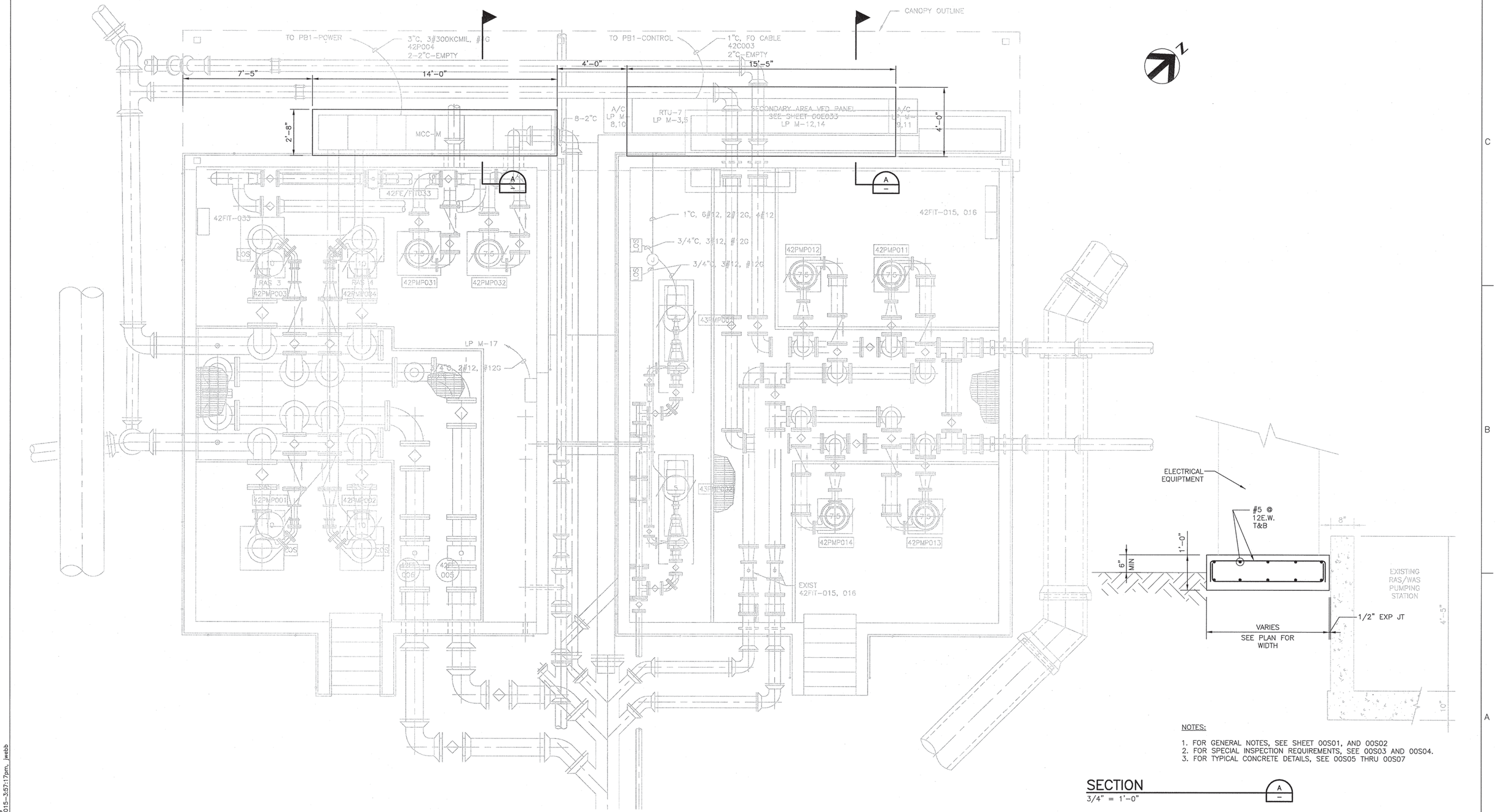


NOTES:

1. FOR GENERAL NOTES, SEE SHEET 00S01, AND 00S02
2. FOR SPECIAL INSPECTION REQUIREMENTS, SEE 00S03 AND 00S04.
3. FOR TYPICAL CONCRETE DETAILS, SEE 00S05 THRU 00S07

SECTION
3/4" = 1'-0"

ELECTRICAL PADS PLAN
3/8" = 1'-0"

FILE: 42S101.dwg
DATE: Jun 29, 2015-3:57:17pm, jwebb

HDR Engineering, Inc.

| ISSUE | DATE | DESCRIPTION |
|---|---|---|
| A | JUNE 2015 | ISSUED FOR BID |

| | |
|---|---|
| PROJECT MANAGER | C. OLSON |
| | |
| DESIGNED | Z.LI |
| DESIGNED | |
| CHECKED | O.TAVANGAR |
| DRAWN | S.LARI |
| DATE | JUNE 30, 2015 |
| | |
| PROJECT NUMBER | 215786 |

REGISTERED PROFESSIONAL ENGINEER
ZHEN LI
NO. 74809
EXP. 12/31/15
6/30/2015
CIVIL
STATE OF CALIFORNIA

CITY OF PINOLE CALIFORNIA 1903

PINOLE/HERCULES
WATER POLLUTION
CONTROL PLANT UPGRADE
CLIENT PN

**STRUCTURAL**

**EXISTING RAS/WAS PUMPING STATIONS**
**ELECTRICAL PADS PLAN AND SECTION**

0 1" 2"

| | |
|---|---|
| FILENAME | 42S101 |
| SCALE | 3/8"=1'-0" |

SHEET
**42S101**

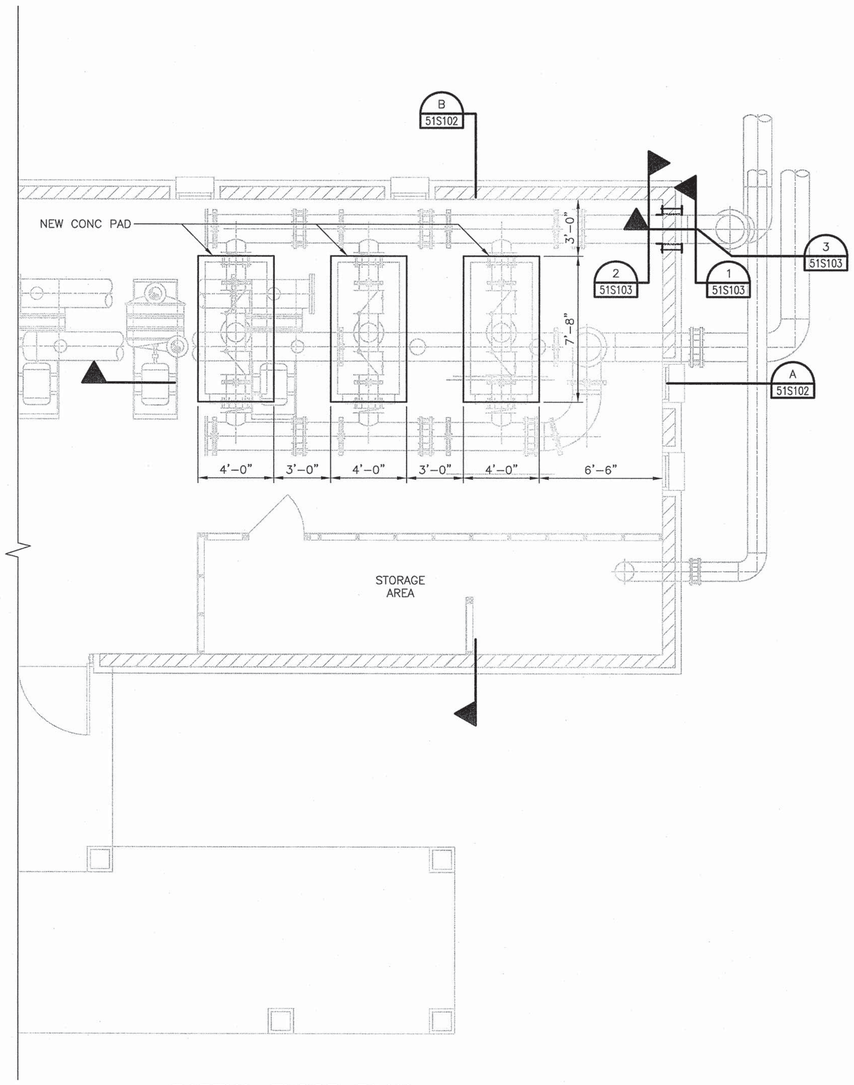


## PARTIAL FLOOR PLAN

SCALE 1/4" = 1'-0"

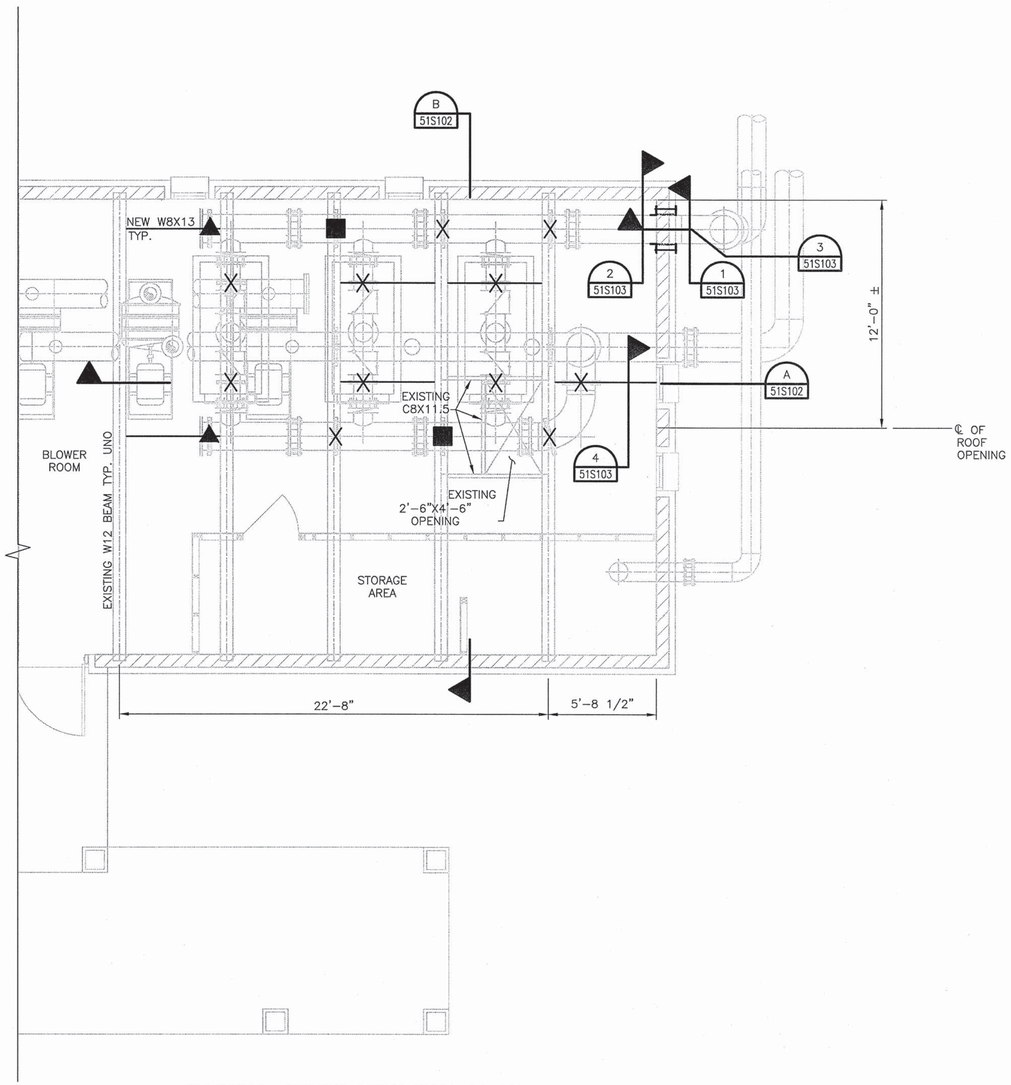


## PARTIAL ROOF FRAMING PLAN

SCALE 1/4" = 1'-0"

**NOTES:**

1. FOR GENERAL NOTES, SEE SHEET 00S01 AND 00S02.
2. FOR DEMOLITION INFORMATION, SEE 51D101 AND 51D102.
3. FOR TYPICAL CONCRETE DETAILS, SEE SHEETS 00S05 THRU 00S08.
4. FOR TYPICAL REINFORCING DETAILS, SEE 00S09.
5. FOR TYPICAL STEEL DETAILS, SEE SHEET 00S14 THROUGH 00S16.
6. FOR TYPICAL STEEL BEAM/GIRDER CONNECTIONS SEE 9/00S14.
7. X DENOTES PIPE SUPPORT, GRAVITY ONLY, 11 IN TOTAL.
8. ▲ DENOTES PIPE SUPPORT, GRAVITY AND SEISMIC BRACING IN PIPE LONGITUDINAL DIRECTION, 2 IN TOTAL.
9. ■ DENOTES PIPE SUPPORT, GRAVITY AND SEISMIC BRACING IN PIPE TRANSVERSE DIRECTION, 2 IN TOTAL.
10. FOR TYPICAL PIPE SUPPORT AND SEISMIC BRACING DETAILS, SEE MECHANICAL DRAWINGS.
11. LOCATE NEW W8 BEAMS SO THAT THEY ARE CENTERLINED WITH PIPE SUPPORTS.

FILE: 51S101.dwg
DATE: Jun 29, 2015--7:59:22pm, zhli

HDR Engineering, Inc.

| ISSUE | DATE | DESCRIPTION |
|---|---|---|
| A | JUNE 2015 | ISSUED FOR BID |

| | |
|---|---|
| PROJECT MANAGER | C. OLSON |
| | |
| DESIGNED | Z. LI |
| DESIGNED | |
| CHECKED | O. TAVANGAR |
| DRAWN | D. ELDREDGE |
| DATE | JUNE 30, 2015 |
| | |
| PROJECT NUMBER | 215786 |

REGISTERED PROFESSIONAL ENGINEER
ZHEN LI
NO. 74809
EXP. 12/31/15
6/30/2015
CIVIL
STATE OF CALIFORNIA

CITY OF PINOLE CALIFORNIA 1903

PINOLE/HERCULES
WATER POLLUTION
CONTROL PLANT UPGRADE
CLIENT PN

**STRUCTURAL**

**BLOWER BUILDING**
**PARTIAL FLOOR PLAN & ROOF FRAMING PLAN**

0 1" 2"

| | |
|---|---|
| FILENAME | 51S101 |
| SCALE | AS NOTED |

SHEET
**51S101**

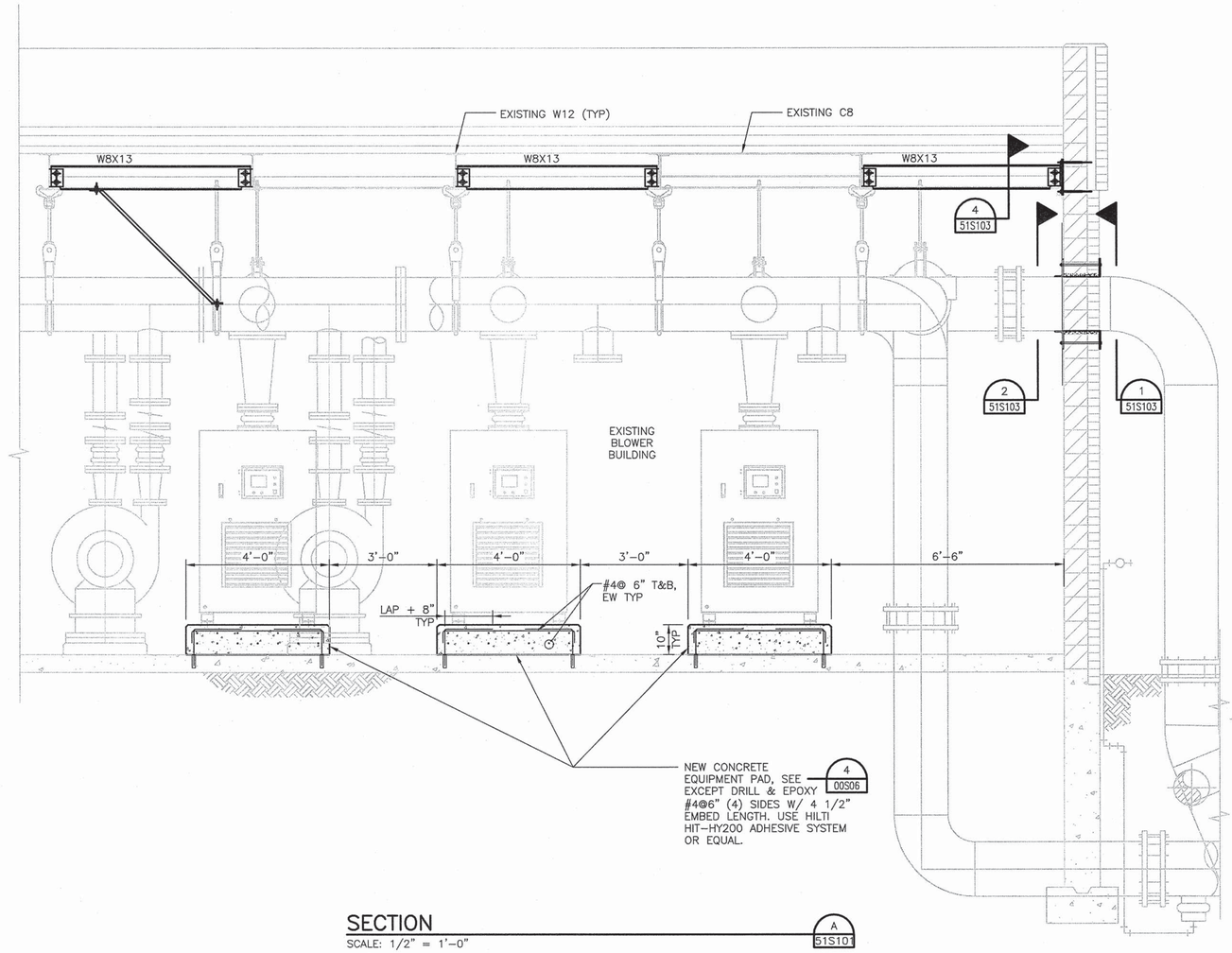


SECTION
SCALE: 1/2" = 1'-0"
A
51S101

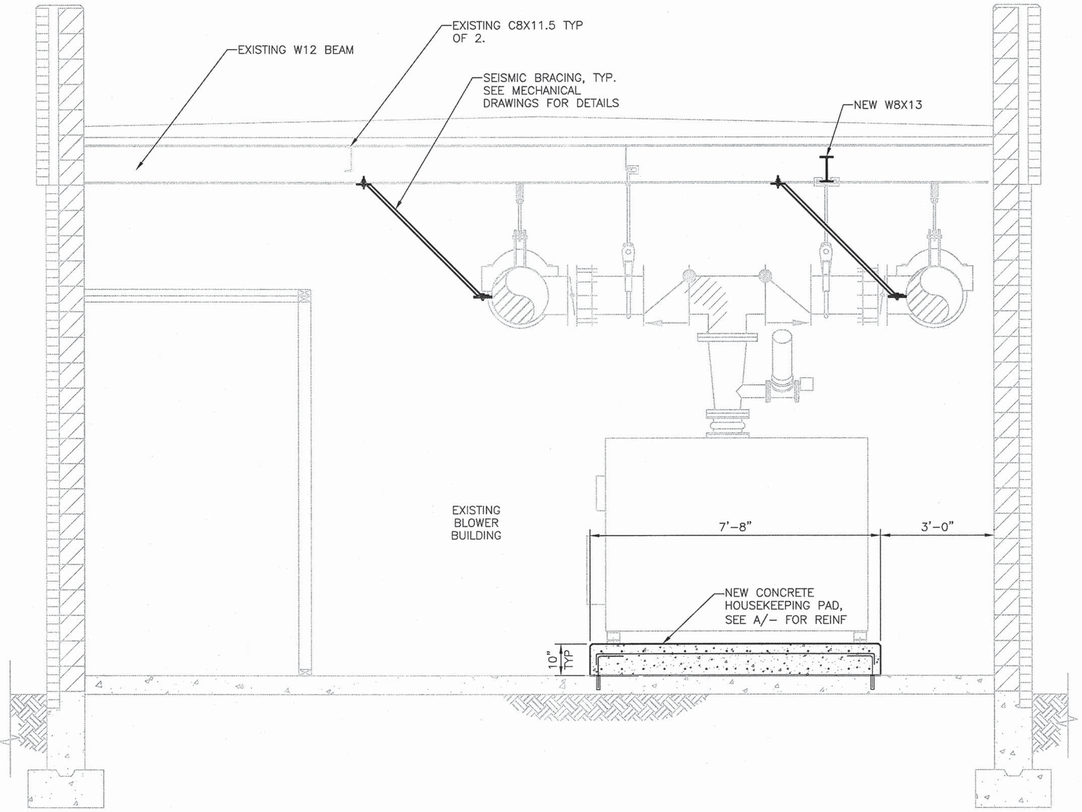


SECTION
SCALE: 1/2" = 1'-0"
B
51S101

FILE: 51S102.dwg
DATE: Jun 29, 2015 - 3:57:25pm, jwebb

HDR Engineering, Inc.

| ISSUE | DATE | DESCRIPTION |
|---|---|---|
| A | JUNE 2015 | ISSUED FOR BID |

| | |
|---|---|
| PROJECT MANAGER | C. OLSON |
| DESIGNED | Z. LI |
| DESIGNED | |
| CHECKED | O. TAVANGAR |
| DRAWN | D. ELDREDGE |
| DATE | JUNE 30, 2015 |
| PROJECT NUMBER | 215786 |

REGISTERED PROFESSIONAL ENGINEER
ZHEN LI
NO. 74809
EXP. 12/31/15
6/30/2015
CIVIL
STATE OF CALIFORNIA

CITY OF PINOLE CALIFORNIA
1903

PINOLE/HERCULES
WATER POLLUTION
CONTROL PLANT UPGRADE
CLIENT PN

**STRUCTURAL**

**BLOWER BUILDING SECTIONS**

0 1" 2"

| | |
|---|---|
| FILENAME | 51S102 |
| SCALE | AS NOTED |

SHEET
**51S102**

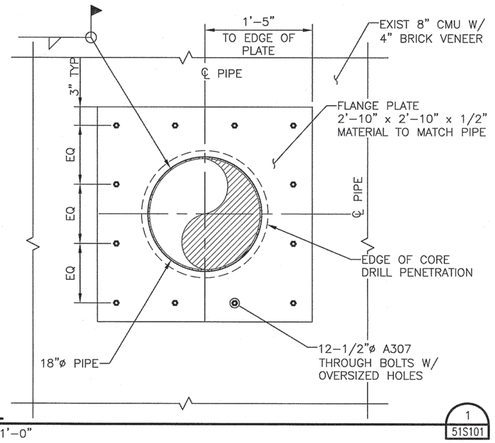


DETAIL
SCALE: 1"=1'-0"
1 / 51S101

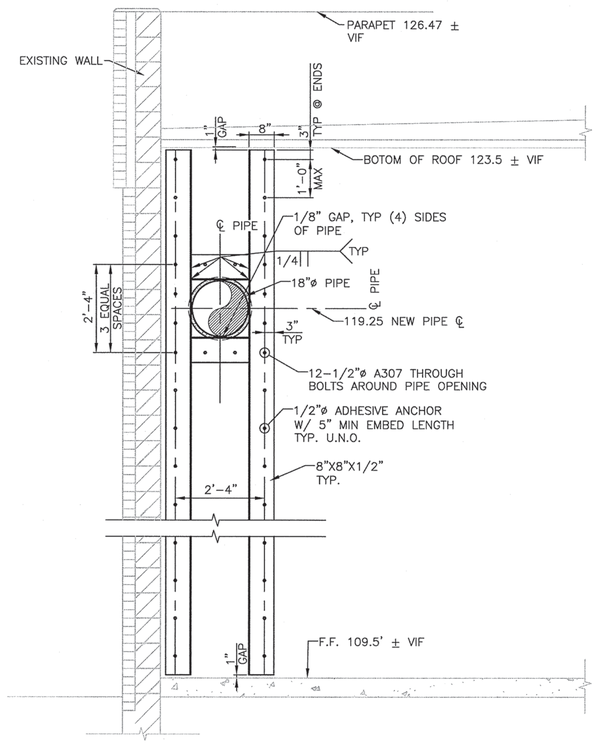


DETAIL
SCALE: 1/2"=1'-0"
2 / 51S101

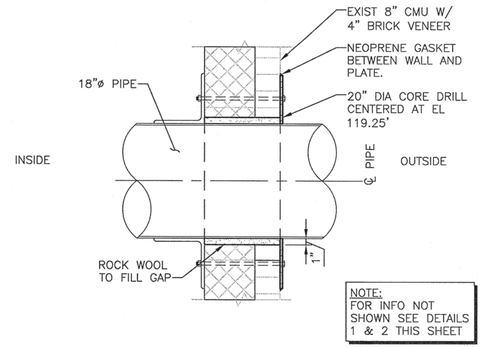


NOTE:
FOR INFO NOT SHOWN SEE DETAILS 1 & 2 THIS SHEET

DETAIL
SCALE: 1"=1'-0"
3 / 51S101

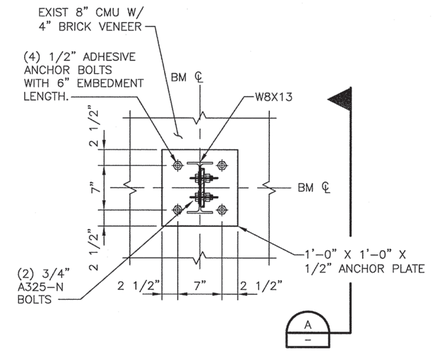


DETAIL
SCALE: 1"=1'-0"
4 / 51S101

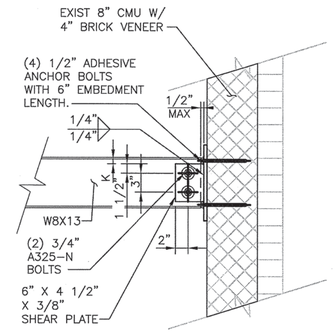


DETAIL
SCALE: 1"=1'-0"
A / –

FILE: 51S103.dwg
DATE: Jun 29, 2015 - 7:52:12pm, zhli

HDR Engineering, Inc.

| ISSUE | DATE | DESCRIPTION |
|---|---|---|
| A | JUNE 2015 | ISSUED FOR BID |

| | |
|---|---|
| PROJECT MANAGER | C. OLSON |
| | |
| DESIGNED | Z. LI |
| DESIGNED | |
| CHECKED | C. OLSON |
| DRAWN | D. ELDREDGE |
| DATE | JUNE 30, 2015 |
| | |
| PROJECT NUMBER | 215786 |

REGISTERED PROFESSIONAL ENGINEER
ZHEN LI
NO. 74809
EXP. 12/31/15
CIVIL
STATE OF CALIFORNIA

CITY OF PINOLE CALIFORNIA 1903

PINOLE/HERCULES
WATER POLLUTION
CONTROL PLANT UPGRADE
CLIENT PN

**STRUCTURAL**

**BLOWER BUILDING DETAILS**

0 1" 2"

| | |
|---|---|
| FILENAME | 51S103 |
| SCALE | AS NOTED |

SHEET
**51S103**

## NOTES:

1. FOR GENERAL NOTES, SEE SHEET 00S01 AND 00S02.
2. FOR SPECIAL INSPECTION REQUIREMENTS, SEE 00S03 AND 00S04.
3. FOR TYPICAL CONCRETE DETAILS, SEE SHEETS 00S05 THRU 00S08.
4. FOR TYPICAL REINFORCING DETAILS, SEE 00S09.
5. FOR TYPICAL PILE DETAILS AND SCHEDULE, SEE SHEET 00S10.
6. "61P-X" DENOTES 16"ø EDTTEX PILES. SEE SHEET 00S10 FOR DETAILS AND SCHEDULE.
7. ALL COLUMNS, WALLS, PILES, AND PILECAPS ARE CENTERED ON GRID LINES, UNLESS NOTED OTHERWISE.

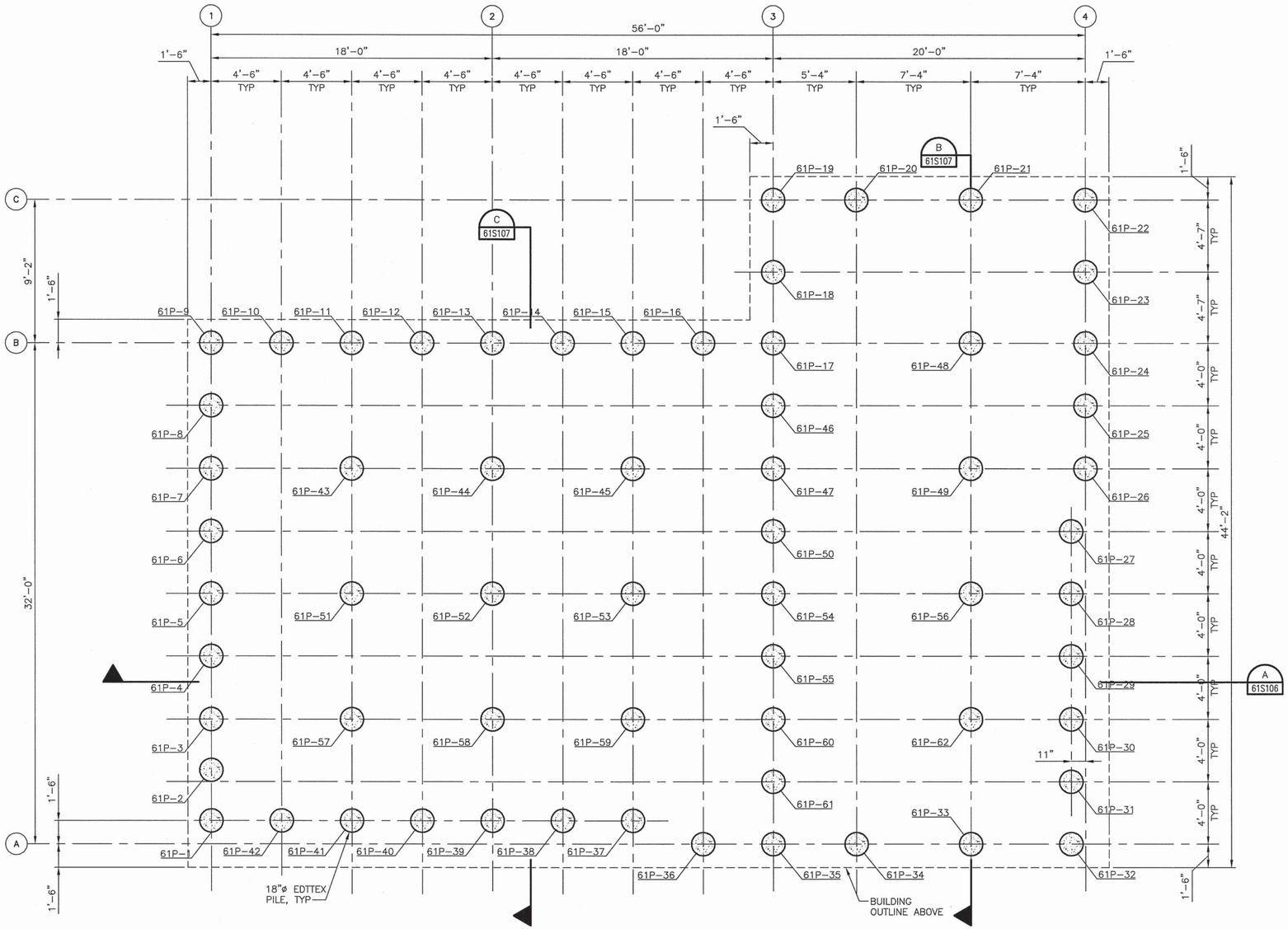

## PILE LAYOUT PLAN

1/4" = 1'-0"

FILE: 215786-61S101.dwg
DATE: Jun 30, 2015-8:43:39am, jwebb

HDR
HDR Engineering, Inc.

| ISSUE | DATE | DESCRIPTION |
|---|---|---|
| A | JUNE 2015 | ISSUED FOR BID |

| | |
|---|---|
| PROJECT MANAGER | C. OLSON |
| DESIGNED | M. MOSTAFA |
| DESIGNED | |
| CHECKED | O. TAVANGAR |
| DRAWN | D. ELDREDGE |
| DATE | JUNE 30, 2015 |
| PROJECT NUMBER | 215786 |

REGISTERED PROFESSIONAL ENGINEER
MOHAMMADREZA MOSTAFA
NO. 78649
EXP. 09/30/15
CIVIL
STATE OF CALIFORNIA
06/30/15

CITY OF PINOLE CALIFORNIA 1903

PINOLE/HERCULES
WATER POLLUTION
CONTROL PLANT UPGRADE
CLIENT PN

**STRUCTURAL**

**SOILDS HANDLING BUILDING**
**PILE LAYOUT PLAN**

0 1" 2"

| | |
|---|---|
| FILENAME | 215786-61S101 |
| SCALE | AS NOTED |

SHEET
**61S101**

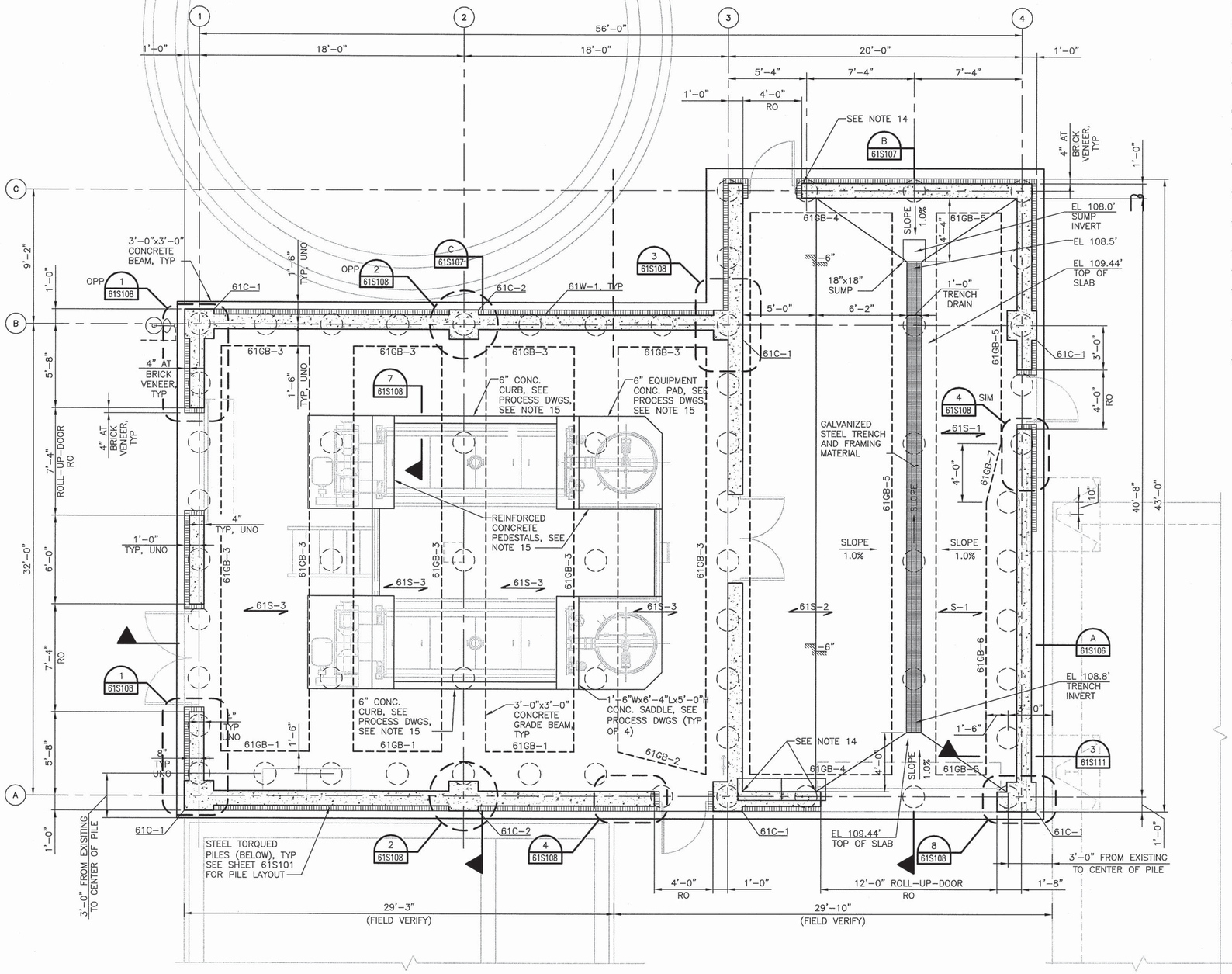


## FOUNDATION PLAN

1/4" = 1'-0"

**NOTES:**

1. FOR GENERAL NOTES, SEE SHEET 00S01 AND 00S02.
2. FOR SPECIAL INSPECTION REQUIREMENTS, SEE 00S03 AND 00S04.
3. FOR TYPICAL CONCRETE DETAILS, SEE SHEETS 00S05 THRU 00S08.
4. FOR TYPICAL REINFORCING DETAILS, SEE 00S09.
5. FOR TYPICAL CONCRETE BEAM, SLAB, AND WALL DETAILS AND SCHEDULES, SEE SHEETS 00S11 AND 00S12.
6. FOR TYPICAL GRATING DETAILS, SEE SHEET 00S18.
7. "61S-X" DENOTES CONCRETE SLAB. SEE SHEET 00S05 AND 00S12 FOR DETAILS AND SCHEDULE.
8. "61GB-X" DENOTES CONCRETE GRADE BEAM. SEE SHEET 00S11 FOR DETAILS AND SCHEDULE.
9. "61W-X" DENOTES CONCRETE WALL. SEE SHEET 00S11 FOR WALL REINFORCING SCHEDULE.
10. "61C-X" DENOTES CONCRETE COLUMN. SEE SHEET 00S08 FOR COLUMN SCHEDULE.
11. DENOTES BRICK VENEER.
12. DENOTES CHANGE IN TOP OF CONCRETE ELEVATION.
13. ALL COLUMNS, WALLS, PILES, AND PILECAPS ARE CENTERED ON GRID LINES, UNLESS NOTED OTHERWISE.
14. AROUND THE OPENINGS USE #4 CLOSED TIES TO ENCLOSE (4) VERTICAL REBARS UP TO THE TOP OF THE OPENING UNLESS OTHERWISE SHOWN ON THE DETAILS ON SHEET 61S108.
15. EXACT DIMENSIONS FOR EQUIPMENT SUPPORT TO BE DETERMINED AT THE TIME OF CONSTRUCTION AFTER APPROVAL OF EQUIPMENT SHOP DRAWINGS.

TRUE NORTH

PROJECT NORTH

FILE: 215786-61S102.dwg
DATE: Jun 30, 2015-8:43:43am, jwebb

HDR Engineering, Inc.

| ISSUE | DATE | DESCRIPTION |
|---|---|---|
| A | JUNE 2015 | ISSUED FOR BID |

| | |
|---|---|
| PROJECT MANAGER | C. OLSON |
| | |
| DESIGNED | M. MOSTAFA |
| DESIGNED | |
| CHECKED | O. TAVANGAR |
| DRAWN | D. ELDREDGE |
| DATE | JUNE 30, 2015 |
| | |
| PROJECT NUMBER | 215786 |

REGISTERED PROFESSIONAL ENGINEER MOHAMMADREZA MOSTAFA NO. 78649 EXP. 09/30/15 CIVIL STATE OF CALIFORNIA 06/30/15

CITY OF PINOLE CALIFORNIA 1903

PINOLE/HERCULES WATER POLLUTION CONTROL PLANT UPGRADE CLIENT PN

**STRUCTURAL**

**SOILDS HANDLING BUILDING FOUNDATION PLAN**

0 1" 2"

| | |
|---|---|
| FILENAME | 215786-61S102 |
| SCALE | AS NOTED |

SHEET **61S102**

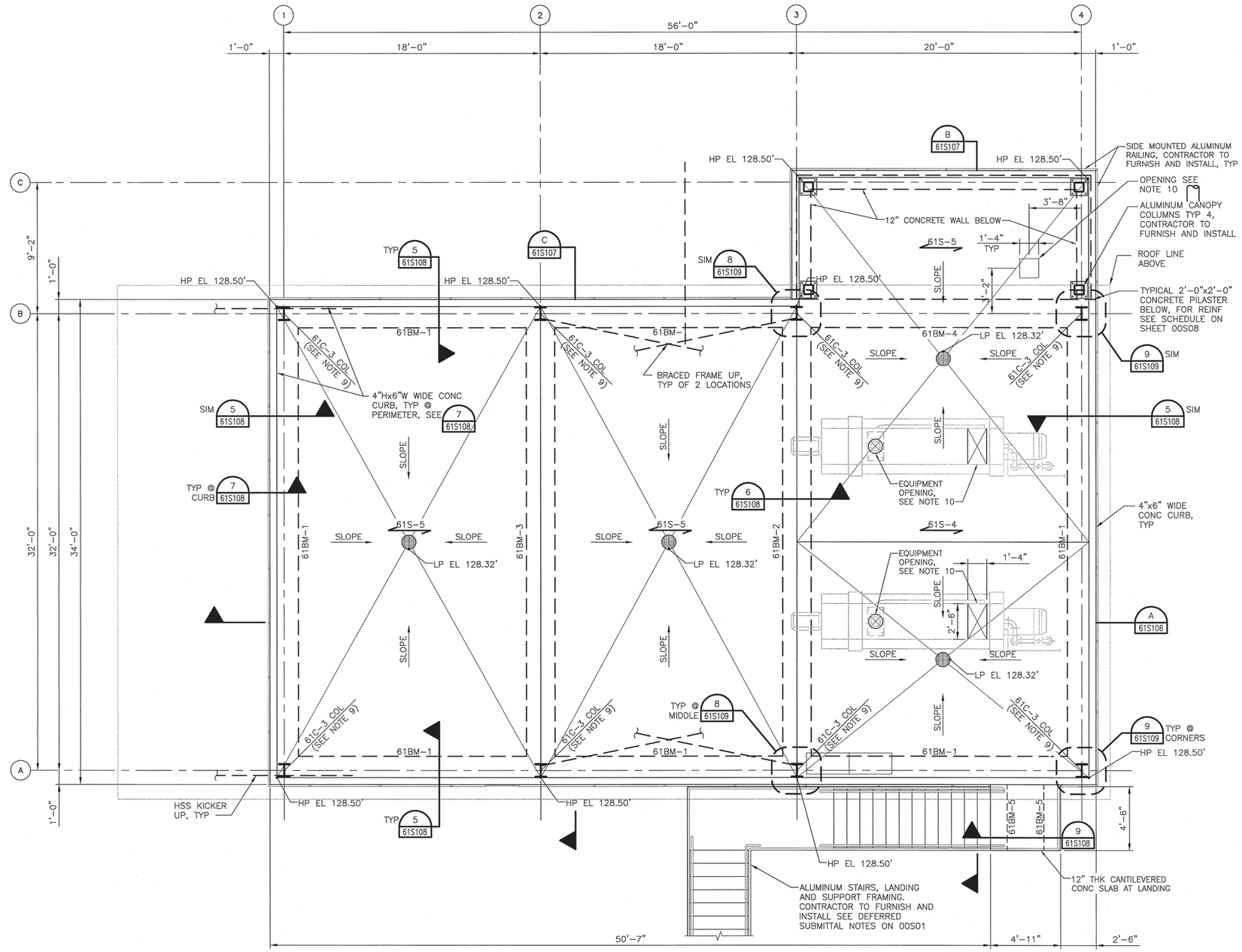


## SECOND FLOOR FRAMING PLAN

1/4" = 1'-0"

## NOTES:

1. FOR GENERAL NOTES, SEE SHEET 00S01 AND 00S02.
2. FOR SPECIAL INSPECTION REQUIREMENTS, SEE 00S03 AND 00S04.
3. FOR TYPICAL CONCRETE DETAILS, SEE SHEETS 00S05 THRU 00S08.
4. FOR TYPICAL REINFORCING DETAILS, SEE 00S09.
5. FOR TYPICAL CONCRETE BEAM, SLAB, AND WALL DETAILS AND SCHEDULES, SEE SHEETS 00S11 AND 00S12.
6. "61S-X" DENOTES CONCRETE SLAB. SEE SHEET 00S05 AND 00S12 FOR DETAILS AND SCHEDULE.
7. "61BM-X" DENOTES CONCRETE BEAM. SEE SHEET 00S12 FOR DETAILS AND SCHEDULE.
8. ALL COLUMNS, WALLS, PILES, AND PILECAPS ARE CENTERED ON GRID LINES, UNLESS NOTED OTHERWISE.
9. 61C-X COL DENOTES STEEL COLUMN. SEE COLUMN SCHEDULE FOR COLUMN TYPE AND SIZE ON 5/00S14.
10. CONTRACTOR SHALL VERIFY EXACT LOCATION OF THE EQUIPMENT AND SIZE/LOCATIONS OF EQUIPMENT OPENINGS PRIOR TO POURING THE CONCRETE SLAB.

FILE: 215786-61S103.dwg
DATE: Jun 30, 2015-11:29:37am, rsnider

HDR
HDR Engineering, Inc.

| ISSUE | DATE | DESCRIPTION |
|---|---|---|
| A | JUNE 2015 | ISSUED FOR BID |

| | |
|---|---|
| PROJECT MANAGER | C. OLSON |
| DESIGNED | M. MOSTAFA |
| DESIGNED | |
| CHECKED | O. TAVANGAR |
| DRAWN | D. ELDREDGE |
| DATE | JUNE 30, 2015 |
| PROJECT NUMBER | 215786 |

REGISTERED PROFESSIONAL ENGINEER
MOHAMMADREZA MOSTAFA
NO. 78649
EXP. 09/30/15
CIVIL
STATE OF CALIFORNIA
06/30/15

CITY OF PINOLE CALIFORNIA 1903

PINOLE/HERCULES WATER POLLUTION CONTROL PLANT UPGRADE CLIENT PN

**STRUCTURAL**

**SOLIDS HANDLING BUILDING SECOND FLOOR FRAMING PLAN**

0 1" 2"

| | |
|---|---|
| FILENAME | 215786-61S103 |
| SCALE | AS NOTED |

SHEET **61S103**

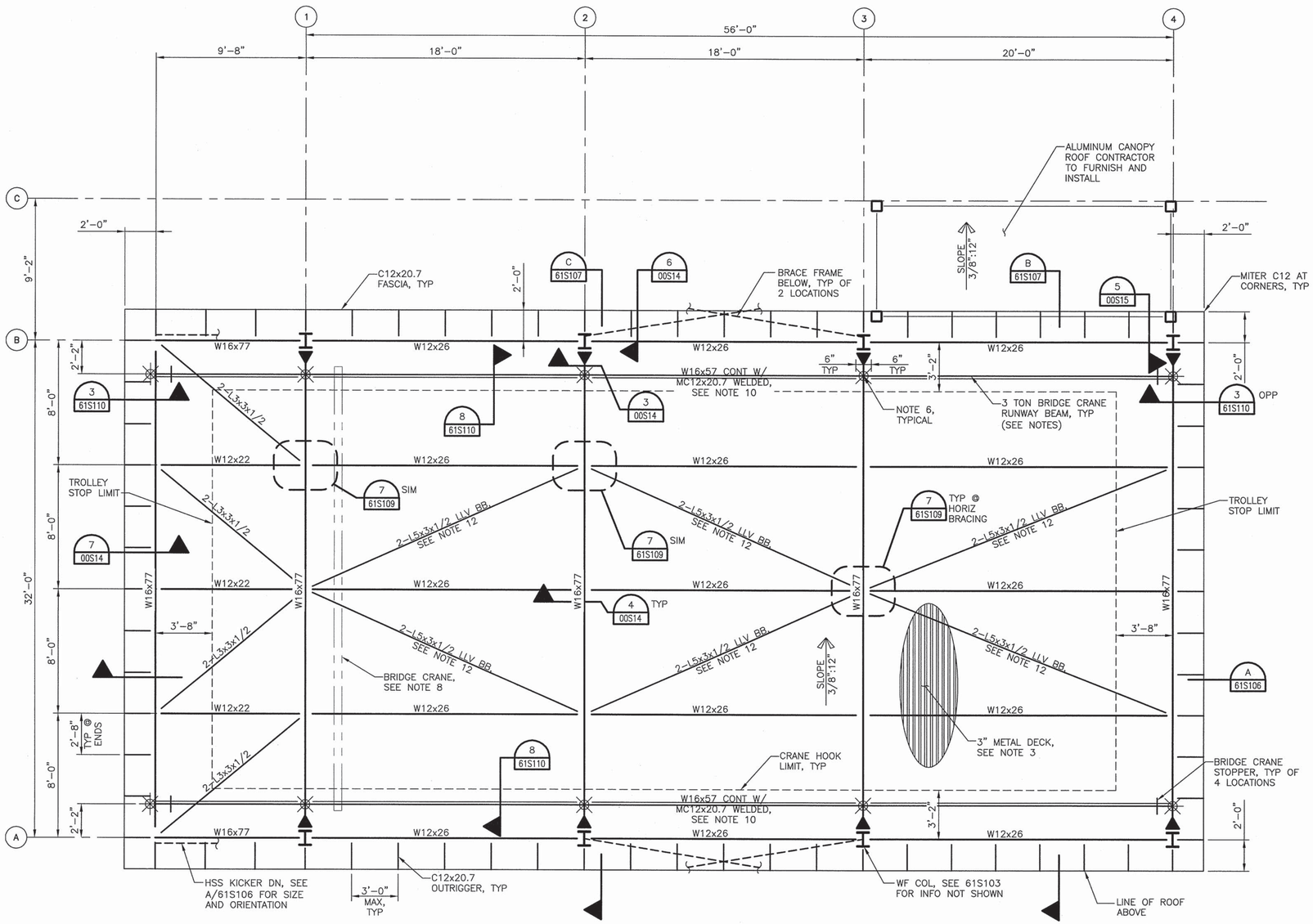


## CRANE FRAMING PLAN

1/4" = 1'-0"

**NOTES:**

1. FOR GENERAL NOTES, SEE SHEET 00S01 AND 00S02.
2. FOR SPECIAL INSPECTION REQUIREMENTS, SEE 00S03 AND 00S04.
3. FOR TYPICAL METAL DECK DETAILS, SEE SHEET 00S17.
4. FOR TYPICAL STEEL DETAILS, SEE SHEET 00S14, 00S015 AND 00S16.
5. ALL COLUMNS, WALLS, PILES, AND PILECAPS ARE CENTERED ON GRID LINES, UNLESS NOTED OTHERWISE.
6. DENOTES TYPICAL CRANE RAIL SUPPORT, SEE DETAIL X/XXXXXX.
7. DENOTES MOMENT FRAME CONNECTION, SEE 00S10 FOR DETAILS.
8. 3 TON UNDER HUNG CRANE GIRDER.
9. REFERENCE DESIGN LOADS OUTLINED ON SHEET 00S001 FOR ADDITIONAL DESIGN LOAD REQUIREMENTS.
10. MC12x20.7 STOPS AT 6" FROM CENTERLINE OF PERPENDICULAR W16 GIRDER BEAMS, TYPICAL.
11. DENOTES BRACING BELOW, SEE SHEET 61S106 FOR SIZE AND ORIENTATION.
12. PROVIDE STITCH PLATE FOR ALL DOUBLE ANGLED BRACING PER CBC.
13. CONTRACTOR TO VERIFY CRANE HOOK EXTENTS FROM MANUFACTURER FOR CLEARANCES PRIOR TO CONSTRUCTION.

TRUE NORTH

PROJECT NORTH

FILE: 215786-61S104.dwg
DATE: Jun 30, 2015-8:43:50am, jwebb

HDR Engineering, Inc.

| ISSUE | DATE | DESCRIPTION |
|---|---|---|
| A | JUNE 2015 | ISSUED FOR BID |

| | |
|---|---|
| PROJECT MANAGER | C. OLSON |
| | |
| DESIGNED | M. MOSTAFA |
| DESIGNED | |
| CHECKED | O. TAVANGAR |
| DRAWN | D. ELDREDGE |
| DATE | JUNE 30, 2015 |
| | |
| PROJECT NUMBER | 215786 |

REGISTERED PROFESSIONAL ENGINEER MOHAMMADREZA MOSTAFA NO. 78649 EXP. 09/30/15 CIVIL STATE OF CALIFORNIA 06/30/15

CITY OF PINOLE CALIFORNIA 1903

PINOLE/HERCULES WATER POLLUTION CONTROL PLANT UPGRADE
CLIENT PN

**STRUCTURAL**

**SOLIDS HANDLING BUILDING CRANE / ROOF FRAMING PLAN**

0 1" 2"

| | |
|---|---|
| FILENAME | 215786-61S104 |
| SCALE | AS NOTED |

SHEET **61S104**

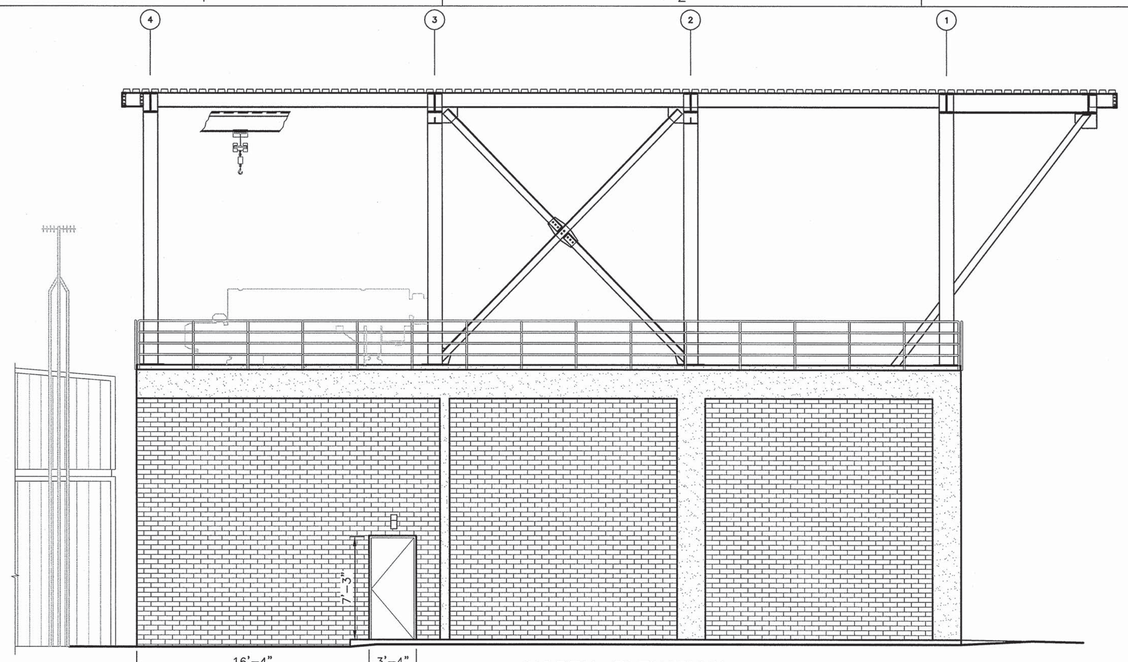


NORTH ELEVATION
SCALE: 3/16" = 1'-0"

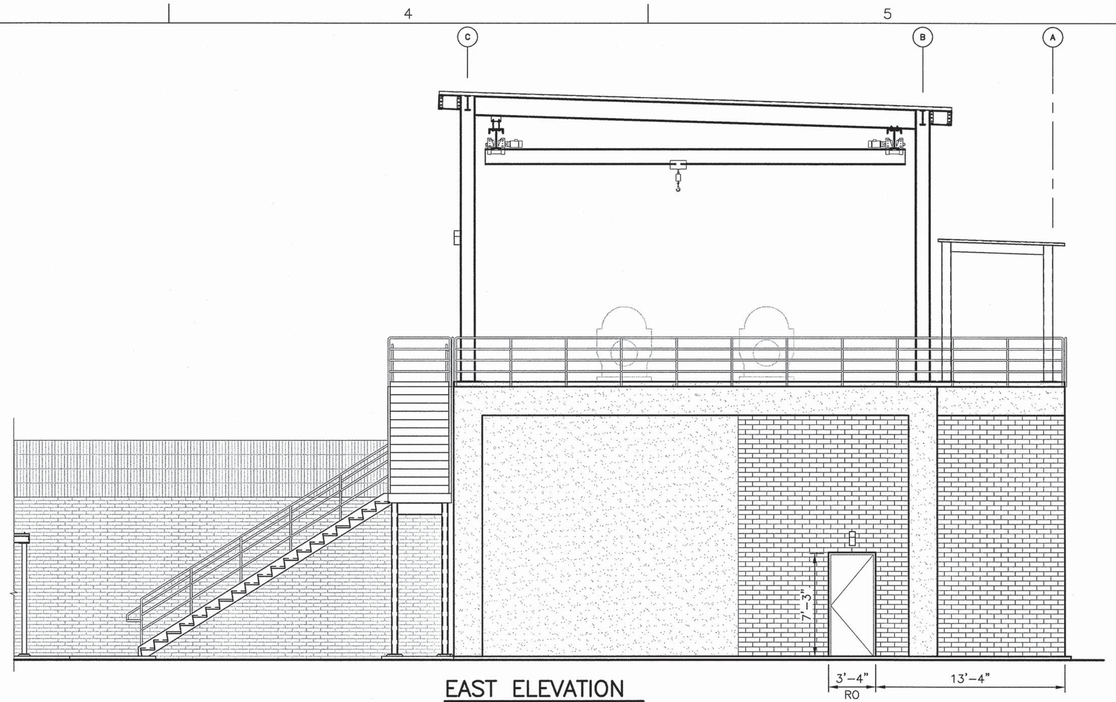


EAST ELEVATION
SCALE: 3/16" = 1'-0"

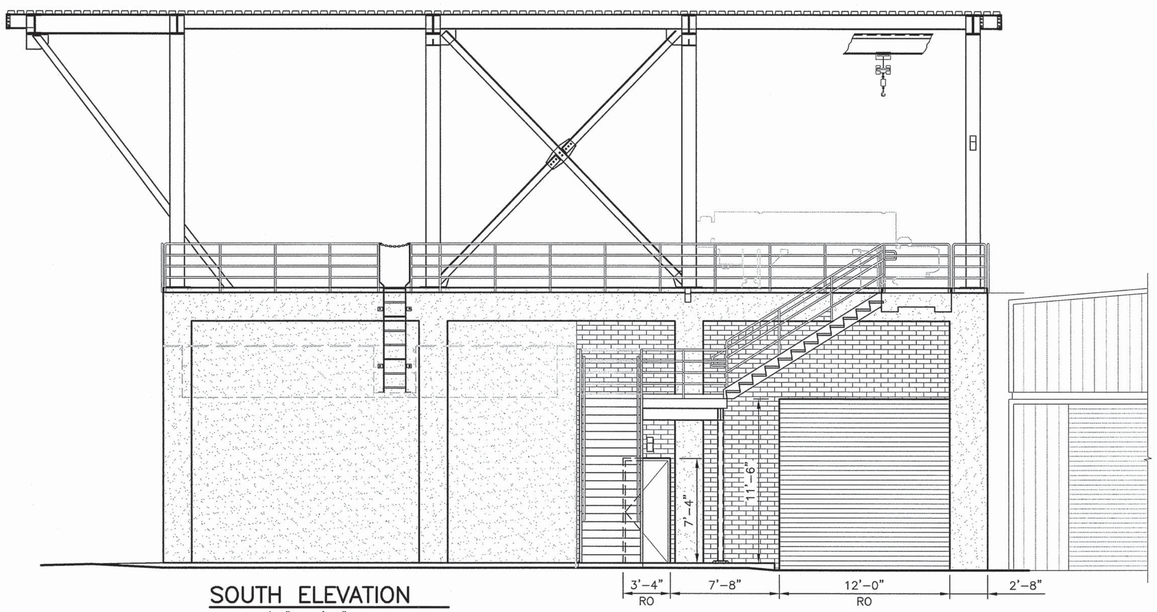


SOUTH ELEVATION
SCALE: 3/16" = 1'-0"

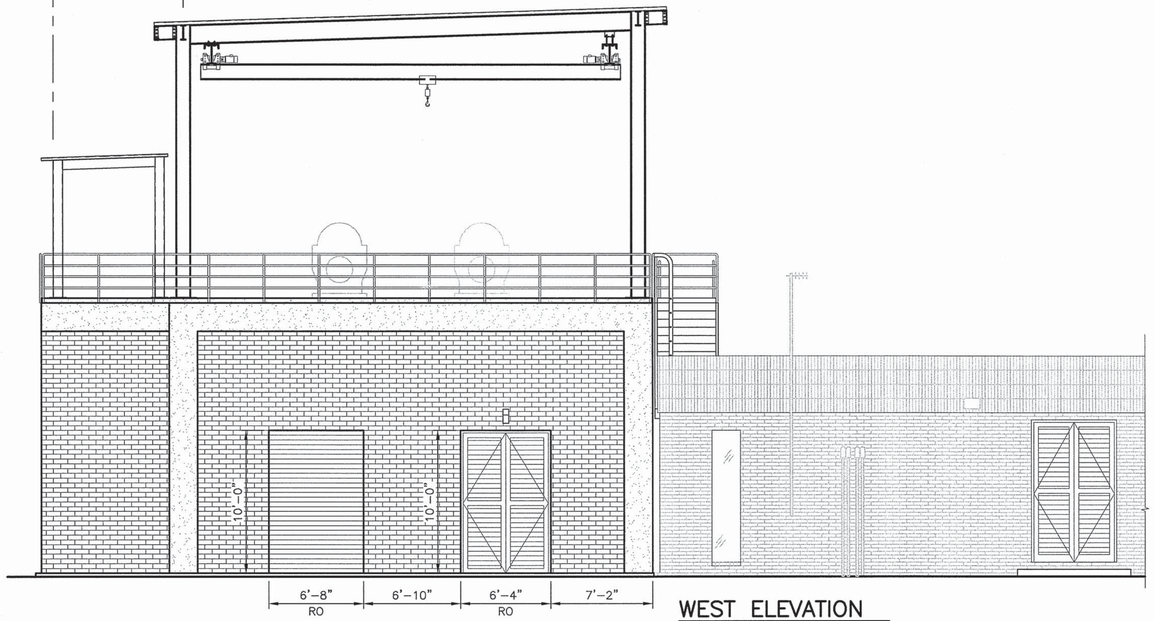


WEST ELEVATION
SCALE: 3/16" = 1'-0"

FILE: 215786-61S105.dwg
DATE: Jun 30, 2015-8:43:55am, jwebb

HDR
HDR Engineering, Inc.

| ISSUE | DATE | DESCRIPTION |
|---|---|---|
| A | JUNE 2015 | ISSUED FOR BID |

| | |
|---|---|
| PROJECT MANAGER | C. OLSON |
| DESIGNED | M. MOSTAFA |
| DESIGNED | |
| CHECKED | O. TAVANGAR |
| DRAWN | D. ELDREDGE |
| DATE | JUNE 30, 2015 |
| PROJECT NUMBER | 215786 |

REGISTERED PROFESSIONAL ENGINEER
MOHAMMADREZA MOSTAFA
NO. 78649
EXP. 09/30/15
CIVIL
STATE OF CALIFORNIA
06/30/15

CITY OF PINOLE CALIFORNIA 1903

PINOLE/HERCULES
WATER POLLUTION
CONTROL PLANT UPGRADE
CLIENT PN

**STRUCTURAL**

**SOLIDS HANDLING BUILDING**
**STRUCTURAL ELEVATONS**

0 1" 2"

| | |
|---|---|
| FILENAME | 215786-61S105 |
| SCALE | AS NOTED |

SHEET
**61S105**

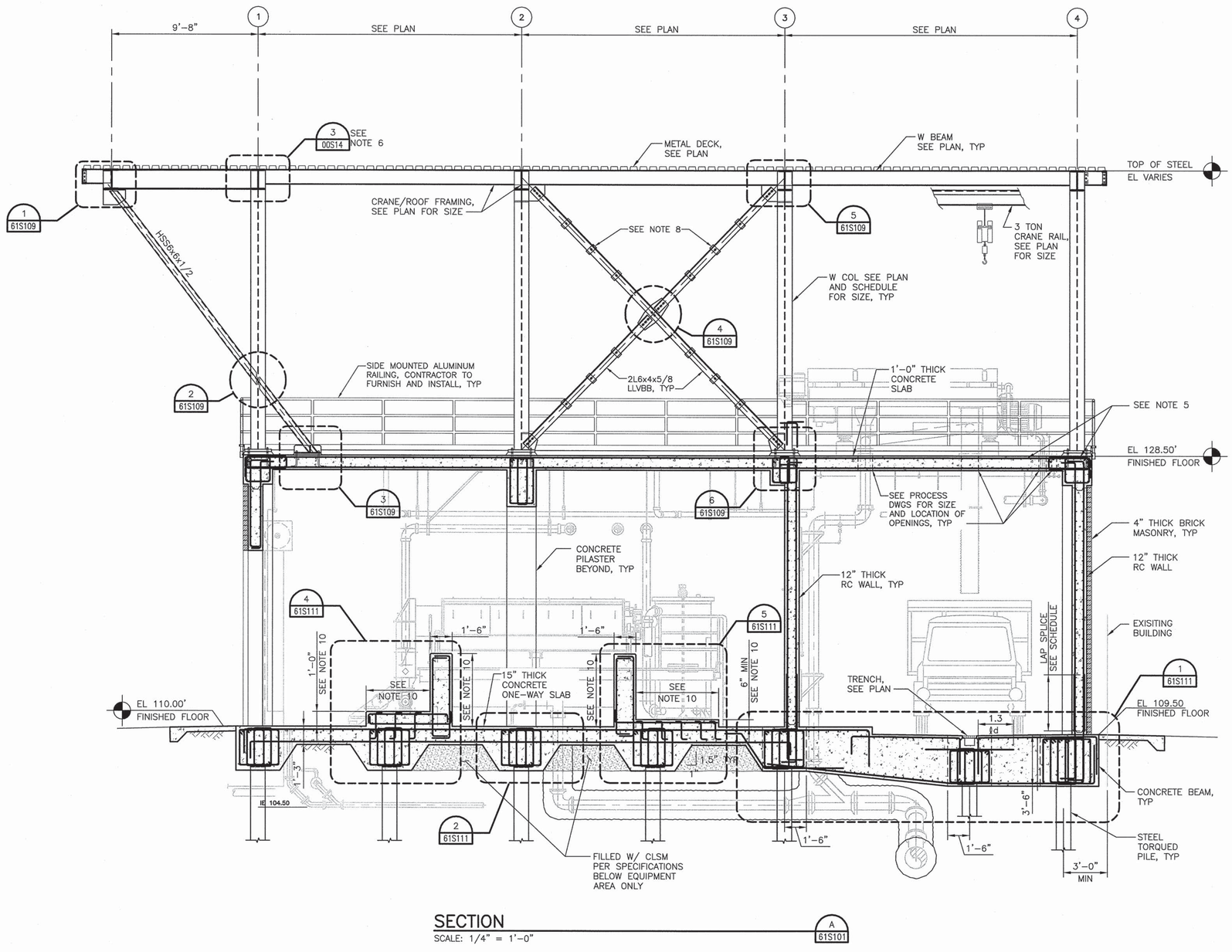


## SECTION

SCALE: 1/4" = 1'-0"

A 61S101

## NOTES:

1. FOR GENERAL NOTES, SEE SHEET 00S01 AND 00S02.
2. FOR SPECIAL INSPECTION REQUIREMENTS, SEE 00S03 AND 00S04.
3. FOR TYPICAL CONCRETE DETAILS, SEE SHEETS 00S05 THRU 00S08.
4. FOR TYPICAL REINFORCING DETAILS, SEE 00S09.
5. FOR TYPICAL CONCRETE BEAM, SLAB, AND WALL DETAILS AND SCHEDULES, SEE SHEETS 00S11 AND 00S12.
6. FOR TYPICAL METAL DECK DETAILS, SEE SHEET 00S17.
7. FOR TYPICAL STEEL DETAILS, SEE SHEET 00S14, 00S015 AND 00S16.
8. PROVIDE STITCH PLATE FOR ALL DOUBLE ANGLED BRACING PER CBC.
9. FOR TYPICAL GRADE BEAM DETAILS AND SCHEDULE SEE 00S11.
10. EXACT DIMENSIONS FOR EQUIPMENT SUPPORT TO BE DETERMINED AT THE TIME OF CONSTRUCTION AFTER APPROVAL OF EQUIPMENT SHOP DRAWING. SEE 61S111 FOR REINFORCEMENT.

FILE: 215786-61S106.dwg
DATE: Jun 30, 2015-8:43:58am, jwebb

HDR
HDR Engineering, Inc.

| ISSUE | DATE | DESCRIPTION |
|---|---|---|
| A | JUNE 2015 | ISSUED FOR BID |

| | |
|---|---|
| PROJECT MANAGER | C. OLSON |
| DESIGNED | M. MOSTAFA |
| DESIGNED | |
| CHECKED | O. TAVANGAR |
| DRAWN | D. ELDREDGE |
| DATE | JUNE 30, 2015 |
| PROJECT NUMBER | 215786 |

REGISTERED PROFESSIONAL ENGINEER MOHAMMADREZA MOSTAFA NO. 78649 EXP. 09/30/15 CIVIL STATE OF CALIFORNIA 06/30/15

CITY OF PINOLE CALIFORNIA 1903

PINOLE/HERCULES WATER POLLUTION CONTROL PLANT UPGRADE CLIENT PN

**STRUCTURAL**

**SOLIDS HANDLING BUILDING BUILDING SECTION A**

0 1" 2"

| | |
|---|---|
| FILENAME | 215786-61S106 |
| SCALE | AS NOTED |

SHEET 61S106

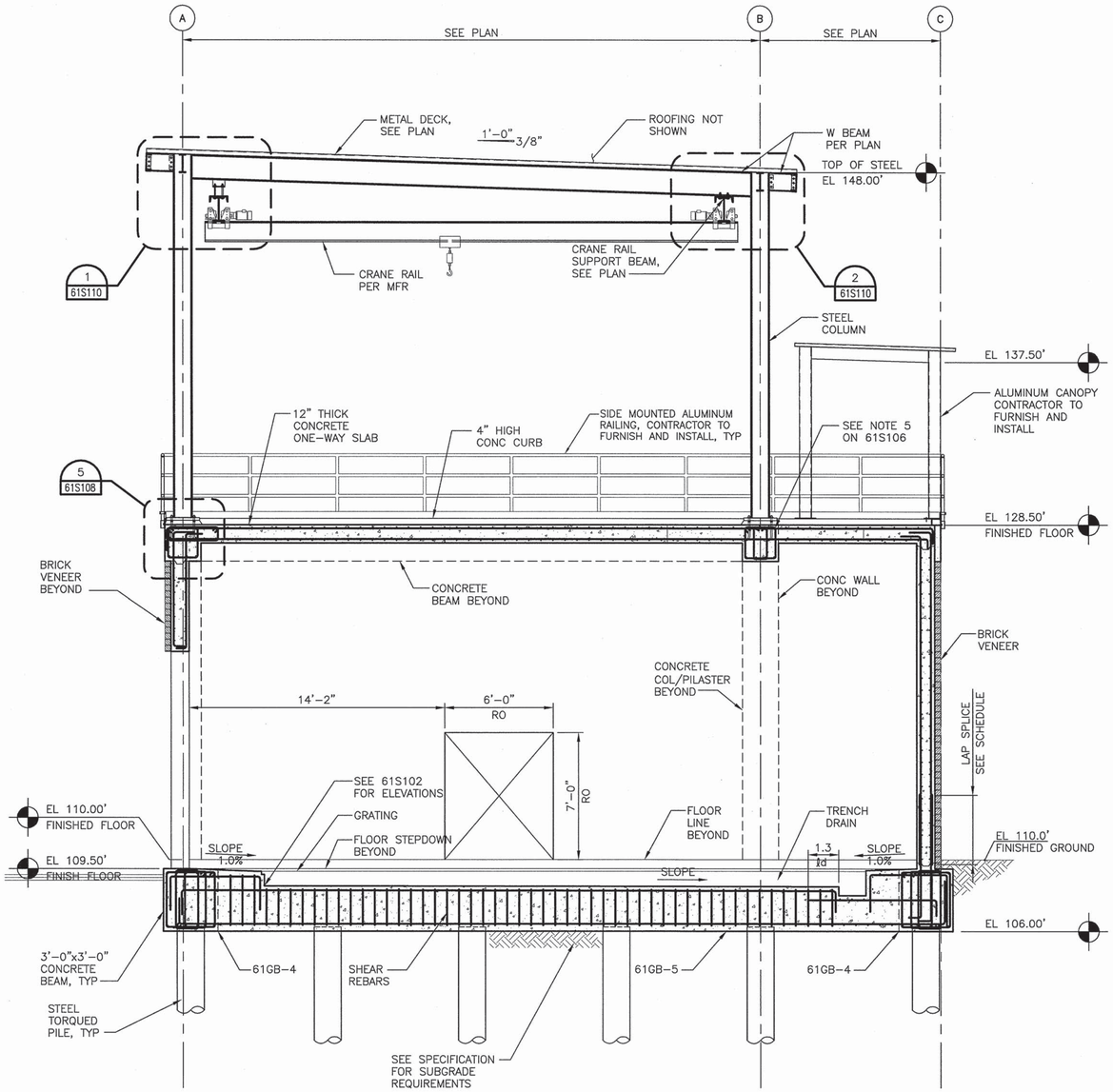


## SECTION
SCALE: 1/4" = 1'-0"

B 61S101

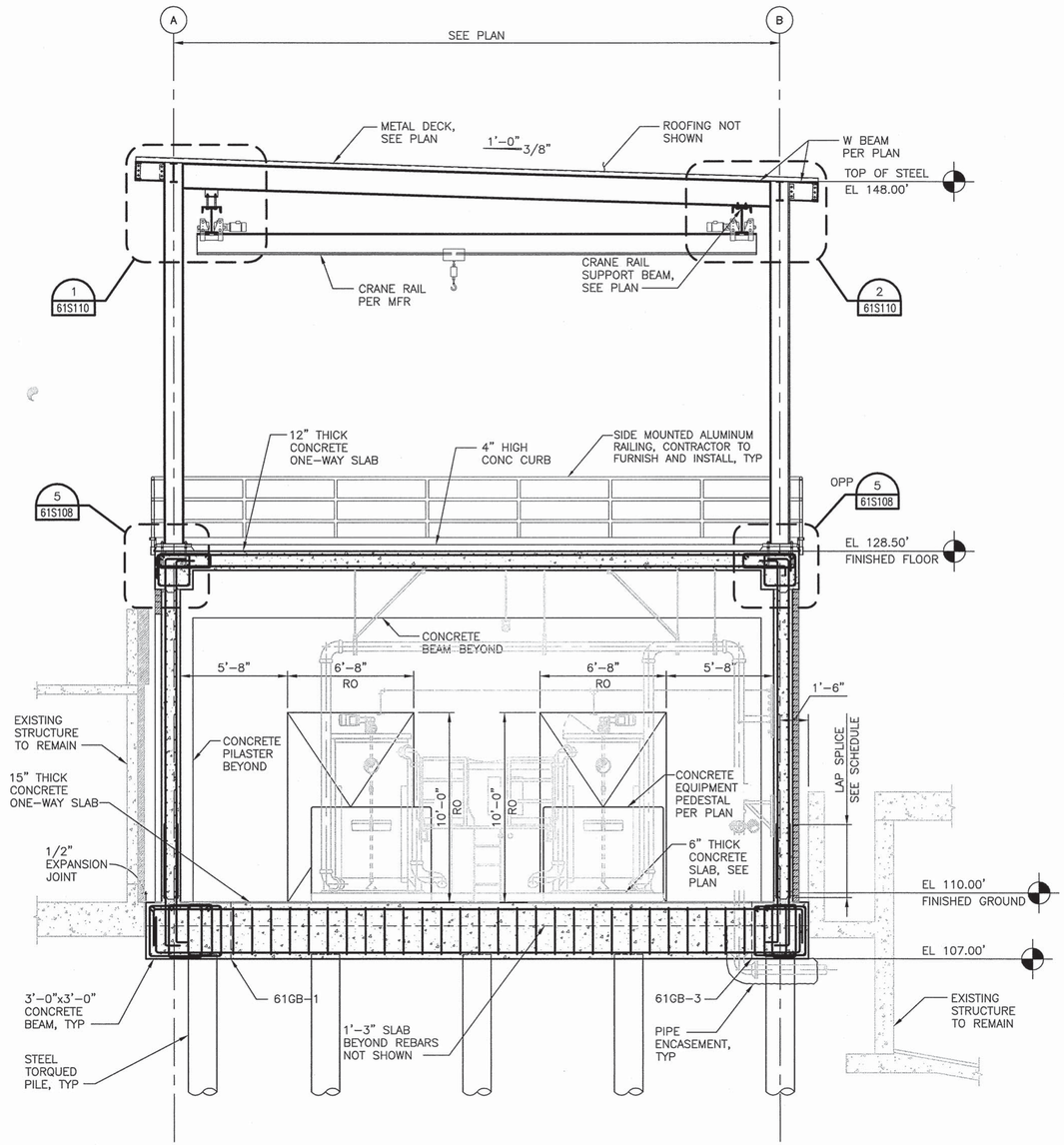


## SECTION
SCALE: 1/4" = 1'-0"

C 61S101

FILE: 215786-61S107.dwg
DATE: Jun 30, 2015-8:44:03am, jwebb

HDR Engineering, Inc.

| ISSUE | DATE | DESCRIPTION |
|---|---|---|
| A | JUNE 2015 | ISSUED FOR BID |

| | |
|---|---|
| PROJECT MANAGER | C. OLSON |
| DESIGNED | M. MOSTAFA |
| DESIGNED | |
| CHECKED | O. TAVANGAR |
| DRAWN | D. ELDREDGE |
| DATE | JUNE 30, 2015 |
| PROJECT NUMBER | 215786 |

REGISTERED PROFESSIONAL ENGINEER MOHAMMADREZA MOSTAFA NO. 78649 EXP. 09/30/15 CIVIL STATE OF CALIFORNIA 06/30/15

CITY OF PINOLE CALIFORNIA 1903

PINOLE/HERCULES
WATER POLLUTION
CONTROL PLANT UPGRADE
CLIENT PN

**STRUCTURAL**

**SOLIDS HANDLING BUILDING**
**BUILDING SECTION C**

0 1" 2"

| | |
|---|---|
| FILENAME | 215786-61S107 |
| SCALE | AS NOTED |

SHEET **61S107**

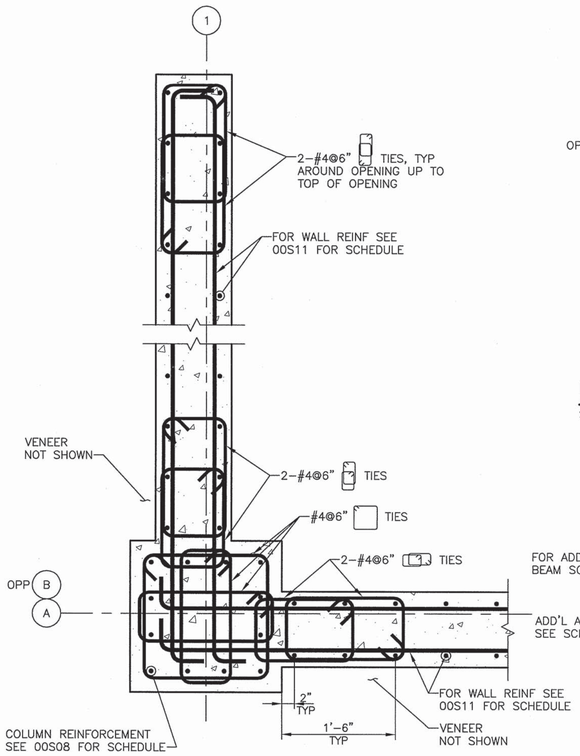


## MIDDLE COLUMN DETAIL

SCALE: 1"=1'–0"

2 / 61S102

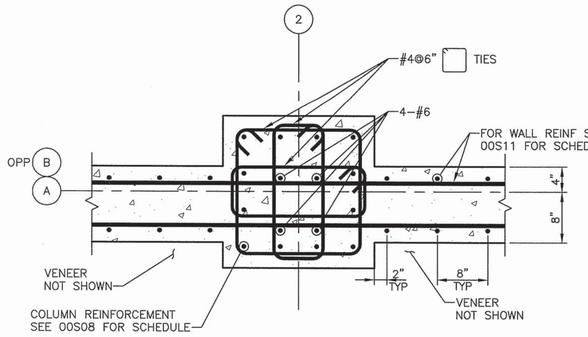


## INTERSECTING WALLS @ COLUMN DETAIL

SCALE: 1"=1'–0"

3 / 61S102

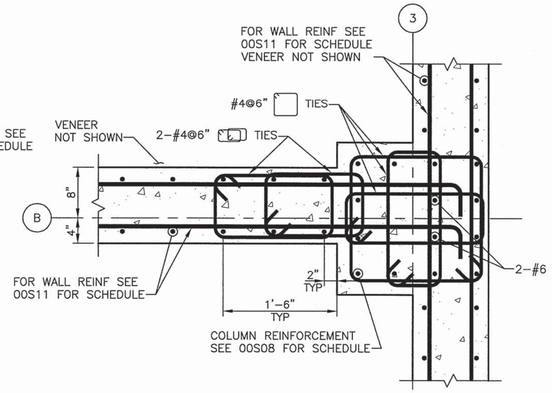


## WALL AT OPENING DETAIL

SCALE: 1"=1'–0"

4 / 61S102

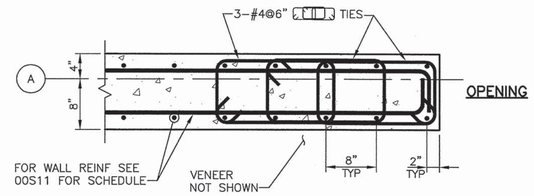





## CORNER COLUMN DETAIL

SCALE: 1"=1'–0"

1 / 61S102

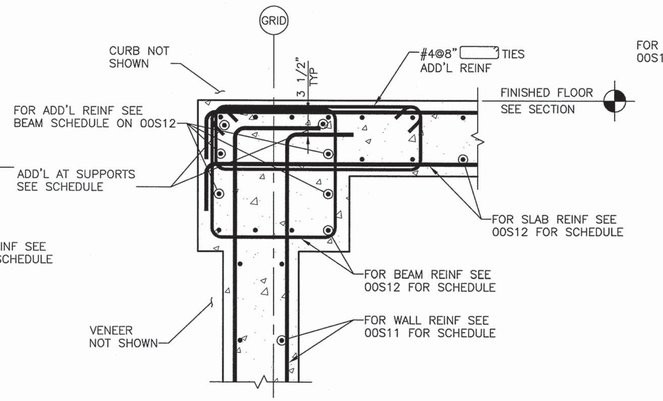


## PERIMETER BEAM DETAIL

SCALE: 1"=1'–0"

5 / 61S103

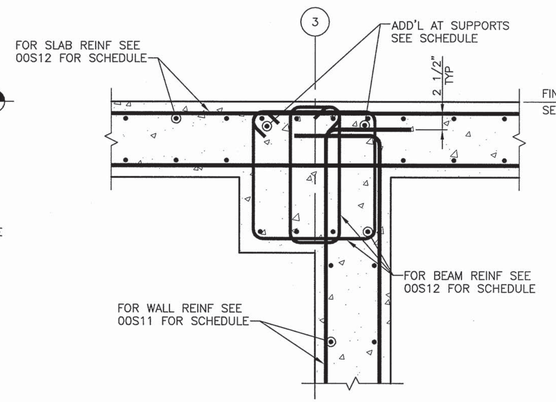


## INTERIOR BEAM DETAIL

SCALE: 1"=1'–0"

6 / 61S103

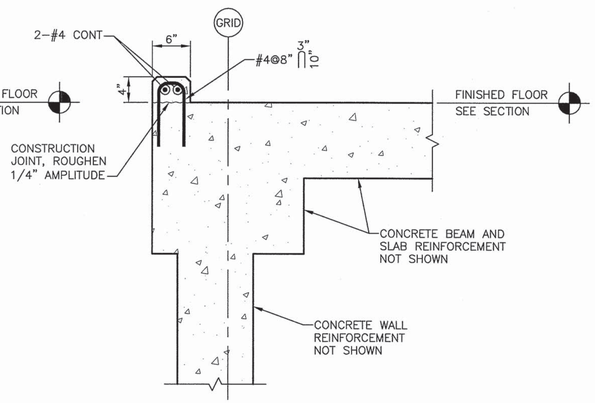


## CONCRETE CURB DETAIL

SCALE: 1"=1'–0"

7 / 61S103

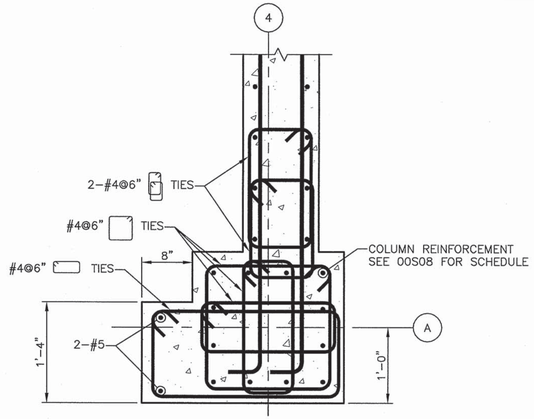


## CORNER COLUMN DETAIL

SCALE: 1"=1'–0"

8 / 61S102

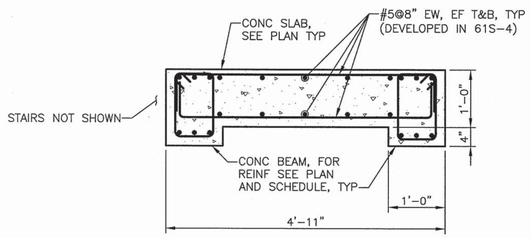


## DETAIL AT STAIR LANDING

SCALE: 3/4"=1'–0"

9 / 61S103

NOT FOR CONSTRUCTION

FILE: 215786–61S108.dwg
DATE: Jun 30, 2015–8:44:11am, jwebb

HDR Engineering, Inc.

| ISSUE | DATE | DESCRIPTION |
|---|---|---|
| A | JUNE 2015 | ISSUED FOR BID |

| | |
|---|---|
| PROJECT MANAGER | C. OLSON |
| DESIGNED | M. MOSTAFA |
| DESIGNED | |
| CHECKED | O. TAVANGAR |
| DRAWN | D. ELDREDGE |
| DATE | JUNE 30, 2015 |
| PROJECT NUMBER | 215786 |

REGISTERED PROFESSIONAL ENGINEER MORAMADREZA MOSTAFA NO. 78649 EXP. 09/30/15 CIVIL STATE OF CALIFORNIA 06/30/15

CITY OF PINOLE CALIFORNIA 1903

PINOLE/HERCULES
WATER POLLUTION
CONTROL PLANT UPGRADE
CLIENT PN

**STRUCTURAL**

**SOLIDS HANDLING BUILDING DETAILS - I**

0 1" 2"

| | |
|---|---|
| FILENAME | 215786–61S108 |
| SCALE | AS NOTED |

SHEET **61S108**

## STRUT TO BEAM CONN DETAIL

SCALE: 1"=1'-0"

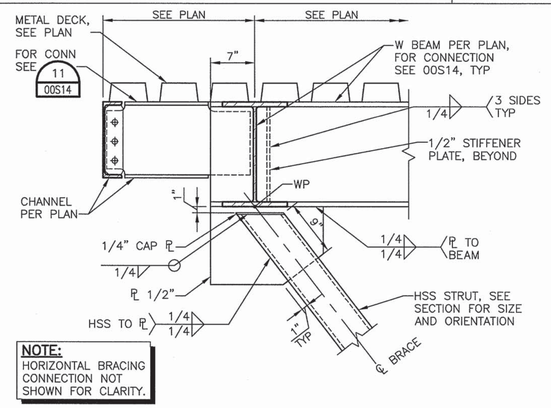


**NOTE:**
HORIZONTAL BRACING CONNECTION NOT SHOWN FOR CLARITY.

## STRUT TO COL CONN DETAIL

SCALE: 1"=1'-0"

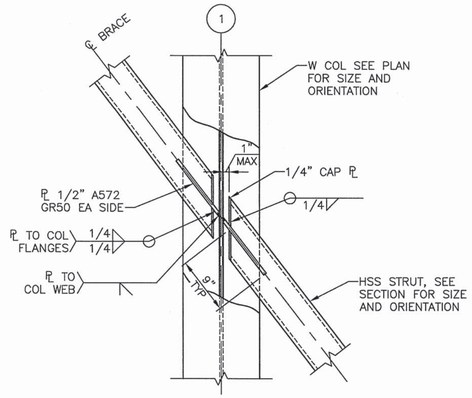


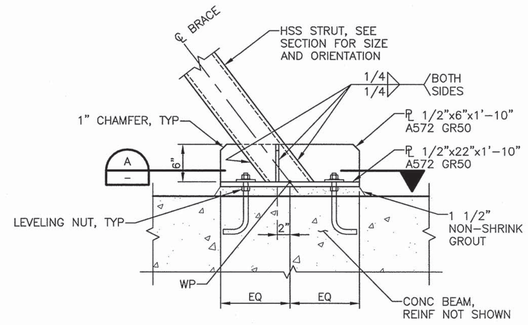


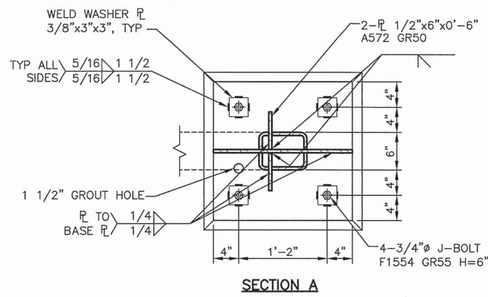


SECTION A

## HSS STRUT TO BASE PLATE CONN DETAIL

SCALE: 1"=1'-0"

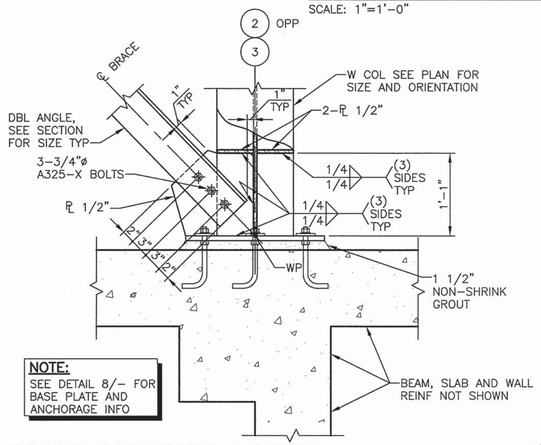


**NOTE:**
SEE DETAIL 8/- FOR BASE PLATE AND ANCHORAGE INFO

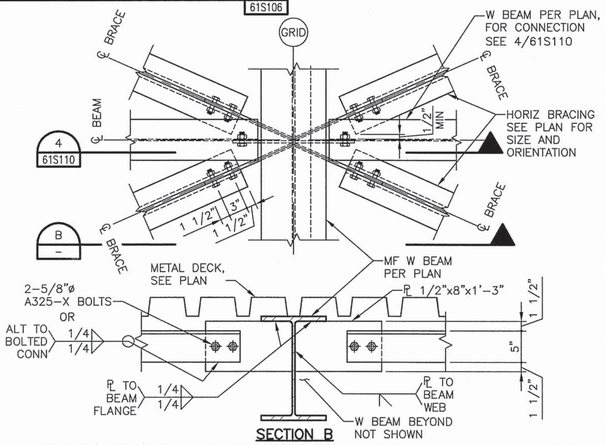


SECTION B

## BRACE CONNECTION DETAIL

SCALE: 1"=1'-0"

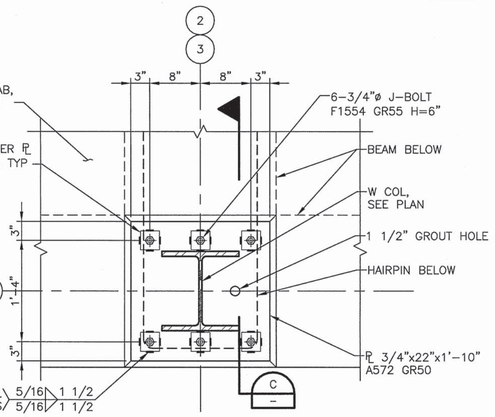


## BRACE CONNECTION DETAIL

SCALE: 1"=1'-0"

## BRACE CONNECTION DETAIL

SCALE: 1"=1'-0"

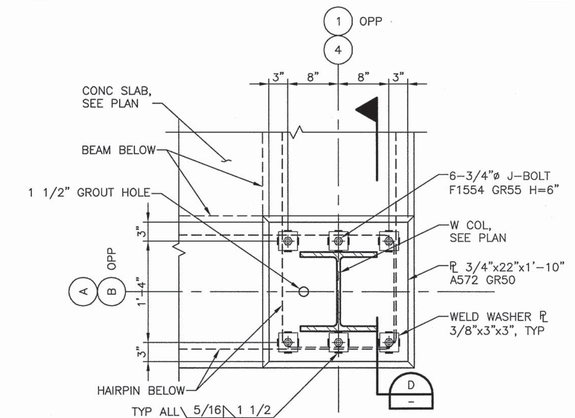


## HORIZ BRACE CONNECTION DETAIL

SCALE: 1"=1'-0"

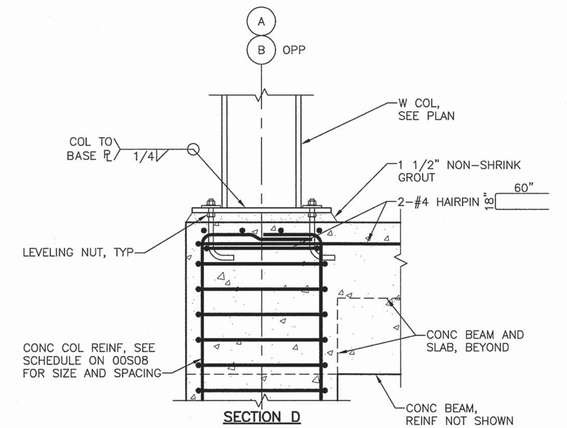


SECTION D

## MIDDLE COL TO BASE PLATE CONN

SCALE: 1"=1'-0"

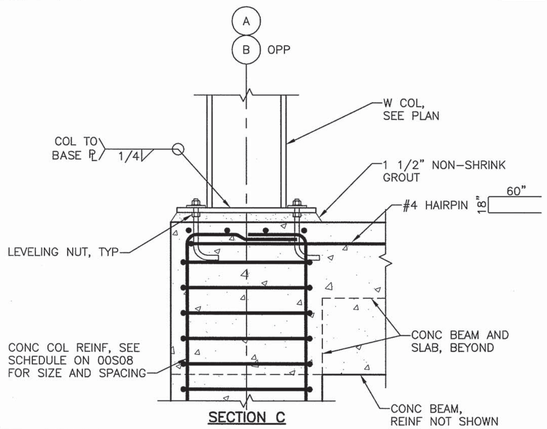


SECTION C

## CORNER COL TO BASE PLATE CONN

SCALE: 1"=1'-0"

NOT FOR CONSTRUCTION

FILE: 61S109.dwg
DATE: Jun 30, 2015-8:45:16am, jwebb

HDR Engineering, Inc.

| ISSUE | DATE | DESCRIPTION |
|---|---|---|
| A | JUNE 2015 | ISSUED FOR BID |

| | |
|---|---|
| PROJECT MANAGER | C. OLSON |
| DESIGNED | M. MOSTAFA |
| DESIGNED | |
| CHECKED | O. TAVANGAR |
| DRAWN | D. ELDREDGE |
| DATE | JUNE 30, 2015 |
| PROJECT NUMBER | 215786 |

REGISTERED PROFESSIONAL ENGINEER MOHAMMADREZA MOSTAFA NO. 78649 EXP. 09/30/15 CIVIL STATE OF CALIFORNIA 06/30/15

CITY OF PINOLE CALIFORNIA 1903

PINOLE/HERCULES
WATER POLLUTION
CONTROL PLANT UPGRADE
CLIENT PN

**STRUCTURAL**

**SOLIDS HANDLING BUILDING DETAILS - II**

0 1" 2"

| FILENAME | 61S109 |
|---|---|
| SCALE | AS NOTED |

SHEET **61S109**

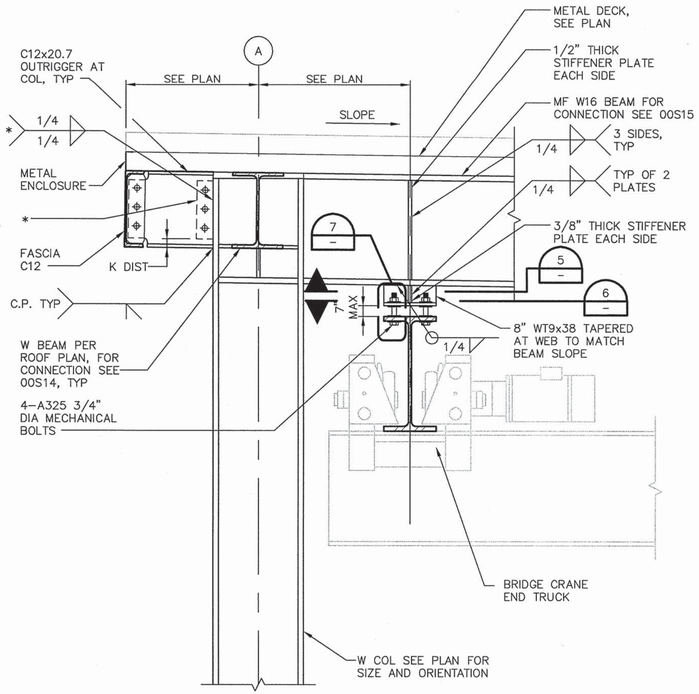


**NOTES:**
1. * SHEAR PLATE AND BOLTS CAN BE REPLACED WITH WEB DIRECTLY WELDED TO COL FLANGE.
2. SEE PLAN FOR BEAM SIZES, TYPICAL.

## DETAIL 1
SCALE: 1"=1'–0"

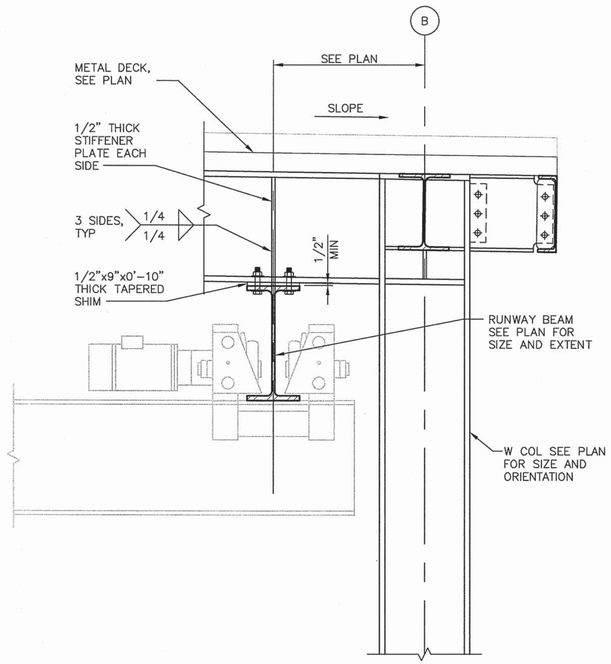


**NOTE:**
SEE PLAN FOR BEAM SIZES, TYPICAL.

## DETAIL 2
SCALE: 1"=1'–0"

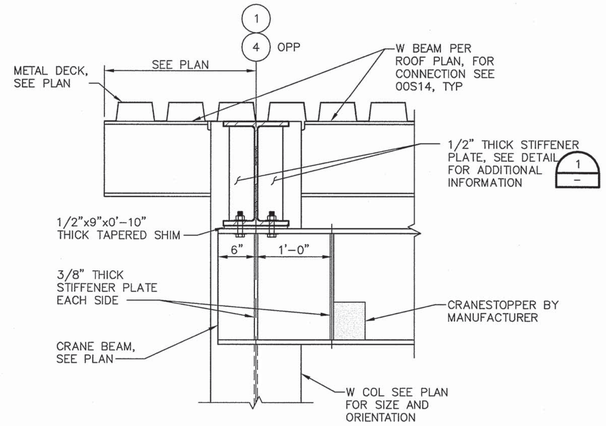


## DETAIL 3
SCALE: 1"=1'–0"

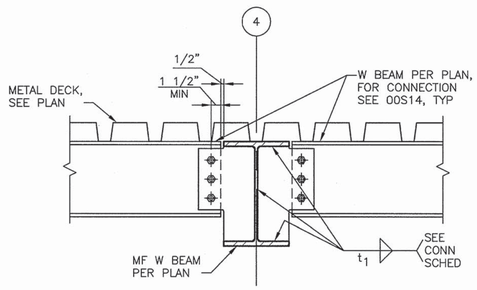


## BEAM TO GIRDER CONN @ HORIZ BRACE
SCALE: 1"=1'–0"

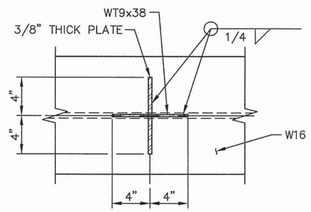


## DETAIL 5
SCALE: 1 1/2"=1'–0"

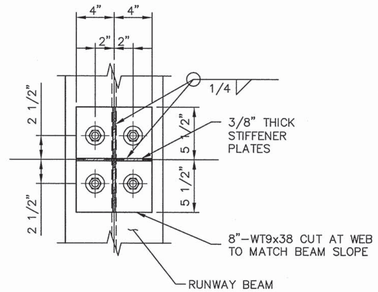


## DETAIL 6
SCALE: 1 1/2"=1'–0"

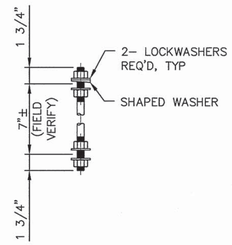


## DETAIL 7
SCALE: 1 1/2"=1'–0"

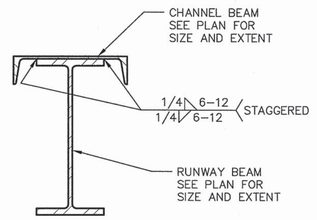


## DETAIL 8
SCALE: 1 1/2"=1'–0"

NOT FOR CONSTRUCTION

FILE: 215786–61S110.dwg
DATE: Jun 30, 2015–8:44:20am, jwebb

HDR Engineering, Inc.

| ISSUE | DATE | DESCRIPTION |
|---|---|---|
| A | JUNE 2015 | ISSUED FOR BID |

| | |
|---|---|
| PROJECT MANAGER | C. OLSON |
| DESIGNED | M. MOSTAFA |
| DESIGNED | |
| CHECKED | O. TAVANGAR |
| DRAWN | D. ELDREDGE |
| DATE | JUNE 30, 2015 |
| PROJECT NUMBER | 215786 |

REGISTERED PROFESSIONAL ENGINEER
MOHAMMADREZA MOSTAFA
NO. 78649
EXP. 09/30/15
CIVIL
STATE OF CALIFORNIA
06/30/15

CITY OF PINOLE CALIFORNIA 1903

PINOLE/HERCULES
WATER POLLUTION
CONTROL PLANT UPGRADE
CLIENT PN

**STRUCTURAL**

**SOLIDS HANDLING BUILDING DETAILS - III**

0 1" 2"

| | |
|---|---|
| FILENAME | 215786–61S110 |
| SCALE | AS NOTED |

SHEET **61S110**

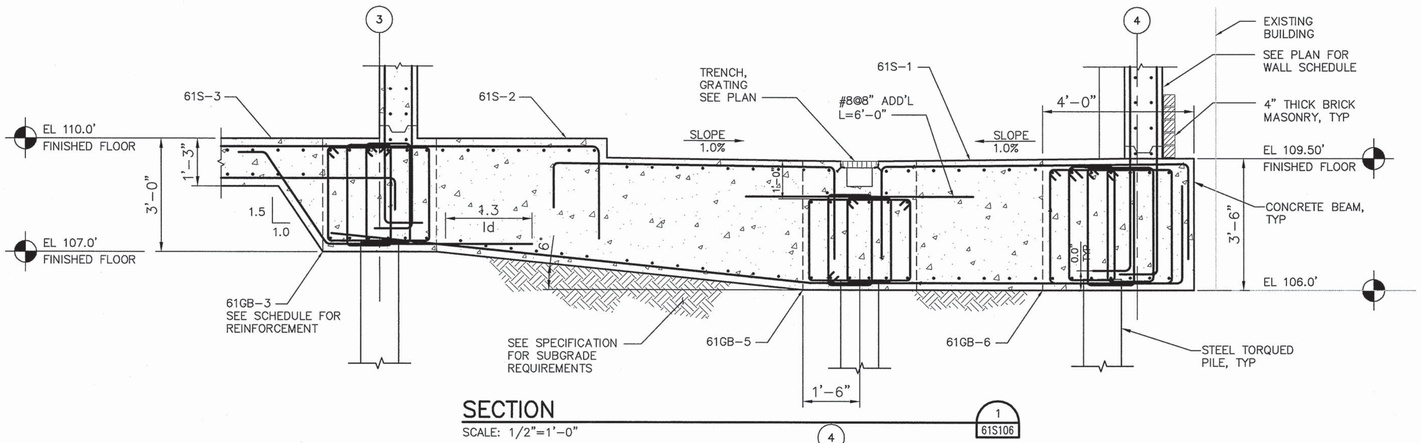


## SECTION

SCALE: 1/2"=1'-0"

1 / 61S106

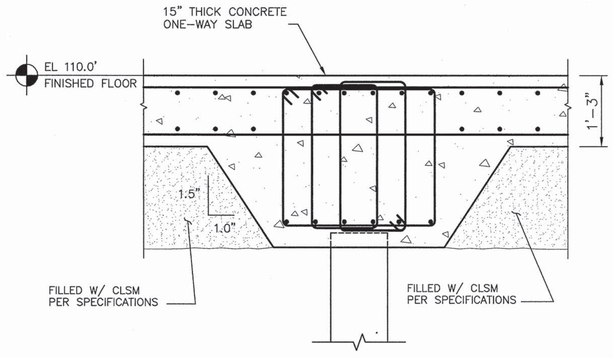


## SECTION

SCALE: 3/4"=1'-0"

2 / 61S106

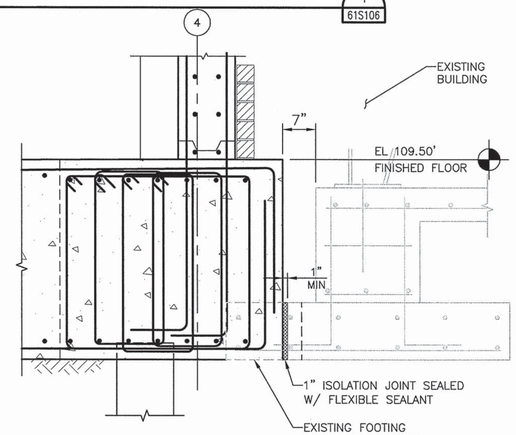


## SECTION

SCALE: 3/4"=1'-0"

3 / 61S102

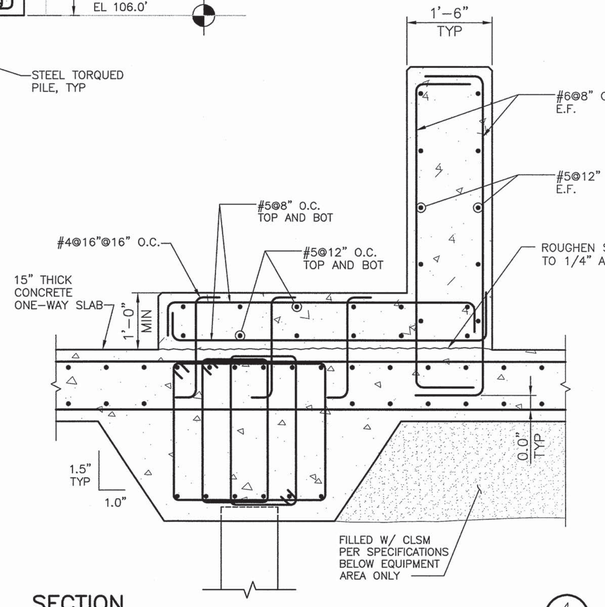


## SECTION

SCALE: 3/4"=1'-0"

4 / 61S106

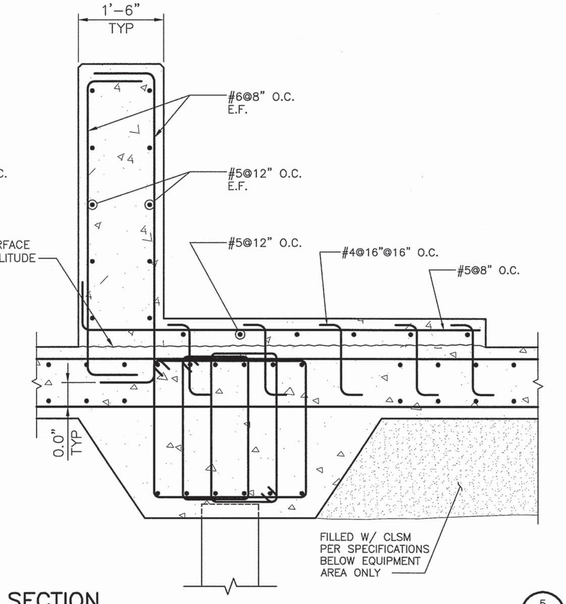


## SECTION

SCALE: 3/4"=1'-0"

5 / 61S106

NOT FOR CONSTRUCTION

FILE: 61S111 .dwg
DATE: Jun 30, 2015-8:45:24am, jwebb

HDR Engineering, Inc.

| ISSUE | DATE | DESCRIPTION |
|---|---|---|
| A | JUNE 2015 | ISSUED FOR BID |

| | |
|---|---|
| PROJECT MANAGER | C. OLSON |
| DESIGNED | M. MOSTAFA |
| DESIGNED | |
| CHECKED | O. TAVANGAR |
| DRAWN | D. ELDREDGE |
| DATE | JUNE 30, 2015 |
| PROJECT NUMBER | 215786 |

REGISTERED PROFESSIONAL ENGINEER MOHAMMADREZA MOSTAFA NO. 78649 EXP. 09/30/15 CIVIL STATE OF CALIFORNIA 06/30/15

CITY OF PINOLE CALIFORNIA 1903

PINOLE/HERCULES
WATER POLLUTION
CONTROL PLANT UPGRADE
CLIENT PN

**STRUCTURAL**

**SOLIDS HANDLING BUILDING SECTIONS AND DETAILS - III**

0 1" 2"

| | |
|---|---|
| FILENAME | 61S111 |
| SCALE | AS NOTED |

SHEET **61S111**

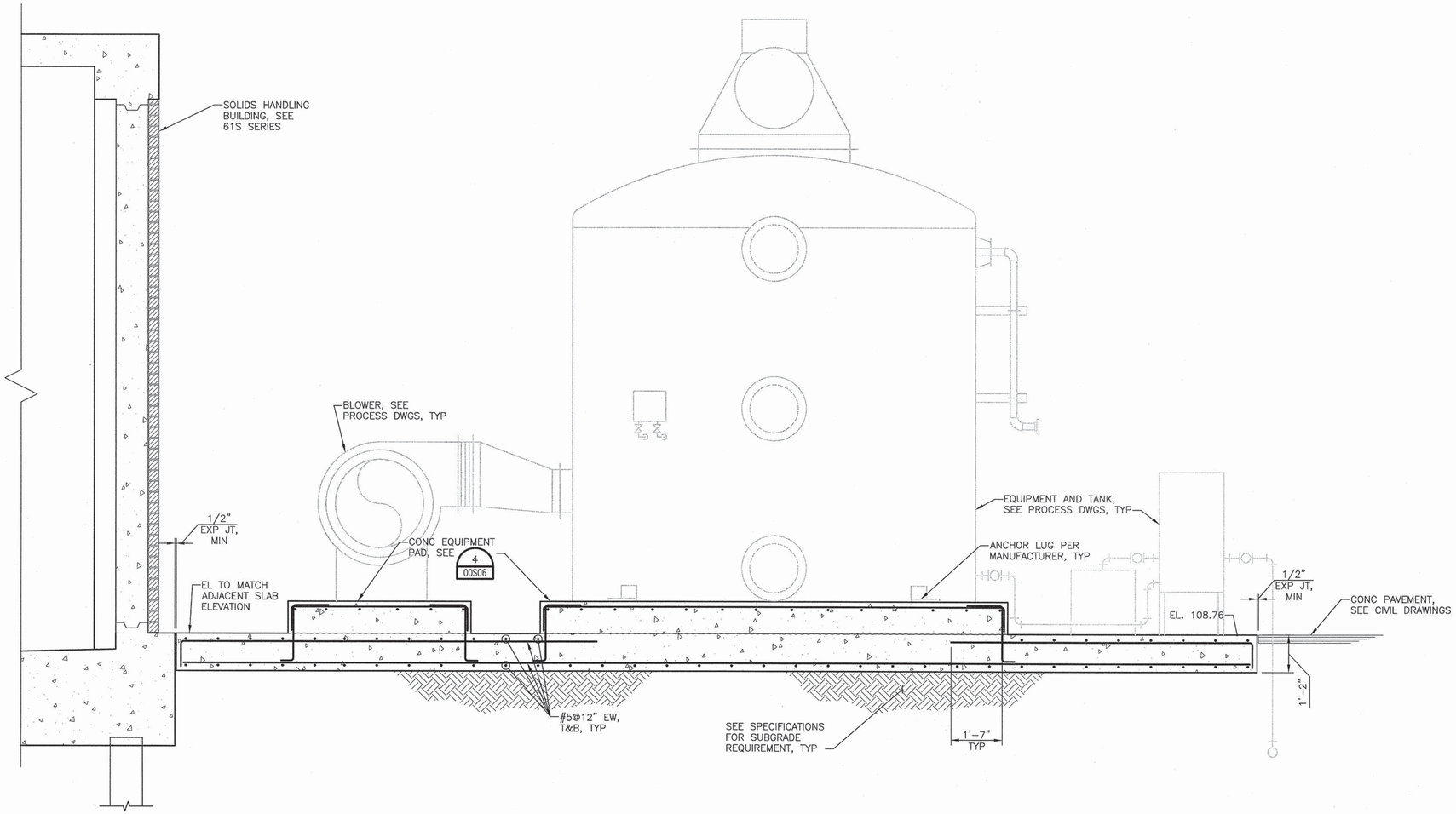


## ODOR CONTROL PAD SECTION

SCALE: 1/2"=1'-0"

B 64S102

FILE: 63S101.dwg
DATE: Jun 29, 2015 - 8:58:03pm, zhli

HDR Engineering, Inc.

| ISSUE | DATE | DESCRIPTION |
|---|---|---|
| A | JUNE 2015 | ISSUED FOR BID |

| | |
|---|---|
| PROJECT MANAGER | C. OLSON |
| DESIGNED | Z. LI |
| DESIGNED | |
| CHECKED | O. TAVANGAR |
| DRAWN | D. ELDREDGE |
| DATE | JUNE 30, 2015 |
| PROJECT NUMBER | 215786 |

REGISTERED PROFESSIONAL ENGINEER
ZHEN LI
NO. 74809
EXP. 12/31/15
6/30/2015
CIVIL
STATE OF CALIFORNIA

CITY OF PINOLE CALIFORNIA 1903

PINOLE/HERCULES
WATER POLLUTION
CONTROL PLANT UPGRADE
CLIENT PN

**STRUCTURAL**
**ODOR CONTROL PAD**
**SECTION**

0 1" 2"

| | |
|---|---|
| FILENAME | 63S101 |
| SCALE | AS NOTED |

SHEET **63S101**

**NOTES:**

1. FOR GENERAL NOTES, SEE SHEET 00S01 AND 00S02.
2. FOR SPECIAL INSPECTION REQUIREMENTS, SEE 00S03 AND 00S04.
3. FOR TYPICAL CONCRETE DETAILS, SEE SHEETS 00S05 THRU 00S08.
4. FOR TYPICAL REINFORCING DETAILS, SEE 00S09.
5. COORDINATE PIPING LOCATION, ORIENTATION, ELEVATIONS, AND CONCRETE PENETRATIONS WITH PROCESS/MECHANICAL DRAWINGS.
6. REFER TO PROCESS DRAWINGS FOR LOCATIONS, AMOUNT AND DETAIL OF PRESSURE RELIEF VALVE.

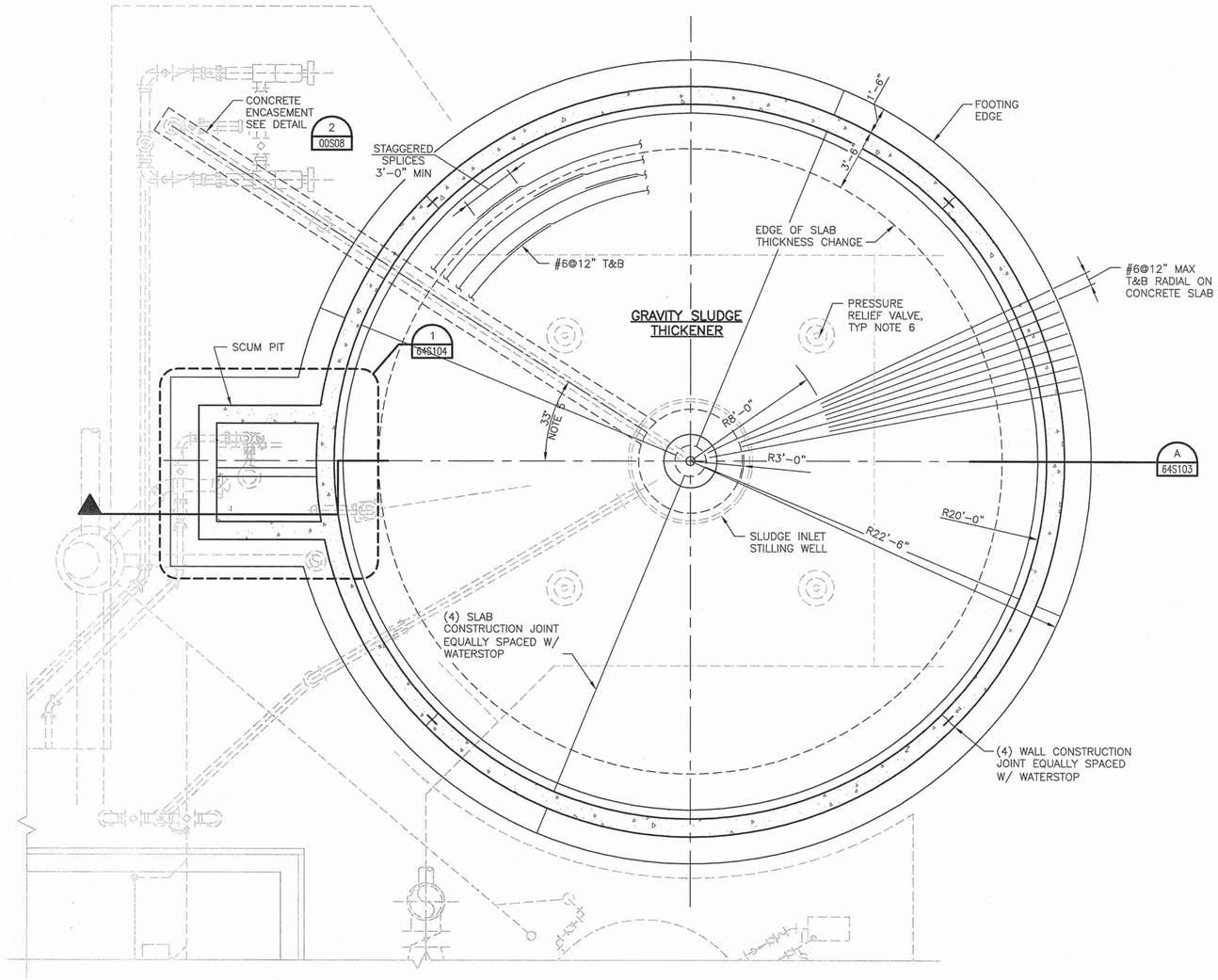


## GRAVITY SLUDGE THICKENER – FOUNDATION PLAN

SCALE: 1/4" = 1'-0"

TRUE NORTH

PROJECT NORTH

FILE: 215786-64S101.dwg
DATE: Jun 29, 2015 - 3:56:26pm, jwebb

HDR Engineering, Inc.

| ISSUE | DATE | DESCRIPTION |
|---|---|---|
| A | JUNE 2015 | ISSUED FOR BID |

| | |
|---|---|
| PROJECT MANAGER | C. OLSON |
| DESIGNED | Z. LI |
| DESIGNED | |
| CHECKED | O. TAVANGAR |
| DRAWN | D. ELDREDGE |
| DATE | JUNE 30, 2015 |
| PROJECT NUMBER | 215786 |

REGISTERED PROFESSIONAL ENGINEER — ZHEN LI — NO. 74809 — EXP. 12/31/15 — CIVIL — STATE OF CALIFORNIA

CITY OF PINOLE CALIFORNIA — 1903

PINOLE/HERCULES WATER POLLUTION CONTROL PLANT UPGRADE CLIENT PN

**STRUCTURAL**

**GRAVITY SLUDGE THICKENER FOUNDATION PLAN**

0 1" 2"

| | |
|---|---|
| FILENAME | 215786-64S101 |
| SCALE | AS NOTED |

SHEET **64S101**

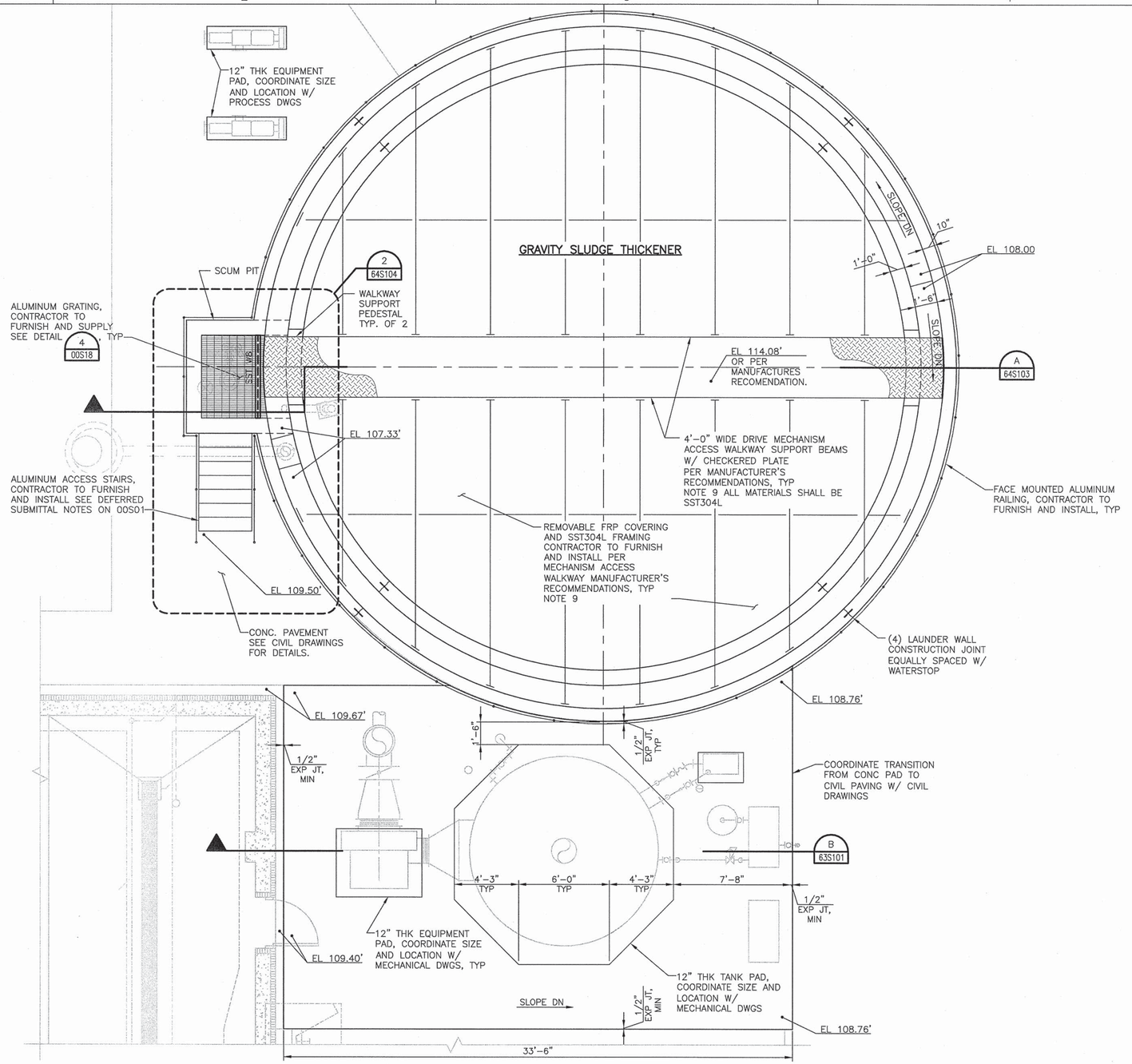


## GRAVITY SLUDGE THICKENER – TOP PLAN

SCALE: 1/4" = 1'-0"

**NOTES:**

1. FOR GENERAL NOTES, SEE SHEET 00S01 AND 00S02.
2. FOR SPECIAL INSPECTION REQUIREMENTS, SEE 00S03 AND 00S04.
3. FOR TYPICAL CONCRETE DETAILS, SEE SHEETS 00S05 THRU 00S08.
4. FOR TYPICAL REINFORCING DETAILS, SEE 00S09.
5. COORDINATE PIPING LOCATION, ORIENTATION, ELEVATIONS, AND CONCRETE PENETRATIONS WITH PROCESS/MECHANICAL DRAWINGS.
6. FOR TYPICAL GRATING DETAILS, SEE SHEET 00S18.
7. FOR TYPICAL RAILING DETAILS, SEE SHEET 00S19 AND 00S20.
8. EL XX.XX' DENOTES TOP OF CONCRETE ELEVATION.
9. CONTRACTOR SHALL DESIGN WALKWAY, FRP COVERING, AND THEIR FRAMING, SUPPORTS PER DEFERRED APPROVAL NOTES IN SHEET 00S01.

TRUE NORTH

PROJECT NORTH

FILE: 215786-64S102.dwg
DATE: Jun 29, 2015 - 2:58:31pm, jwebb

HDR Engineering, Inc.

| ISSUE | DATE | DESCRIPTION |
|---|---|---|
| A | JUNE 2015 | ISSUED FOR BID |

| | |
|---|---|
| PROJECT MANAGER | C. OLSON |
| DESIGNED | Z. LI |
| DESIGNED | |
| CHECKED | O. TAVANGAR |
| DRAWN | D. ELDREDGE |
| DATE | JUNE 30, 2015 |
| PROJECT NUMBER | 215786 |

REGISTERED PROFESSIONAL ENGINEER — ZHEN LI — NO. 74809 — EXP. 12/31/15 — CIVIL — STATE OF CALIFORNIA

CITY OF PINOLE CALIFORNIA 1903

PINOLE/HERCULES WATER POLLUTION CONTROL PLANT UPGRADE CLIENT PN

**STRUCTURAL**

**GRAVITY SLUDGE THICKENER TOP PLAN**

0 1" 2"

| | |
|---|---|
| FILENAME | 215786-64S102 |
| SCALE | AS NOTED |

SHEET **64S102**

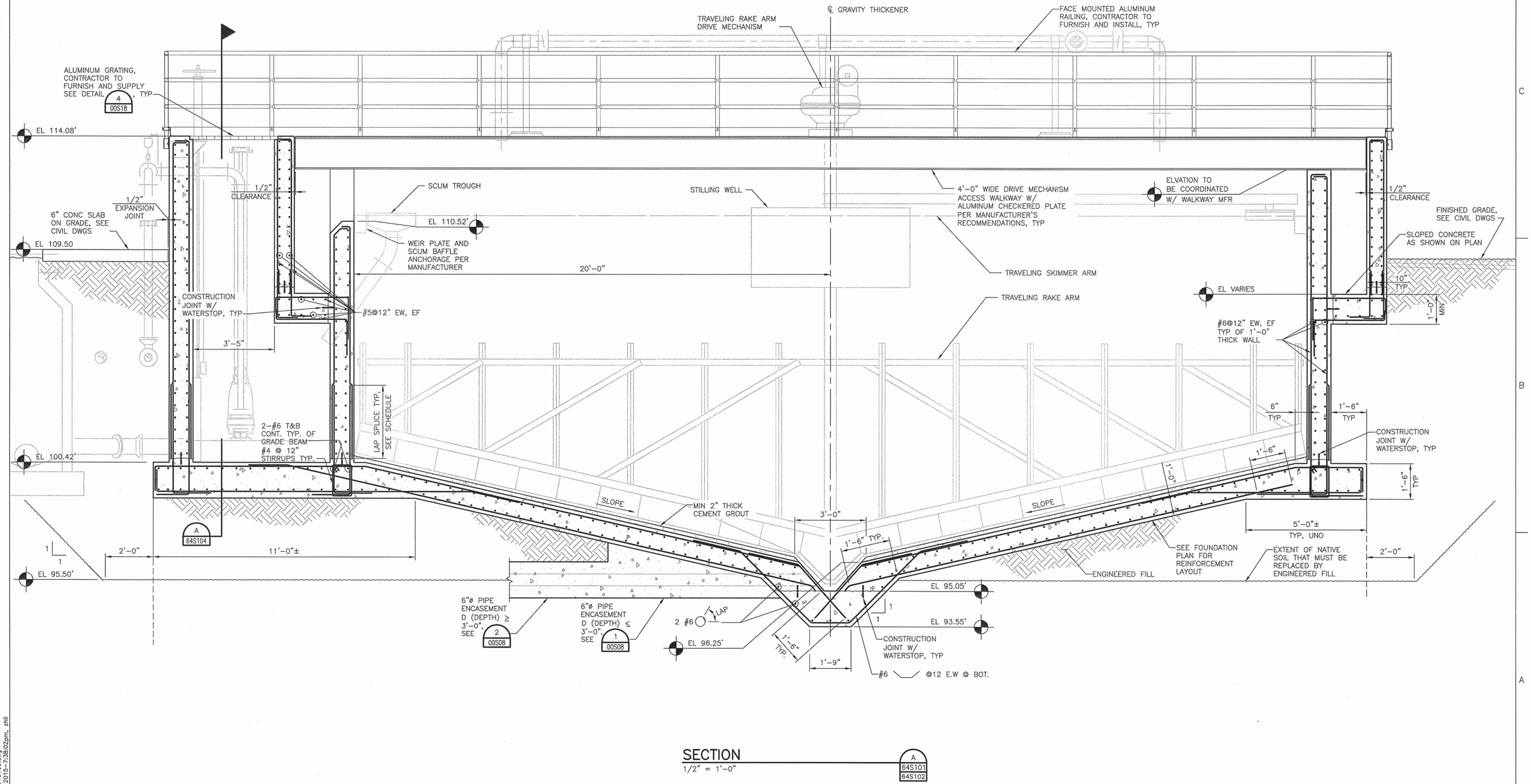


## SECTION

1/2" = 1'-0"

A 64S101 64S102

FILE: 215786-64S103.dwg
DATE: Jun 29, 2015-7:28:02pm, zhli

HDR Engineering, Inc.

| ISSUE | DATE | DESCRIPTION |
|---|---|---|
| A | JUNE 2015 | ISSUED FOR BID |

| | |
|---|---|
| PROJECT MANAGER | C. OLSON |
| | |
| DESIGNED | Z. LI |
| DESIGNED | |
| CHECKED | O. TAVANGAR |
| DRAWN | D. ELDREDGE |
| DATE | JUNE 30, 2015 |
| | |
| PROJECT NUMBER | 215786 |

REGISTERED PROFESSIONAL ENGINEER ZHEN LI NO. 74809 EXP. 12/31/15 CIVIL STATE OF CALIFORNIA 6/30/2015

CITY OF PINOLE CALIFORNIA 1903

PINOLE/HERCULES WATER POLLUTION CONTROL PLANT UPGRADE CLIENT PN

**STRUCTURAL**

**GRAVITY SLUDGE THICKENER SECTION**

0 1" 2"

| | |
|---|---|
| FILENAME | 215786-64S103 |
| SCALE | AS NOTED |

SHEET **64S103**

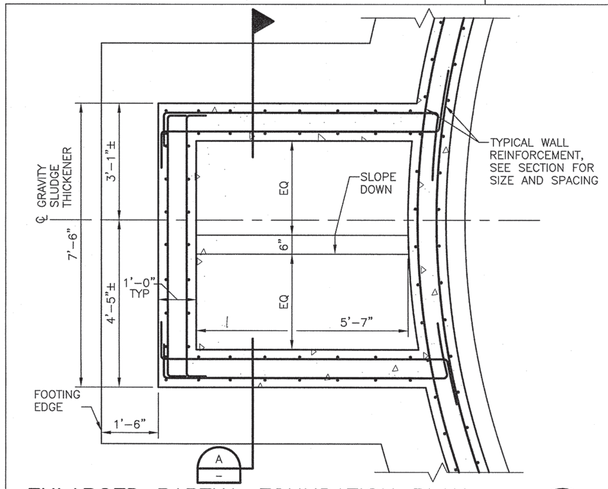


## ENLARGED PARTIAL FOUNDATION PLAN

SCALE: 1/2"=1'-0"

1 / 64S101

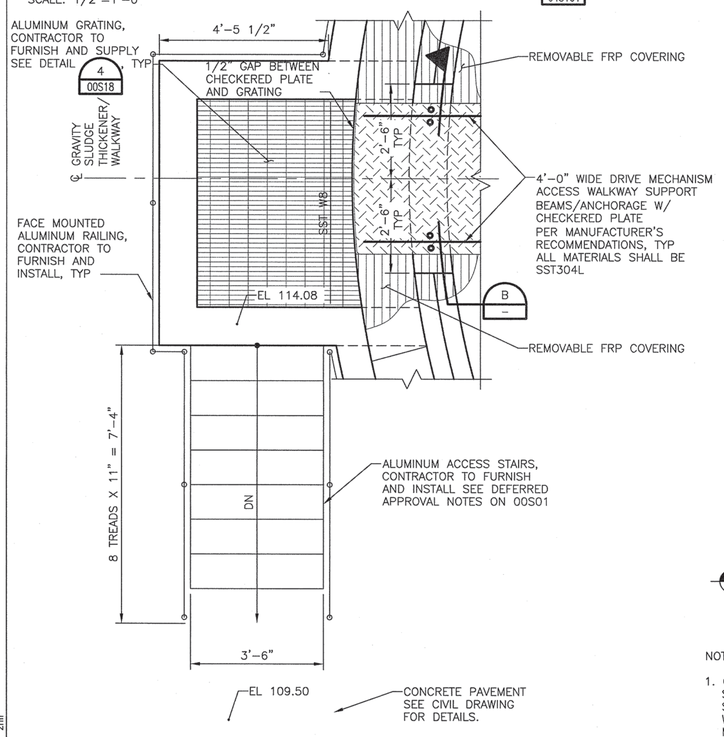


## ENLARGED PARTIAL TOP PLAN

SCALE: 1/2"=1'-0"

2 / 64S102

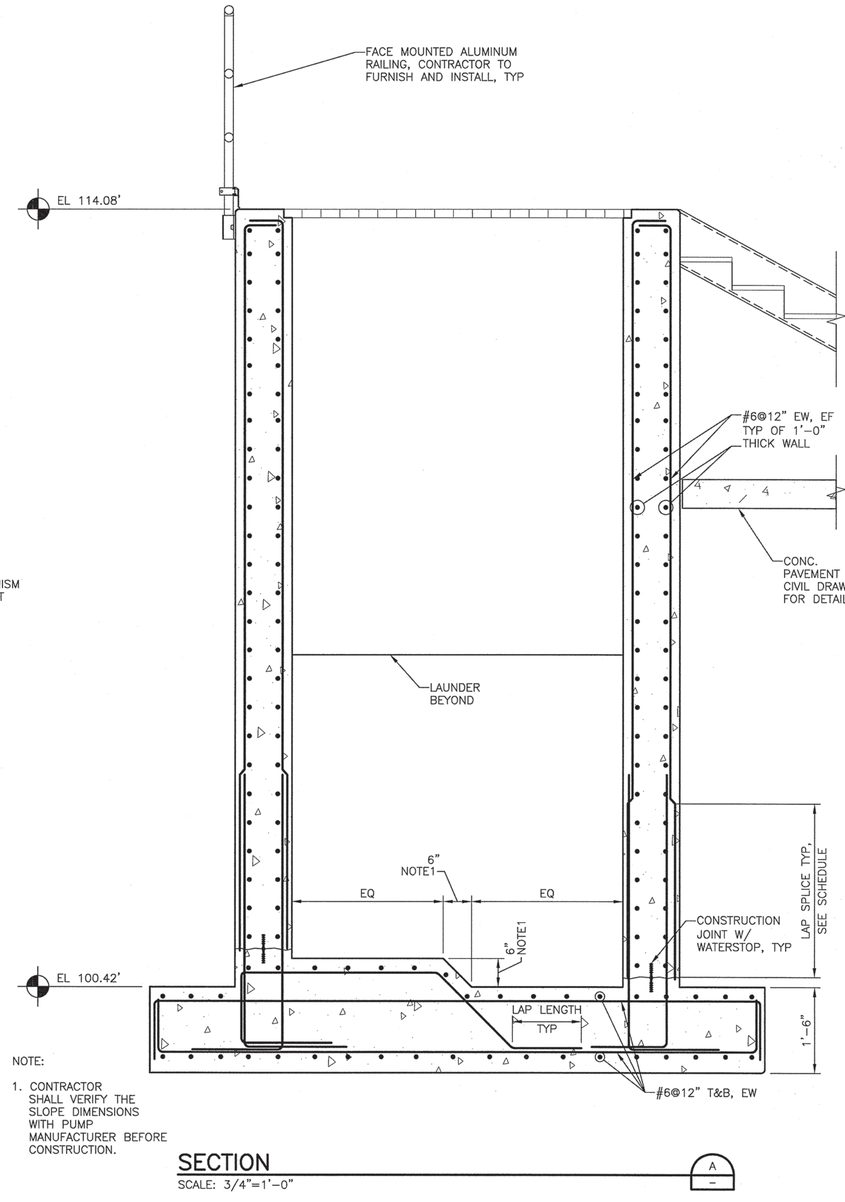


NOTE:

1. CONTRACTOR SHALL VERIFY THE SLOPE DIMENSIONS WITH PUMP MANUFACTURER BEFORE CONSTRUCTION.

## SECTION

SCALE: 3/4"=1'-0"

A

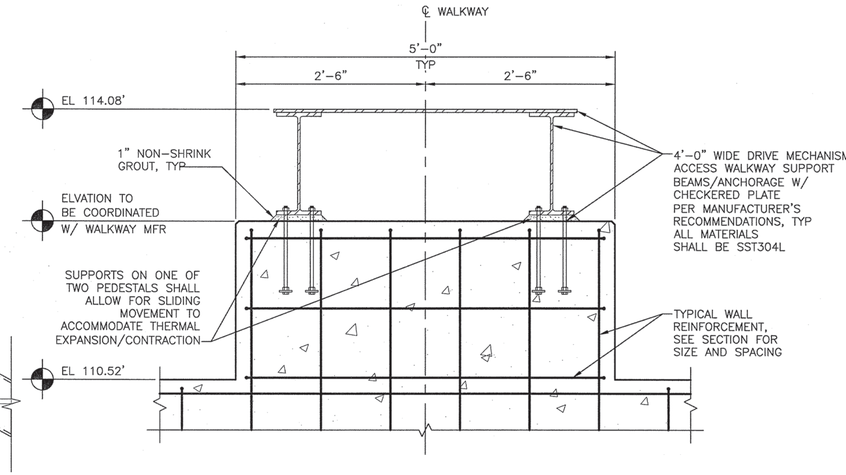


## SECTION

SCALE: 1"=1'-0"

B

FILE: 215786-64S104.dwg
DATE: Jun 29, 2015 - 7:32:07pm, zhli

HDR Engineering, Inc.

| ISSUE | DATE | DESCRIPTION |
|---|---|---|
| | | |
| | | |
| | | |
| | | |
| | | |
| | | |
| A | JUNE 2015 | ISSUED FOR BID |

| | |
|---|---|
| PROJECT MANAGER | C. OLSON |
| | |
| DESIGNED | Z. LI |
| DESIGNED | |
| CHECKED | C. OLSON |
| DRAWN | S. LARI |
| DATE | JUNE 30, 2015 |
| | |
| PROJECT NUMBER | 215786 |

REGISTERED PROFESSIONAL ENGINEER
ZHEN LI
NO. 74809
EXP. 12/31/15
6/30/2015
CIVIL
STATE OF CALIFORNIA

CITY OF PINOLE CALIFORNIA 1903

PINOLE/HERCULES
WATER POLLUTION
CONTROL PLANT UPGRADE
CLIENT PN

**STRUCTURAL**

**GRAVITY SLUDGE THICKENER ENLARGED PLAN AND SECTIONS**

0 1" 2"

| | |
|---|---|
| FILENAME | 215786-64S104 |
| SCALE | AS NOTED |

SHEET **64S104**

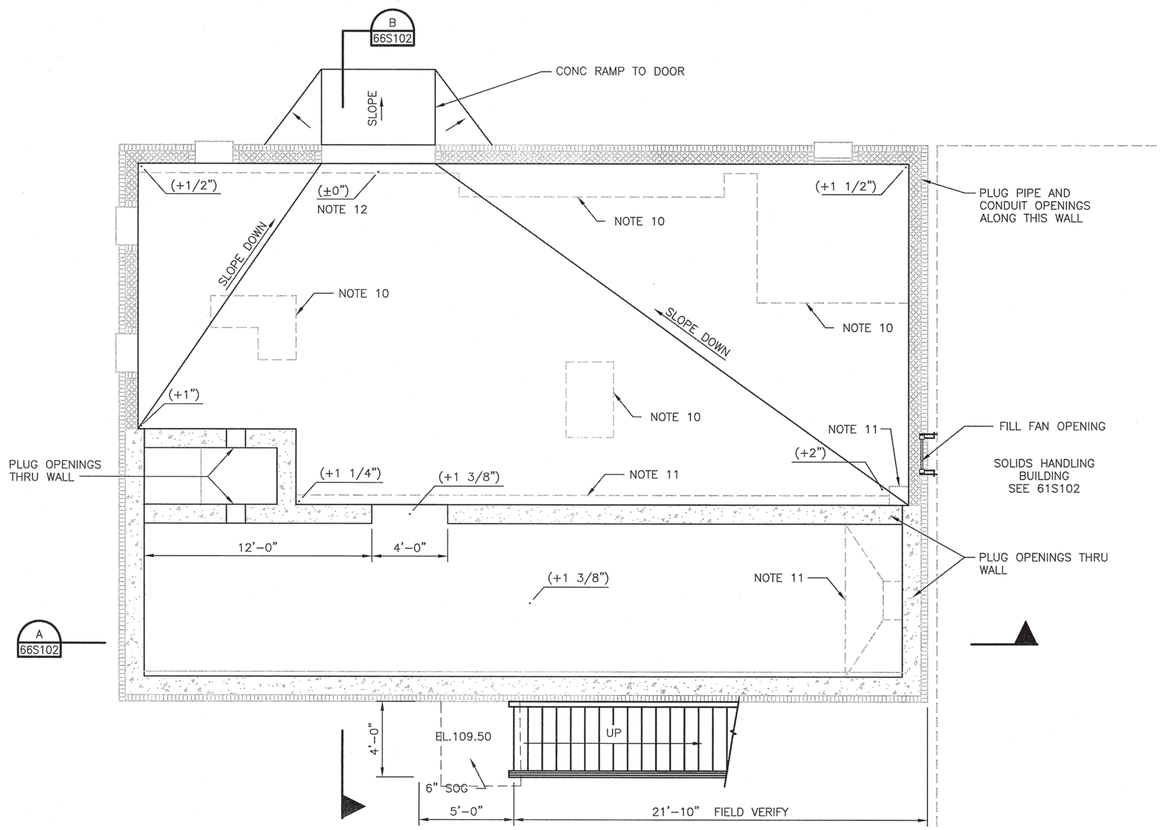


## FLOOR PLAN

1/4" = 1'–0"

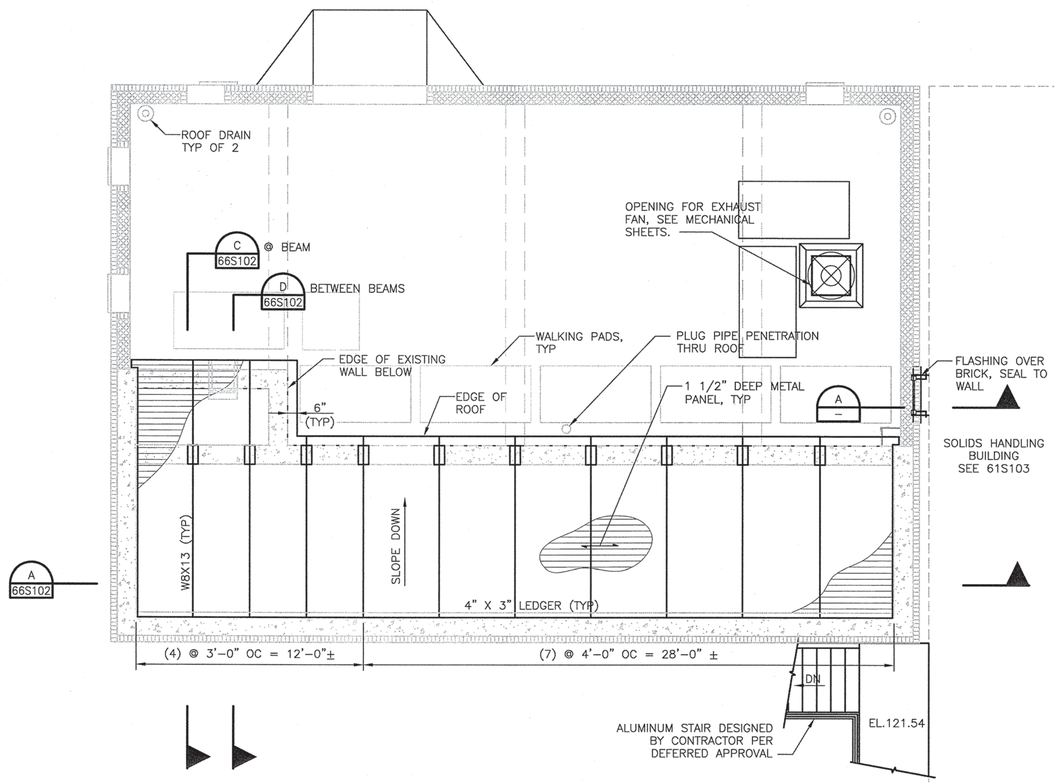


## ROOF PLAN

1/4" = 1'–0"

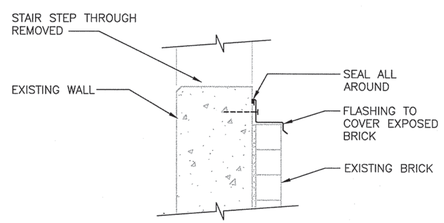


## ROOF PLAN

NTS

A
–

NOTES:

1. FOR GENERAL NOTES, SEE SHEET 00S01 AND 00S02.
2. SEE SHEET 66D101, 66D102 FOR DEMOLITION DETAIL.
3. FOR SPECIAL INSPECTION REQUIREMENTS, SEE 00S03 AND 00S04.
4. FOR TYPICAL CONCRETE DETAILS, SEE SHEETS 00S05 THRU 00S08.
5. FOR TYPICAL REINFORCING DETAILS, SEE 00S09
6. FOR TYPICAL METAL DECK DETAILS, SEE SHEET 00S17.
7. FOR TYPICAL STEEL DETAILS, SEE SHEET 00S14 THRU 00S16.
8. DENOTES BRICK VENEER.
9. DENOTES CMU WALL
10. DEPRESSIONS AFTER DEMOLITION OF EXISTING CONCRETE PAD SHALL BE FILLED WITH CEMENT GROUT TO MEET FLOOR SLOPE REQUIREMENT.
11. EXISTING SUMPS AND TRENCHES SHALL BE FILLED WITH CONCRETE TO MEET FLOOR SLOPE REQUIREMENT.
12. CONCRETE SLABTOP ELEVATION NEXT TO ROUGHENED CURB ENTRY IS REFERENCED AS +0". OTHER POINT ELEVATIONS NOTED AS (+X") IS RELATIVE TO THIS POINT ELEVATION.

FILE: 66S101.dwg
DATE: Jun 29, 2015–7:27:08pm, zhli

HDR Engineering, Inc.

| ISSUE | DATE | DESCRIPTION |
|---|---|---|
| A | JUNE 2015 | ISSUED FOR BID |

| | |
|---|---|
| PROJECT MANAGER | C. OLSON |
| DESIGNED | Z. LI |
| DESIGNED | |
| CHECKED | C. OLSON |
| DRAWN | S. LARI |
| DATE | JUNE 30, 2015 |
| PROJECT NUMBER | 215786 |

REGISTERED PROFESSIONAL ENGINEER
ZHEN LI
NO. 74809
EXP. 12/31/15
6/30/2015
CIVIL
STATE OF CALIFORNIA

CITY OF PINOLE CALIFORNIA 1903

PINOLE/HERCULES
WATER POLLUTION
CONTROL PLANT UPGRADE
CLIENT PN

**STRUCTURAL**

**MAINTENANCE SHOP**
**FLOOR AND ROOF PLANS**

0 1" 2"

| | |
|---|---|
| FILENAME | 66S101 |
| SCALE | AS NOTED |

SHEET
**66S101**

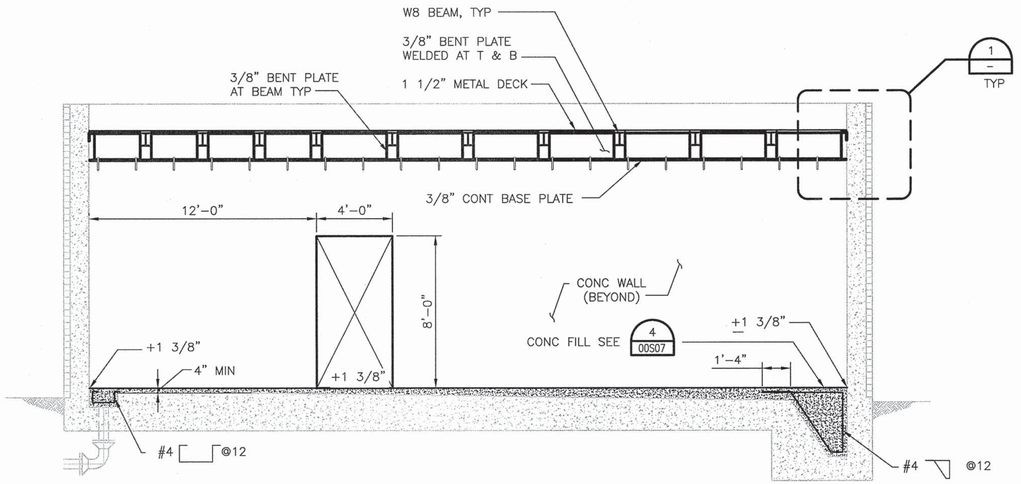


SECTION
1/4" = 1'-0"
A
66S101

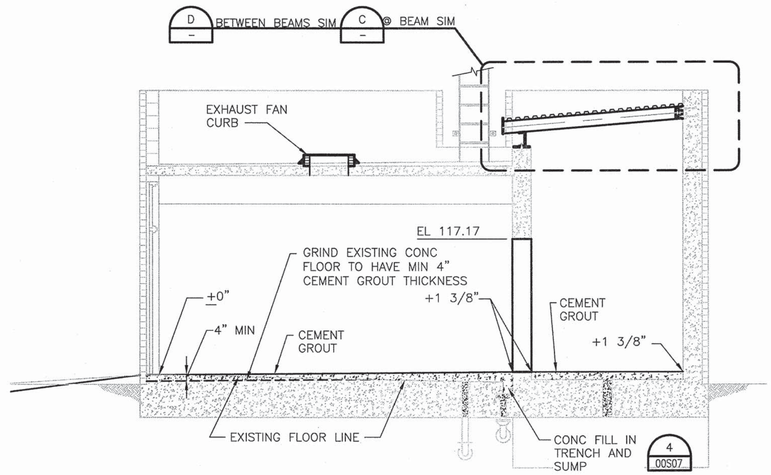


SECTION
1/4" = 1'-0"
B
66S101

NOTES:

1. FOR GENERAL NOTES, SEE SHEET 00S01 AND 00S02.
2. SEE SHEET 66D101, 66D102 FOR SITE DEMOLITION DETAIL.
3. FOR SPECIAL INSPECTION REQUIREMENTS, SEE 00S03 AND 00S04.
4. FOR TYPICAL CONCRETE DETAILS, SEE SHEETS 00S05 THRU 00S08.
5. FOR TYPICAL REINFORCING DETAILS, SEE 00S09
6. FOR TYPICAL METAL DECK DETAILS, SEE SHEET 00S17.
7. FOR TYPICAL STEEL DETAILS, SEE SHEET 00S14 THRU 00S16.
8. DENOTES BRICK VENEER.
9. DENOTES CMU WALL
10. DEPRESSIONS AFTER DEMOLITION OF EXISTING CONC PAD SHALL BE FILLED W/CEMENT GROUT TO MEET FLOOR SLOPE REQUIREMENT.
11. EXISTING SUMPS AND TRENCHES SHALL BE FILLED W/CONC TO MEET FLOOR SLOPE REQUIREMENT.
12. CONCRETE SLABTOP ELEVATION NEXT TO ROUGHENED CURB ENTRY IS REFERENCED AS ±0". OTHER POINT ELEVATIONS NOTED AS (+X") IS RELATIVE TO THIS POINT ELEVATION.

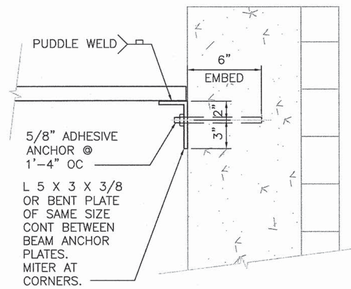


DETAIL
1-1/2" = 1'-0"
1

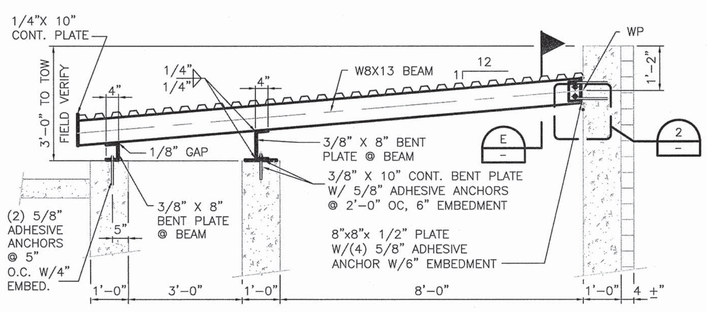


SECTION
1/2" = 1'-0"
C
66S101

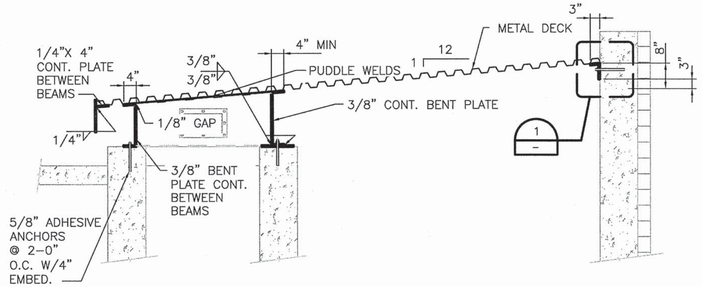


SECTION
1/2" = 1'-0"
D
66S101

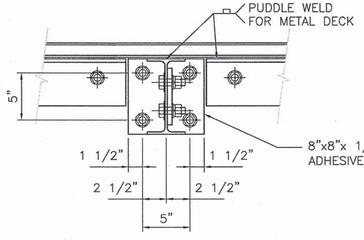


SECTION
1-1/2" = 1'-0"
E

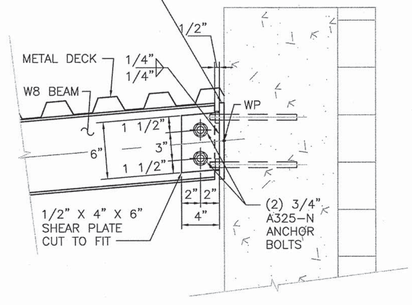


DETAIL
1-1/2" = 1'-0"
2

FILE: 66S102.dwg
DATE: Jun 29, 2015 - 6:44:01pm, zhli

HDR Engineering, Inc.

| ISSUE | DATE | DESCRIPTION |
|---|---|---|
| A | JUNE 2015 | ISSUED FOR BID |

| | |
|---|---|
| PROJECT MANAGER | C. OLSON |
| DESIGNED | Z. LI |
| DESIGNED | |
| CHECKED | C. OLSON |
| DRAWN | S.LARI |
| DATE | JUNE 30, 2015 |
| PROJECT NUMBER | 215786 |

REGISTERED PROFESSIONAL ENGINEER
ZHEN LI
NO. 74809
EXP. 12/31/15
6/30/2015
CIVIL
STATE OF CALIFORNIA

CITY OF PINOLE CALIFORNIA 1903

PINOLE/HERCULES
WATER POLLUTION
CONTROL PLANT UPGRADE
CLIENT PN

**STRUCTURAL**

**MAINTENANCE SHOP SECTIONS AND DETAILS**

0 1" 2"

| | |
|---|---|
| FILENAME | 66S102 |
| SCALE | AS NOTED |

SHEET
**66S102**

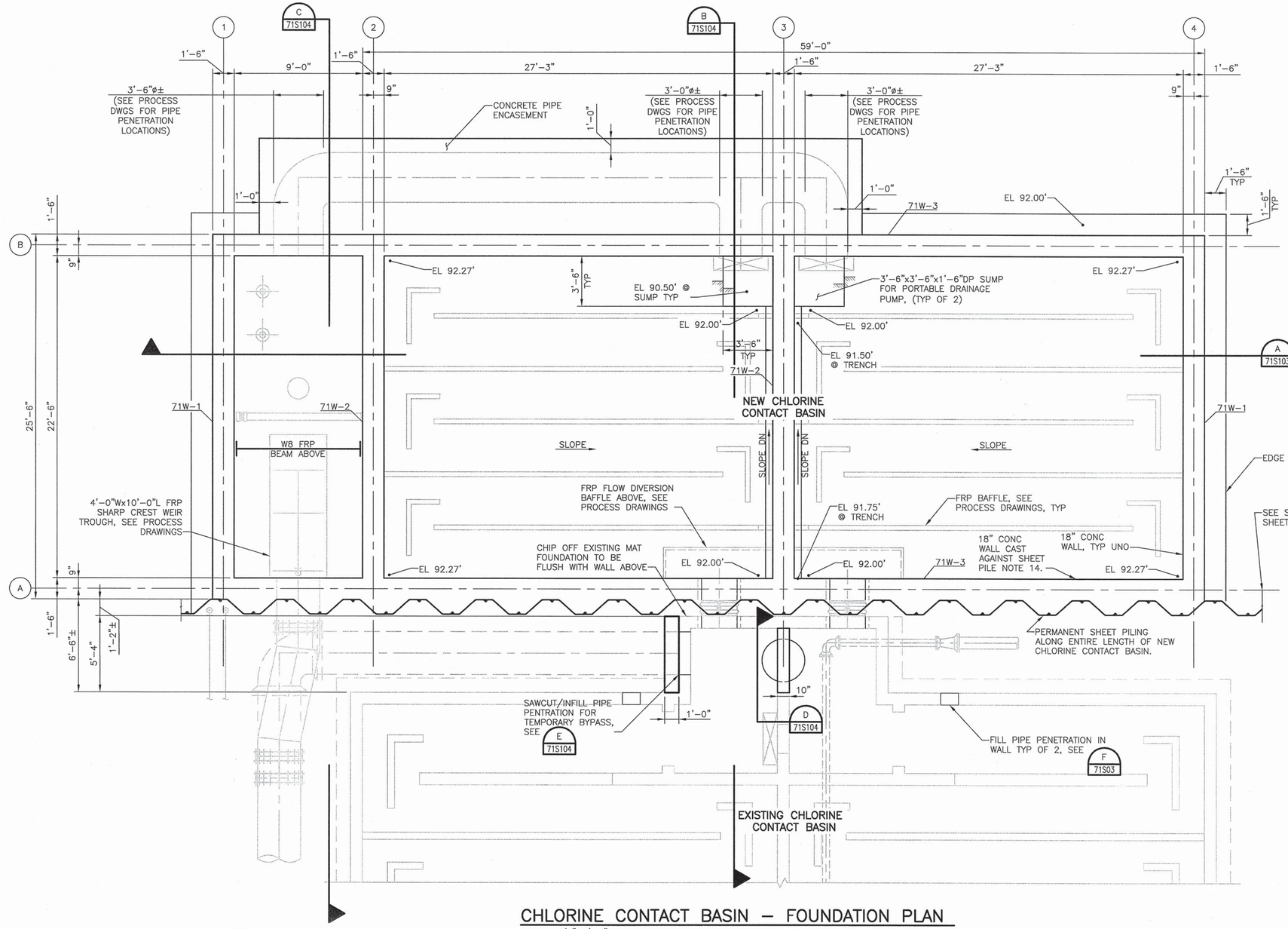


## CHLORINE CONTACT BASIN – FOUNDATION PLAN

SCALE: 1/4"=1'-0"

**NOTES:**

1. FOR GENERAL NOTES, SEE SHEET 00S01 AND 00S02.
2. FOR SPECIAL INSPECTION REQUIREMENTS, SEE 00S03 AND 00S04.
3. FOR TYPICAL CONCRETE DETAILS, SEE SHEETS 00S05 THRU 00S08.
4. FOR TYPICAL REINFORCING DETAILS, SEE 00S09.
5. FOR TYPICAL CONCRETE BEAM, SLAB, AND WALL DETAILS AND SCHEDULES, SEE SHEETS 00S11 AND 00S12.
6. FOR TYPICAL GRATING DETAILS, SEE SHEET 00S18.
7. FOR TYPICAL RAILING DETAILS, SEE SHEET 00S19 AND 00S20.
8. "71S–X" DENOTES CONCRETE SLAB. SEE SHEET 00S05 AND 00S12 FOR DETAILS AND SCHEDULE.
9. "71B–X" DENOTES CONCRETE BEAM. SEE SHEET 00S12 FOR DETAILS AND SCHEDULE.
10. "71W–X" DENOTES CONCRETE WALL. SEE SHEET 00S11 FOR WALL REINFORCING SCHEDULE.
11. DENOTES CHANGE IN TOP OF CONCRETE ELEVATION.
12. ALL WALLS ARE CENTERED ON GRID LINES, UNLESS NOTED OTHERWISE.
13. CONTRACTOR TO DESIGN FRP BAFFLE WALLS AND THEIR SUPPORTS. SEE DEFERRED APPROVALS IN GENERAL STRUCTURAL NOTES FOR DETAILED REQUIREMENT.
14. PERMANENT SHEET PILES BY CONTRACTOR. ADJACENT CONCRETE WALL WILL BE CAST AGAINST SHEET PILE TO LEVEL OF EXISTING ADJACENT FOUNDATION.

TRUE NORTH

PROJECT NORTH

FILE: 215786_71S101.dwg
DATE: Jun 29, 2015–6:38:20pm, zhli

HDR Engineering, Inc.

| ISSUE | DATE | DESCRIPTION |
|---|---|---|
| A | JUNE 2015 | ISSUED FOR BID |

| | |
|---|---|
| PROJECT MANAGER | C. OLSON |
| DESIGNED | Z. LI |
| DESIGNED | |
| CHECKED | C. OLSON |
| DRAWN | D. ELDREDGE |
| DATE | JUNE 30, 2015 |
| PROJECT NUMBER | 215786 |

REGISTERED PROFESSIONAL ENGINEER
ZHEN LI
NO. 74809
EXP. 12/31/15
6/30/2015
CIVIL
STATE OF CALIFORNIA

CITY OF PINOLE CALIFORNIA 1903

PINOLE/HERCULES WATER POLLUTION CONTROL PLANT UPGRADE
CLIENT PN

**STRUCTURAL**

**CHLORINE CONTACT BASIN FOUNDATION PLAN**

0 1" 2"

| | |
|---|---|
| FILENAME | 215786–71S101 |
| SCALE | AS NOTED |

SHEET 71S101

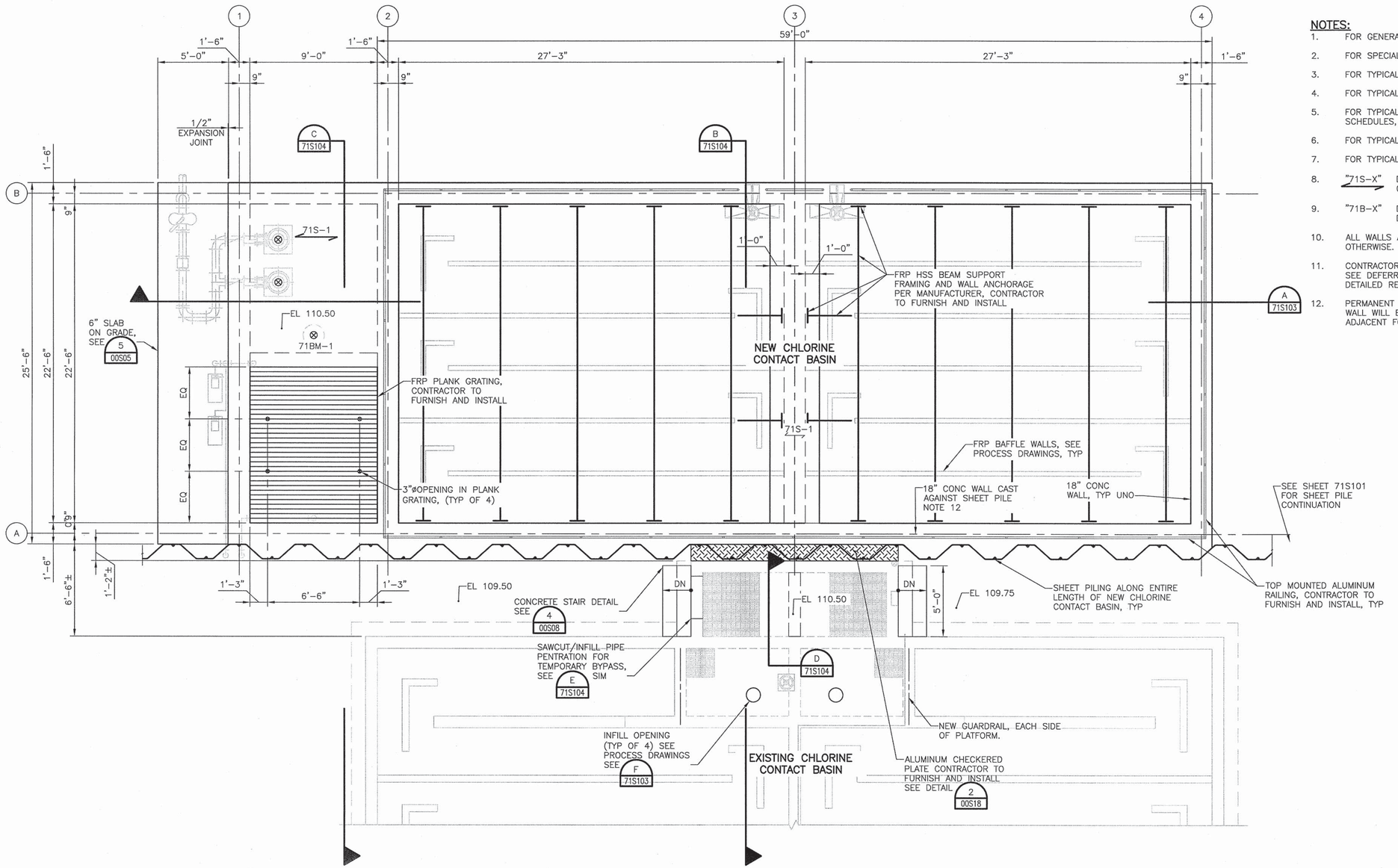


## NOTES:

1. FOR GENERAL NOTES, SEE SHEET 00S01 AND 00S02.
2. FOR SPECIAL INSPECTION REQUIREMENTS, SEE 00S03 AND 00S04.
3. FOR TYPICAL CONCRETE DETAILS, SEE SHEETS 00S05 THRU 00S08.
4. FOR TYPICAL REINFORCING DETAILS, SEE 00S09.
5. FOR TYPICAL CONCRETE BEAM, SLAB, AND WALL DETAILS AND SCHEDULES, SEE SHEETS 00S11 AND 00S12.
6. FOR TYPICAL GRATING DETAILS, SEE SHEET 00S18.
7. FOR TYPICAL RAILING DETAILS, SEE SHEET 00S19 AND 00S20.
8. "71S-X" DENOTES CONCRETE SLAB. SEE SHEET 00S05 AND 00S12 FOR DETAILS AND SCHEDULE.
9. "71B-X" DENOTES CONCRETE BEAM. SEE SHEET 00S12 FOR DETAILS AND SCHEDULE.
10. ALL WALLS ARE CENTERED ON GRID LINES, UNLESS NOTED OTHERWISE.
11. CONTRACTOR TO DESIGN FRP BAFFLE WALLS AND THEIR SUPPORTS. SEE DEFERRED APPROVALS IN GENERAL STRUCTURAL NOTES FOR DETAILED REQUIREMENT.
12. PERMANENT SHEET PILES BY CONTRACTOR. ADJACENT CONCRETE WALL WILL BE CAST AGAINST SHEET PILE TO LEVEL OF EXISTING ADJACENT FOUNDATION.

## CHLORINE CONTACT BASIN – TOP PLAN

SCALE: 1/4"=1'-0"

TRUE NORTH

PROJECT NORTH

FILE: 215786-71S102.dwg
DATE: Jun 29, 2015-6:55:13pm, zhli

HDR Engineering, Inc.

| ISSUE | DATE | DESCRIPTION |
|---|---|---|
| A | JUNE 2015 | ISSUED FOR BID |

| | |
|---|---|
| PROJECT MANAGER | C. OLSON |
| | |
| DESIGNED | Z. LI |
| DESIGNED | |
| CHECKED | C. OLSON |
| DRAWN | D. ELDREDGE |
| DATE | JUNE 30, 2015 |
| | |
| PROJECT NUMBER | 215786 |

REGISTERED PROFESSIONAL ENGINEER
ZHEN LI
NO. 74809
EXP. 12/31/15
6/30/2015
CIVIL
STATE OF CALIFORNIA

CITY OF PINOLE CALIFORNIA 1903

PINOLE/HERCULES WATER POLLUTION CONTROL PLANT UPGRADE
CLIENT PN

**STRUCTURAL**

**CHLORINE CONTACT BASIN TOP PLAN**

0 1" 2"

| | |
|---|---|
| FILENAME | 215786-71S102 |
| SCALE | AS NOTED |

SHEET **71S102**

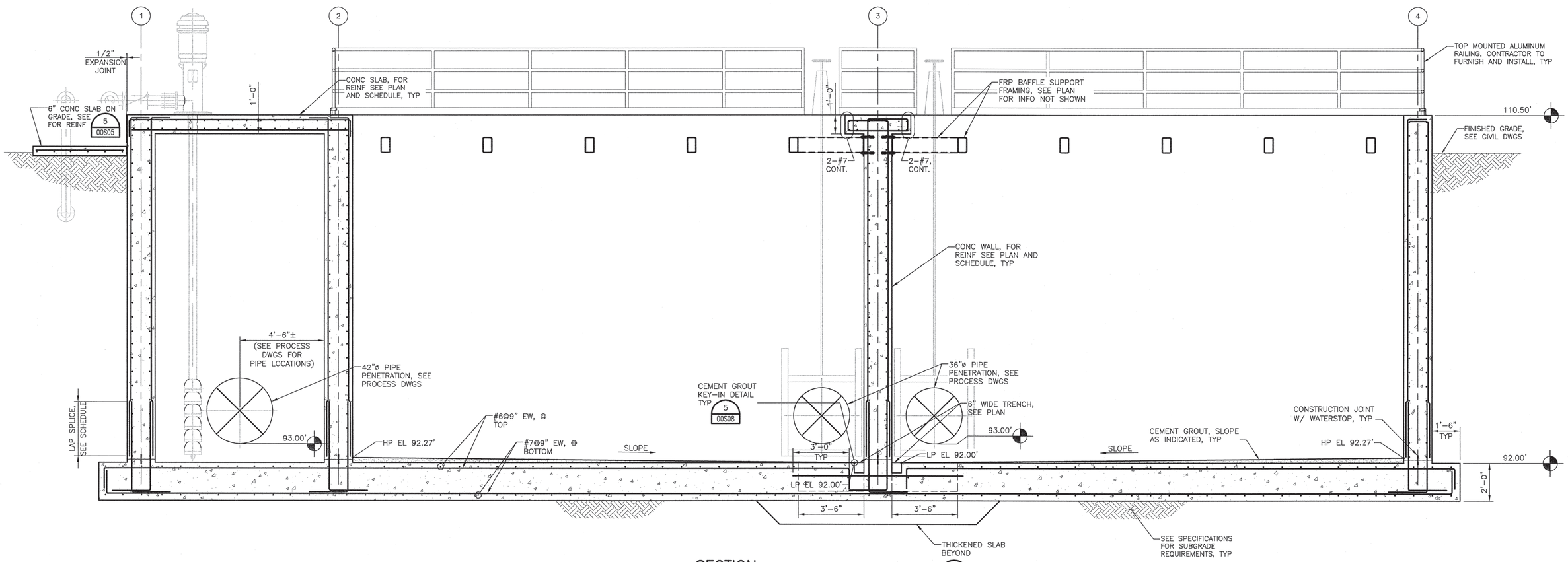


## SECTION
SCALE: 3/8"=1'-0"

A
71S101

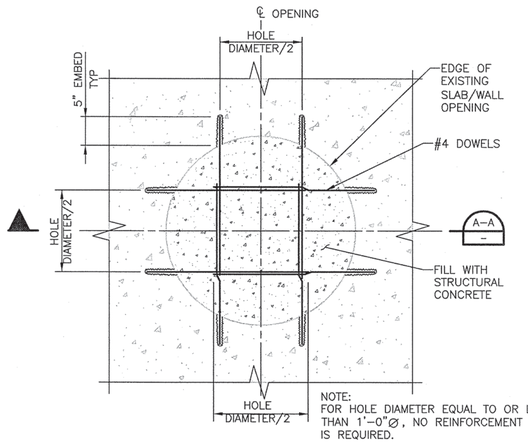


NOTE:
FOR HOLE DIAMETER EQUAL TO OR LESS THAN 1'-0"ø, NO REINFORCEMENT DOWEL IS REQUIRED.

## SECTION
SCALE: 1"=1'-0"

F
71S101

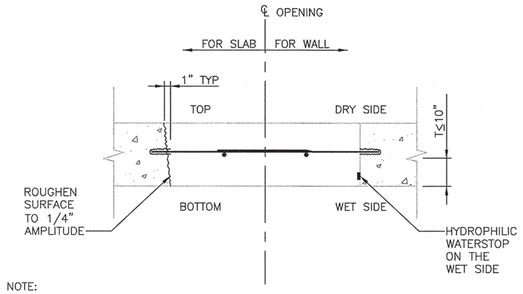


NOTE:
FOR HOLE DIAMETER EQUAL TO OR LESS THAN 1'-0"ø, NO REINFORCEMENT DOWEL IS REQUIRED.

## SECTION
SCALE: 1"=1'-0"

A-A

FILE: 215786-71S103.dwg
DATE: Jun 29, 2015 - 3:57:03pm, jwebb

HDR Engineering, Inc.

| ISSUE | DATE | DESCRIPTION |
|---|---|---|
| A | JUNE 2015 | ISSUED FOR BID |

| | |
|---|---|
| PROJECT MANAGER | C. OLSON |
| DESIGNED | Z. LI |
| DESIGNED | |
| CHECKED | C. OLSON |
| DRAWN | D. ELDREDGE |
| DATE | JUNE 30, 2015 |
| PROJECT NUMBER | 215786 |

REGISTERED PROFESSIONAL ENGINEER
ZHEN LI
NO. 74809
EXP. 12/31/15
6/30/2015
CIVIL
STATE OF CALIFORNIA

CITY OF PINOLE CALIFORNIA 1903

PINOLE/HERCULES WATER POLLUTION CONTROL PLANT UPGRADE
CLIENT PN

**STRUCTURAL**

**CHLORINE CONTACT BASIN - SECTIONS - 1**

0 1" 2"

| | |
|---|---|
| FILENAME | 215786-71S103 |
| SCALE | AS NOTED |

SHEET
**71S103**

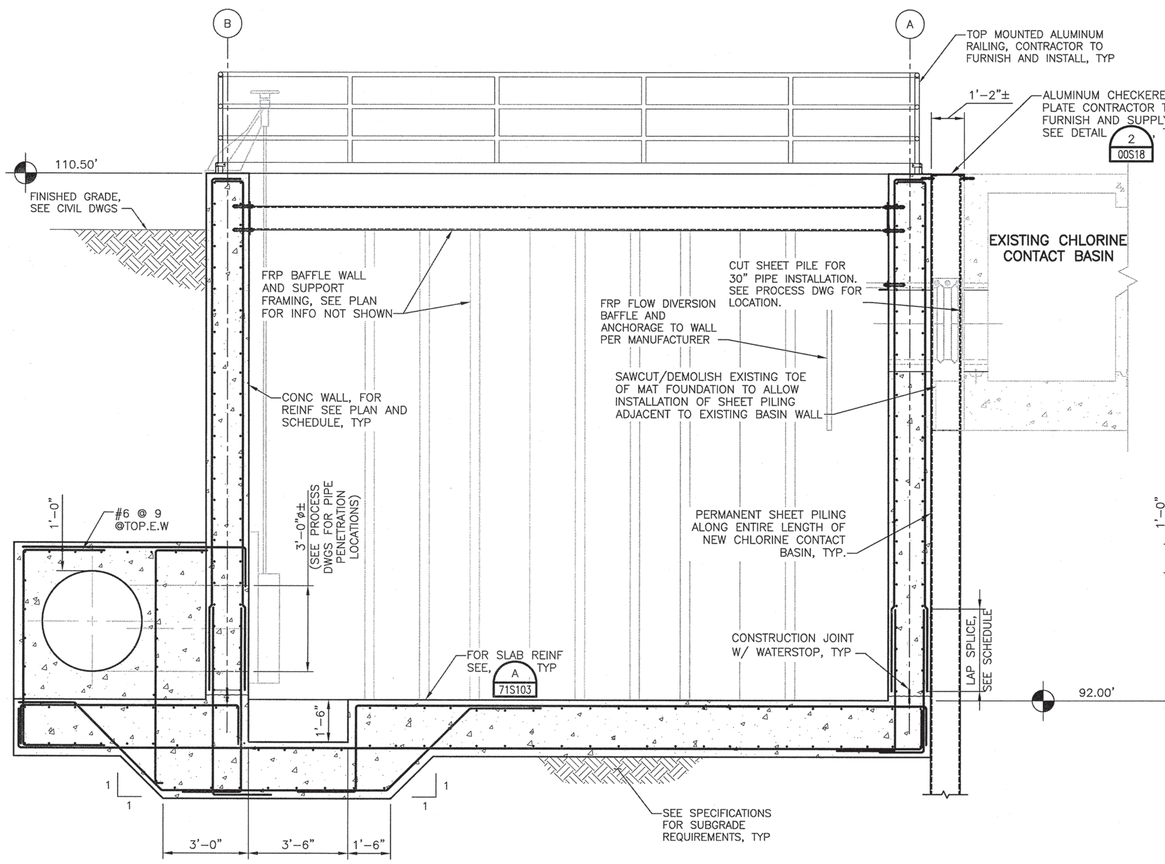


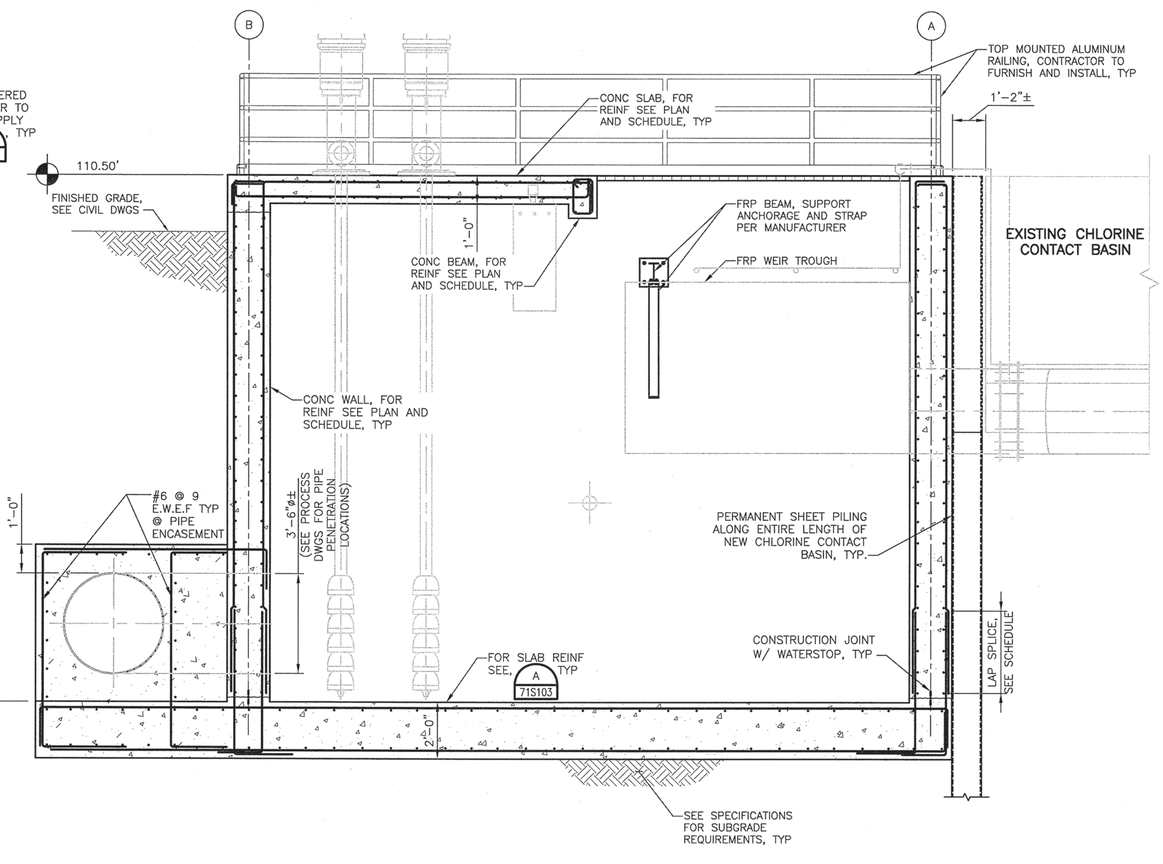


## SECTION B
SCALE: 3/8"=1'-0" — 71S101

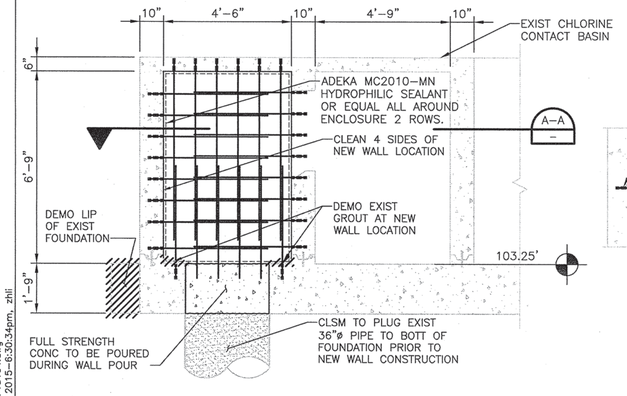


## SECTION A–A

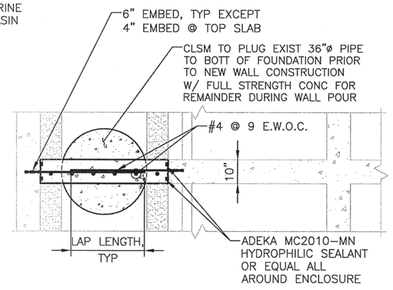


## SECTION C
SCALE: 3/8"=1'-0" — 71S101

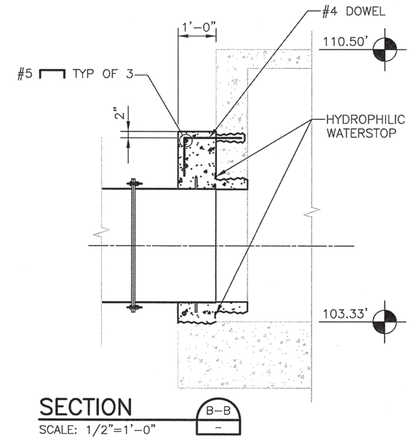


## SECTION B–B
SCALE: 1/2"=1'-0" — 71S101

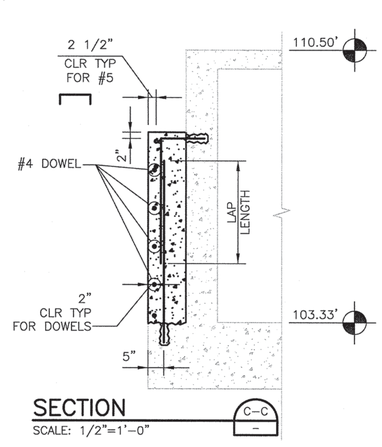


## SECTION C–C
SCALE: 1/2"=1'-0" — 71S101

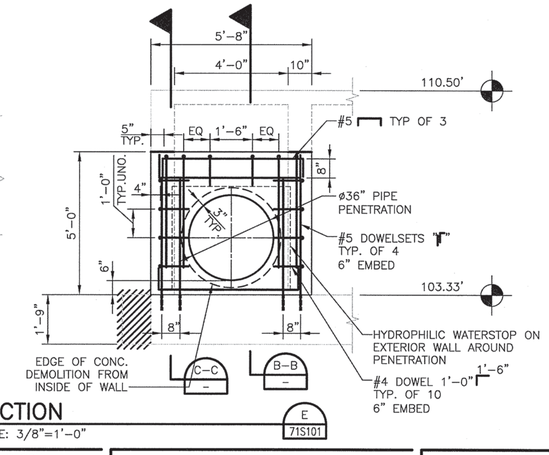


## SECTION D
SCALE: 3/8"=1'-0" — 71S101

## SECTION E
SCALE: 3/8"=1'-0" — 71S101

FILE: 215786-71S104.dwg
DATE: Jun 29, 2015-6:30:34pm, zhli

HDR Engineering, Inc.

| ISSUE | DATE | DESCRIPTION |
|---|---|---|
| A | JUNE 2015 | ISSUED FOR BID |

| | |
|---|---|
| PROJECT MANAGER | C. OLSON |
| DESIGNED | Z. LI |
| DESIGNED | |
| CHECKED | O. TAVANGAR |
| DRAWN | D. ELDREDGE |
| DATE | JUNE 30, 2015 |
| PROJECT NUMBER | 215786 |

REGISTERED PROFESSIONAL ENGINEER — ZHEN LI — NO. 74809 EXP. 12/31/15 — CIVIL — STATE OF CALIFORNIA

CITY OF PINOLE CALIFORNIA 1903

PINOLE/HERCULES WATER POLLUTION CONTROL PLANT UPGRADE
CLIENT PN

**STRUCTURAL**
**CHLORINE CONTACT BASIN - SECTIONS 2**

0 1" 2"

| | |
|---|---|
| FILENAME | 215786-71S104 |
| SCALE | AS NOTED |

SHEET **71S104**

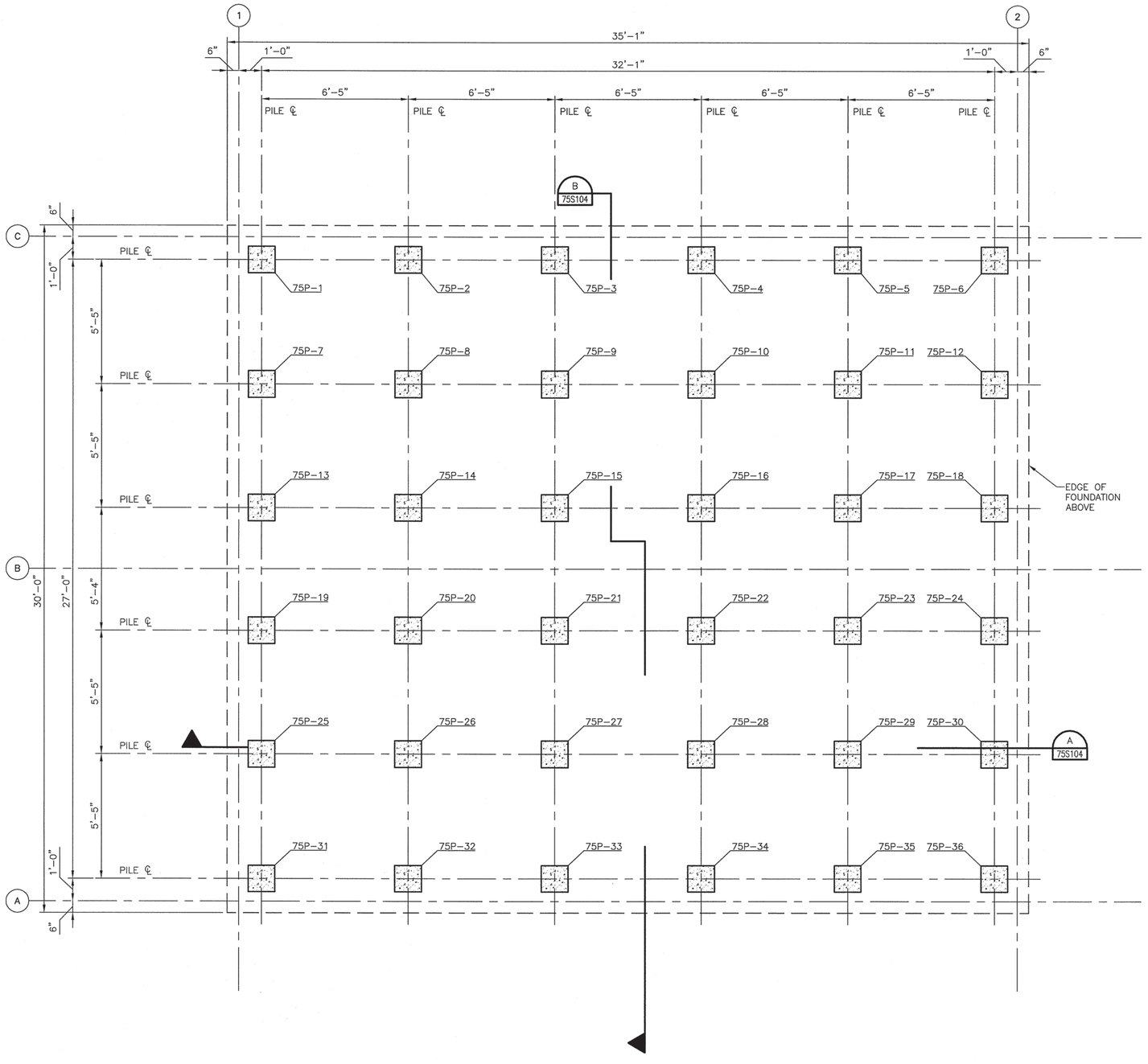


## PILE LAYOUT PLAN

SCALE: 3/8" = 1'-0"

1

**NOTES:**

1. FOR GENERAL NOTES, SEE SHEET 00S01 AND 00S02.
2. FOR SPECIAL INSPECTION REQUIREMENTS, SEE 00S03 AND 00S04.
3. FOR TYPICAL CONCRETE DETAILS, SEE SHEETS 00S05 THRU 00S08.
4. FOR TYPICAL PILE DETAILS AND SCHEDULE, SEE SHEET 00S10.
5. FOR TYPICAL GRATING DETAILS, SEE SHEET 00S18.
6. FOR TYPICAL RAILING DETAILS, SEE SHEET 00S19 AND 00S20.
7. ALL WALLS, PILES, AND PILECAPS ARE CENTERED ON GRID LINES, UNLESS NOTED OTHERWISE.
8. "75P-X" DENOTES 14" SQUARE PRE-STRESSED PRECAST CONCRETE PILES. SEE SHEET 00S10 FOR DETAILS AND SCHEDULE.

TRUE NORTH

PROJECT NORTH

FILE: 215786-75S101.dwg
DATE: Jun 30, 2015-8:44:23am, jwebb

HDR Engineering, Inc.

| ISSUE | DATE | DESCRIPTION |
|---|---|---|
| A | JUNE 2015 | ISSUED FOR BID |

| | |
|---|---|
| PROJECT MANAGER | C. OLSON |
| | |
| DESIGNED | M. MOSTAFA |
| DESIGNED | |
| CHECKED | O. TAVANGAR |
| DRAWN | D. ELDREDGE |
| DATE | JUNE 30, 2015 |
| | |
| PROJECT NUMBER | 215786 |

REGISTERED PROFESSIONAL ENGINEER
MOHAMMADREZA MOSTAFA
NO. 78649
EXP. 09/30/15
CIVIL
STATE OF CALIFORNIA
06/30/15

CITY OF PINOLE CALIFORNIA 1903

PINOLE/HERCULES
WATER POLLUTION
CONTROL PLANT UPGRADE
CLIENT PN

**STRUCTURAL**

**HYPOCHLORIDE / BISULFITE CHEMICAL STORAGE AND FEED, PILE LAYOUT PLAN**

0 1" 2"

| | |
|---|---|
| FILENAME | 215786-75S101 |
| SCALE | AS NOTED |

SHEET **75S101**

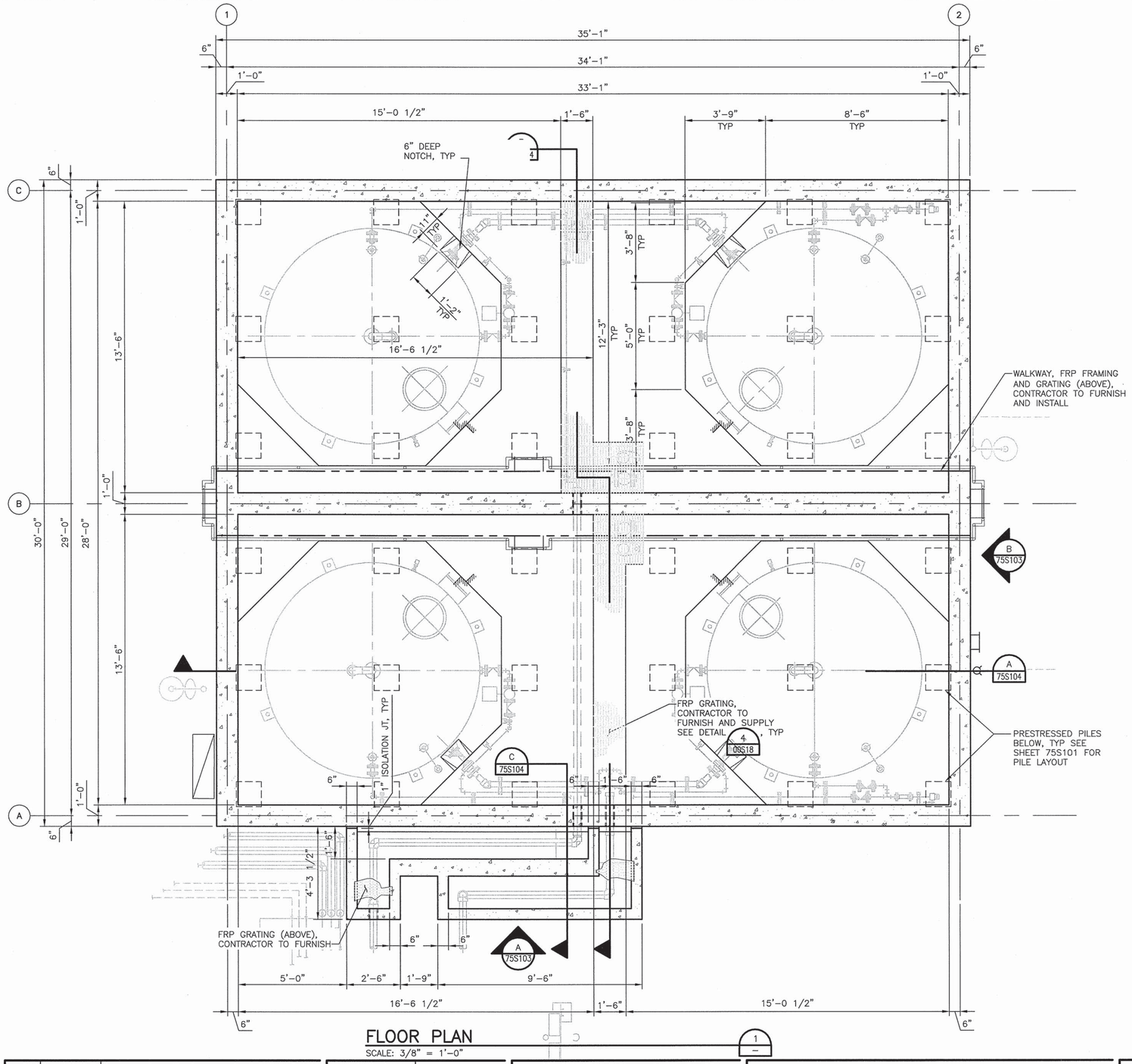


FLOOR PLAN

SCALE: 3/8" = 1'-0"

**NOTES:**

1. FOR GENERAL NOTES, SEE SHEET 00S01 AND 00S02.
2. FOR SPECIAL INSPECTION REQUIREMENTS, SEE 00S03 AND 00S04.
3. FOR TYPICAL CONCRETE DETAILS, SEE SHEETS 00S05 THRU 00S08.
4. FOR TYPICAL REINFORCING DETAILS, SEE 00S09.
5. FOR TYPICAL CONCRETE SLAB, AND WALL DETAILS, SEE SHEETS 00S11 AND 00S12.
6. FOR TYPICAL PILE DETAILS AND SCHEDULE, SEE SHEET 00S10.
7. FOR TYPICAL GRATING DETAILS, SEE SHEET 00S18.
8. FOR TYPICAL RAILING DETAILS, SEE SHEET 00S19 AND 00S20.
9. DENOTES CHANGE IN TOP OF CONCRETE ELEVATION.
10. ALL COLUMNS, WALLS, PILES, AND PILECAPS ARE CENTERED ON GRID LINES, UNLESS NOTED OTHERWISE.
11. CONTRACTOR TO VERIFY ALL DIMENSIONS AND LOCATIONS WITH THE PROCESS DRAWINGS.

TRUE NORTH

PROJECT NORTH

FILE: 215786-75S102.dwg
DATE: Jun 30, 2015 - 8:44:27am, jwebb

HDR Engineering, Inc.

| ISSUE | DATE | DESCRIPTION |
|---|---|---|
| A | JUNE 2015 | ISSUED FOR BID |

| | |
|---|---|
| PROJECT MANAGER | C. OLSON |
| DESIGNED | M. MOSTAFA |
| DESIGNED | |
| CHECKED | O. TAVANGAR |
| DRAWN | D. ELDREDGE |
| DATE | JUNE 30, 2015 |
| PROJECT NUMBER | 215786 |

REGISTERED PROFESSIONAL ENGINEER MOHAMMADREZA MOSTAFA NO. 78649 EXP. 09/30/15 CIVIL STATE OF CALIFORNIA 06/30/15

CITY OF PINOLE CALIFORNIA 1903

PINOLE/HERCULES
WATER POLLUTION
CONTROL PLANT UPGRADE
CLIENT PN

**STRUCTURAL**

**HYPOCHLORIDE / BISULFITE CHEMICAL STORAGE AND FEED, FLOOR PLAN**

0 1" 2"

| | |
|---|---|
| FILENAME | 215786-75S102 |
| SCALE | AS NOTED |

SHEET 75S102

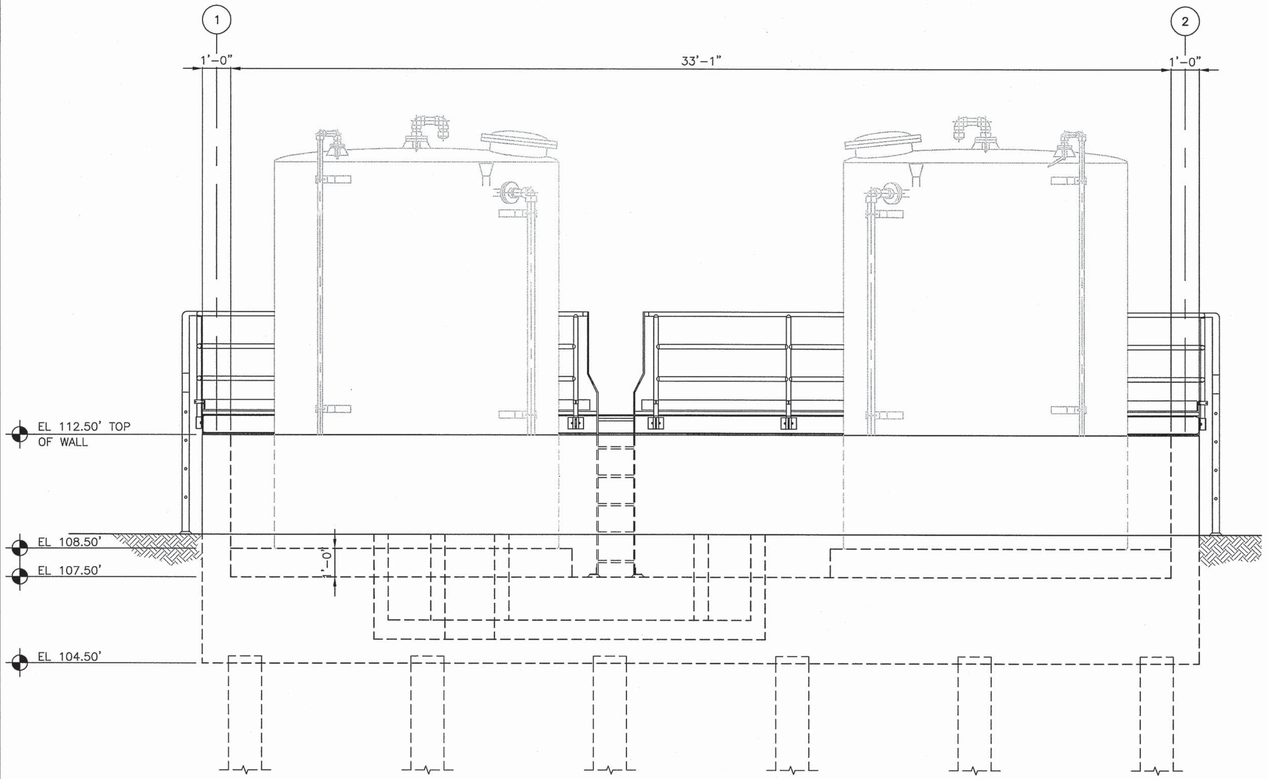


ELEVATION
SCALE: 3/8" = 1'-0"

A
75S102

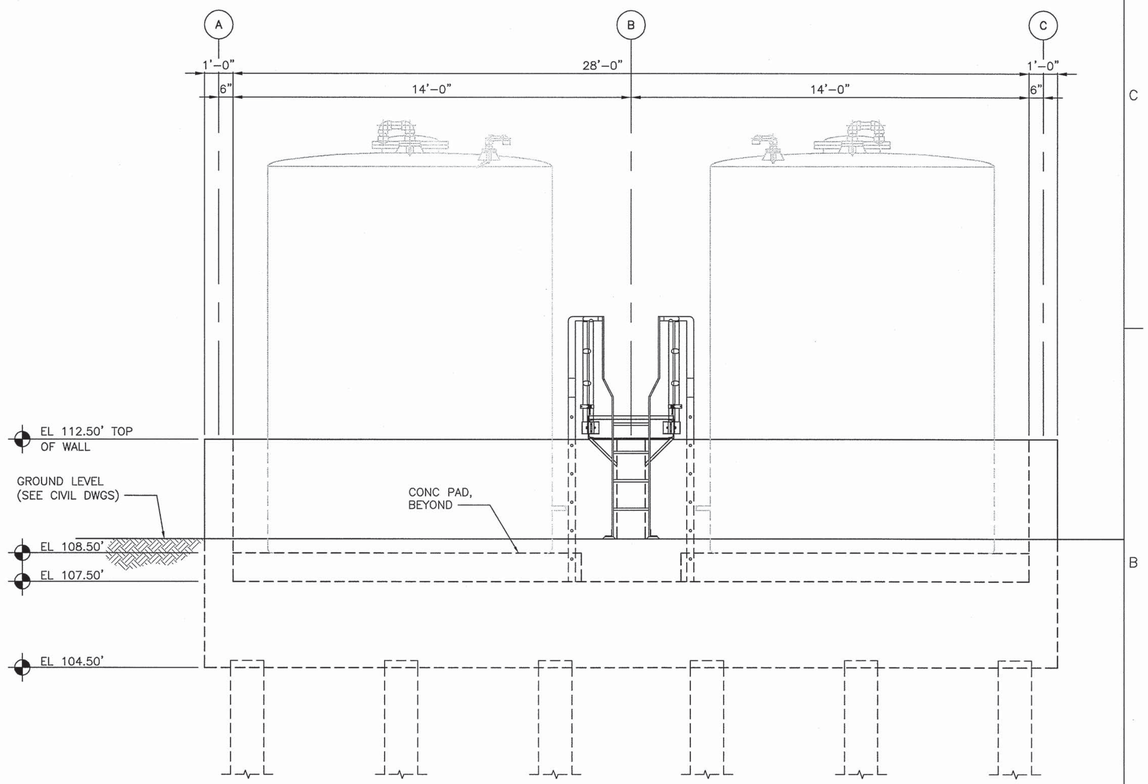


ELEVATION
SCALE: 3/8" = 1'-0"

B
75S102

**NOTES:**

1. FOR GENERAL NOTES, SEE SHEET 00S01 AND 00S02.
2. FOR SPECIAL INSPECTION REQUIREMENTS, SEE 00S03 AND 00S04.
3. FOR TYPICAL CONCRETE DETAILS, SEE SHEETS 00S05 THRU 00S08.
4. FOR TYPICAL PILE DETAILS AND SCHEDULE, SEE SHEET 00S10.
5. FOR TYPICAL GRATING DETAILS, SEE SHEET 00S18.
6. FOR TYPICAL RAILING DETAILS, SEE SHEET 00S19 AND 00S20.
7. ALL WALLS, PILES, AND PILECAPS ARE CENTERED ON GRID LINES, UNLESS NOTED OTHERWISE.

FILE: 215786-75S103.dwg
DATE: Jun 30, 2015-8:44:31am, jwebb

HDR
HDR Engineering, Inc.

| ISSUE | DATE | DESCRIPTION |
|---|---|---|
| A | JUNE 2015 | ISSUED FOR BID |

| | |
|---|---|
| PROJECT MANAGER | C. OLSON |
| | |
| DESIGNED | M. MOSTAFA |
| DESIGNED | |
| CHECKED | O. TAVANGAR |
| DRAWN | D. ELDREDGE |
| DATE | JUNE 30, 2015 |
| | |
| PROJECT NUMBER | 215786 |

REGISTERED PROFESSIONAL ENGINEER
MOHAMMADREZA MOSTAFA
NO. 78649
EXP. 09/30/15
CIVIL
STATE OF CALIFORNIA
06/30/15

CITY OF PINOLE CALIFORNIA
1903

PINOLE/HERCULES
WATER POLLUTION
CONTROL PLANT UPGRADE
CLIENT PN

**STRUCTURAL**

**HYPOCHLORIDE / BISULFITE CHEMICAL STORAGE AND FEED, ELEVATOINS**

0 1" 2"

| | |
|---|---|
| FILENAME | 215786-75S103 |
| SCALE | AS NOTED |

SHEET
**75S103**

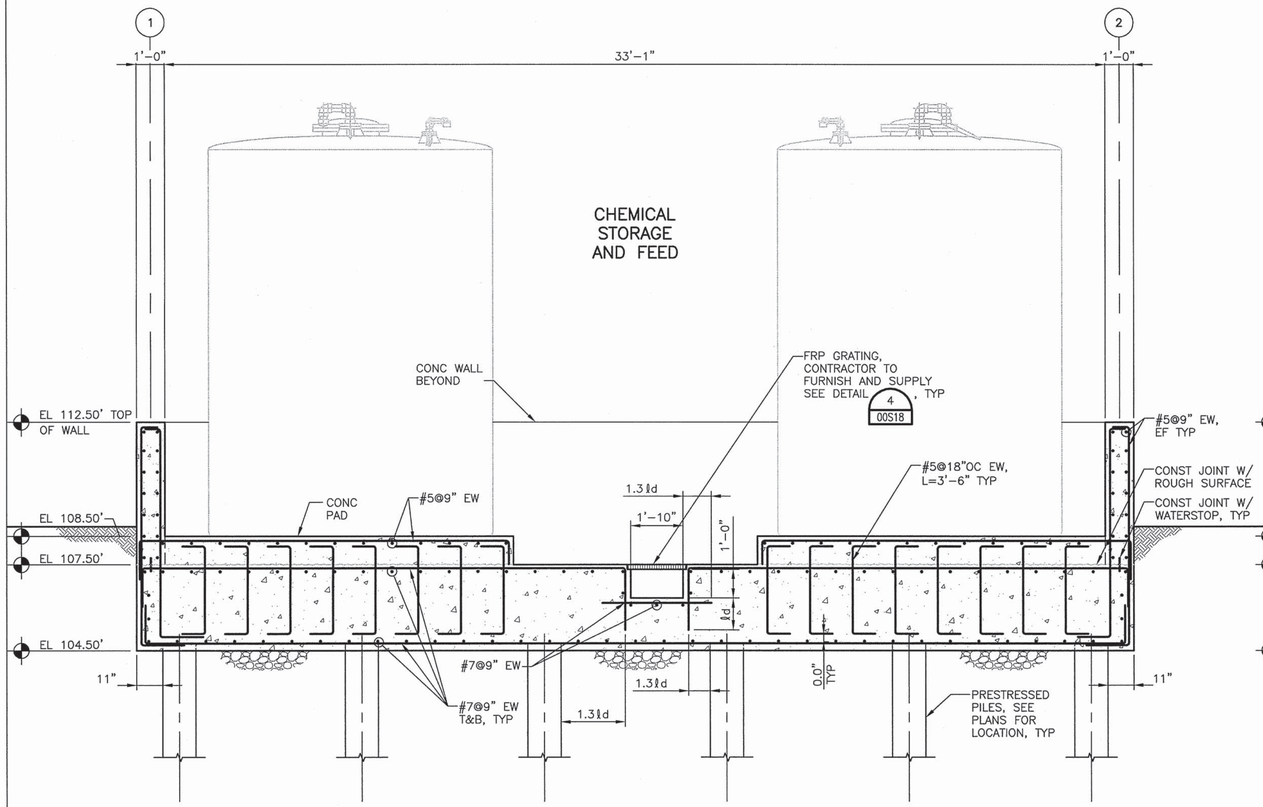


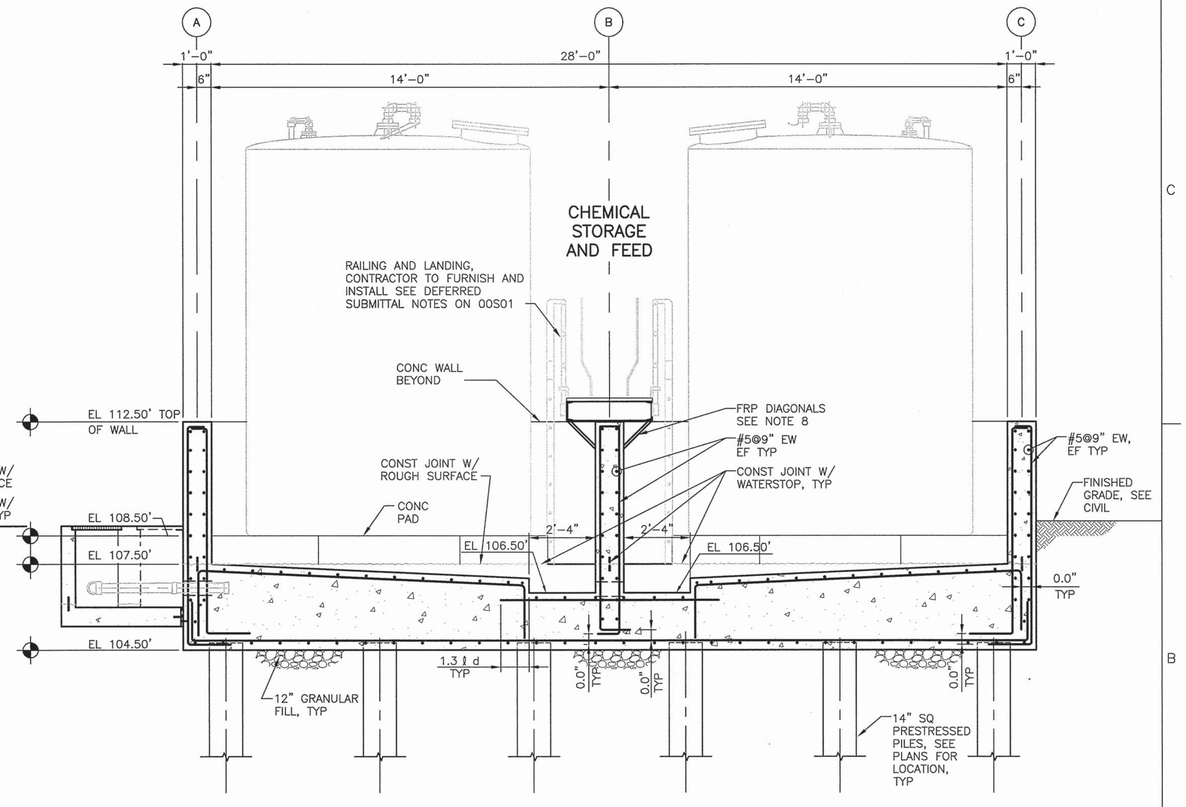


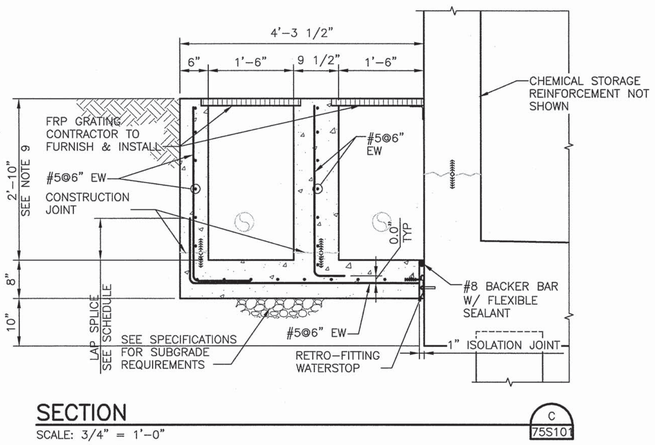


NOTES:

1. FOR GENERAL NOTES, SEE SHEET 00S01 AND 00S02.
2. FOR SPECIAL INSPECTION REQUIREMENTS, SEE 00S03 AND 00S04.
3. FOR TYPICAL CONCRETE DETAILS, SEE SHEETS 00S05 THRU 00S08.
4. FOR TYPICAL PILE DETAILS AND SCHEDULE, SEE SHEET 00S10.
5. FOR TYPICAL GRATING DETAILS, SEE SHEET 00S18.
6. FOR TYPICAL RAILING DETAILS, SEE SHEET 00S19 AND 00S20.
7. ALL WALLS, PILES, AND PILECAPS ARE CENTERED ON GRID LINES, UNLESS NOTED OTHERWISE.
8. THE FRAMING FOR THE FRP GRATING CAN ONLY BE SUPPORTED BY THE WALL.
9. CONTRACTOR TO VERIFY ALL ELEVATIONS, DIMENSIONS AND LOCATIONS WITH THE PROCESS DRAWINGS.

FILE: 215786-75S104.dwg
DATE: Jun 30, 2015-8:44:35am, jwebb

HDR Engineering, Inc.

| ISSUE | DATE | DESCRIPTION |
|---|---|---|
| A | JUNE 2015 | ISSUED FOR BID |

| | |
|---|---|
| PROJECT MANAGER | C. OLSON |
| | |
| DESIGNED | M. MOSTAFA |
| DESIGNED | |
| CHECKED | O. TAVANGAR |
| DRAWN | D. ELDREDGE |
| DATE | JUNE 30, 2015 |
| | |
| PROJECT NUMBER | 215786 |

REGISTERED PROFESSIONAL ENGINEER MOHAMMADREZA MOSTAFA NO. 78649 EXP. 09/30/15 CIVIL STATE OF CALIFORNIA
06/30/15

CITY OF PINOLE CALIFORNIA 1903

PINOLE/HERCULES WATER POLLUTION CONTROL PLANT UPGRADE
CLIENT PN

# STRUCTURAL HYPOCHLORIDE / BISULFITE CHEMICAL STORAGE AND FEED, SECTIONS

0 1" 2"

| | |
|---|---|
| FILENAME | 215786-75S104 |
| SCALE | AS NOTED |

SHEET 75S104

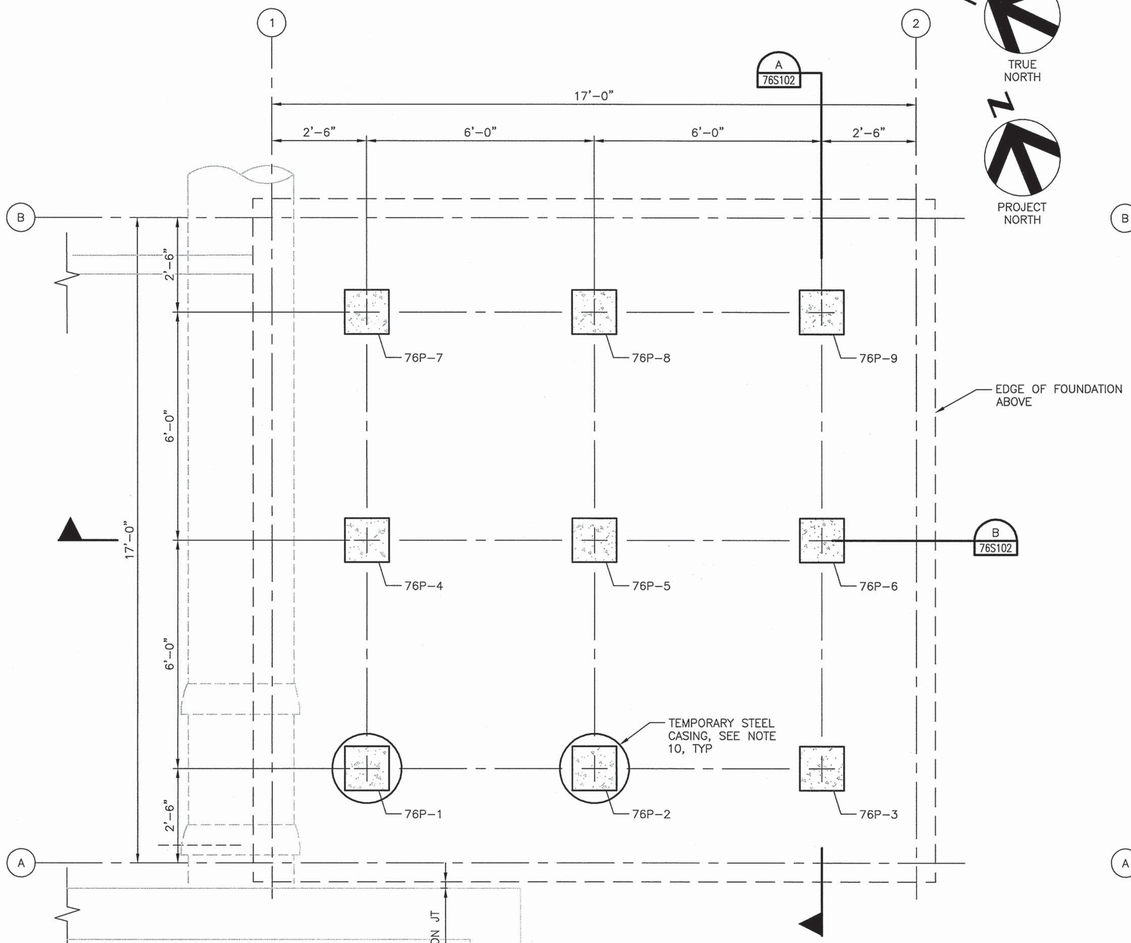


HEADWORKS STRUCTURE SEE 12 SERIES

NOTES:

1. FOR GENERAL NOTES SEE SHEET 00S01 AND 00S02.
2. FOR SPECIAL INSPECTION REQUIREMENTS, SEE 00S03 AND 00S04.
3. FOR TYPICAL CONCRETE DETAILS SEE 00S05 THROUGH 00S08.
4. FOR TYPICAL PIPE DETAILS SEE 00S10.
5. "76P-X" DENOTES 14" SQUARE PRESTRESSED, PRECAST CONCRETE PILES, SEE SHEET 00S10 FOR DETAILS AND SCHEDULE.
6. ALL WALLS, PILES AND PILECAPS ARE CENTERED ON GRID LINES UNLESS NOTED OTHERWISE.
7. DENOTES CHANGE IN TOP OF CONCRETE ELEVATION.
8. FOR TYPICAL REINFORCING DETAILS SEE 00S09.
9. FOR TYPICAL GRATING DETAILS SEE 00S18.
10. FOR PROTECTION OF ADJACENT FOUNDATION PILE, 76P-1, 76P-4 AND 76P-7 SHALL BE DRIVEN THROUGH STEEL CASINGS EXTENDING FROM TOP OF SUBGRADE DOWN TO BOTTOM OF CHLORINE CONTACT STRUCTURE FOUNDATION. AFTER PILE INSTALLATION CASING SHALL BE REMOVED AND VOID FILLED WITH LOW DENSITY CONCRETE FILL.
11. VERIFY THE EXACT LOCATION AND DIMENSIONS OF CONCRETE PAD W/ PROCESS DRAWINGS.

## FERRIC CHLORIDE STORAGE AND FEED, PILE LAYOUT PLAN

1/2" = 1'-0"

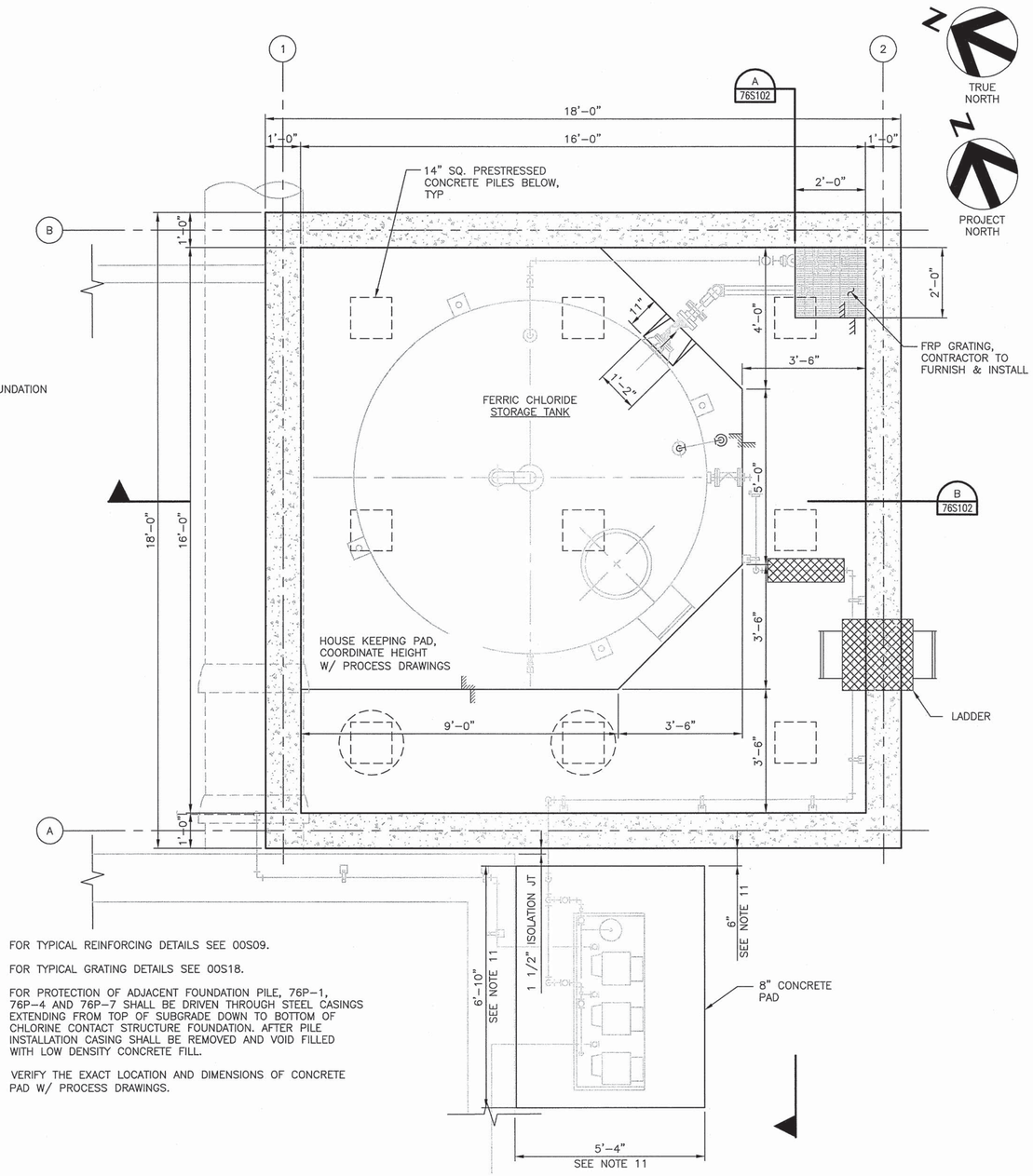


## FERRIC CHLORIDE STORAGE AND FEED, PLAN

1/2" = 1'-0"

| ISSUE | DATE | DESCRIPTION |
|---|---|---|
| A | JUNE 2015 | ISSUED FOR BID |

| | |
|---|---|
| PROJECT MANAGER | C. OLSON |
| | |
| DESIGNED | M. MOSTAFA |
| DESIGNED | |
| CHECKED | O. TAVANGAR |
| DRAWN | D. ELDREDGE |
| DATE | JUNE 30, 2015 |
| | |
| PROJECT NUMBER | 215786 |

REGISTERED PROFESSIONAL ENGINEER MOHAMMADREZA MOSTAFA NO. 78649 EXP. 09/30/15 CIVIL STATE OF CALIFORNIA 06/30/15

HDR Engineering, Inc.

CITY OF PINOLE CALIFORNIA 1903

PINOLE/HERCULES WATER POLLUTION CONTROL PLANT UPGRADE CLIENT PN

**STRUCTURAL**

**FERRIC CHLORIDE CHEMICAL STORAGE AND FEED, PLANS**

0 1" 2"

| | |
|---|---|
| FILENAME | 215786-76S101 |
| SCALE | AS NOTED |

SHEET **76S101**

FILE: 215786-76S101.dwg
DATE: Jun 30, 2015-8:44:40am, jwebb

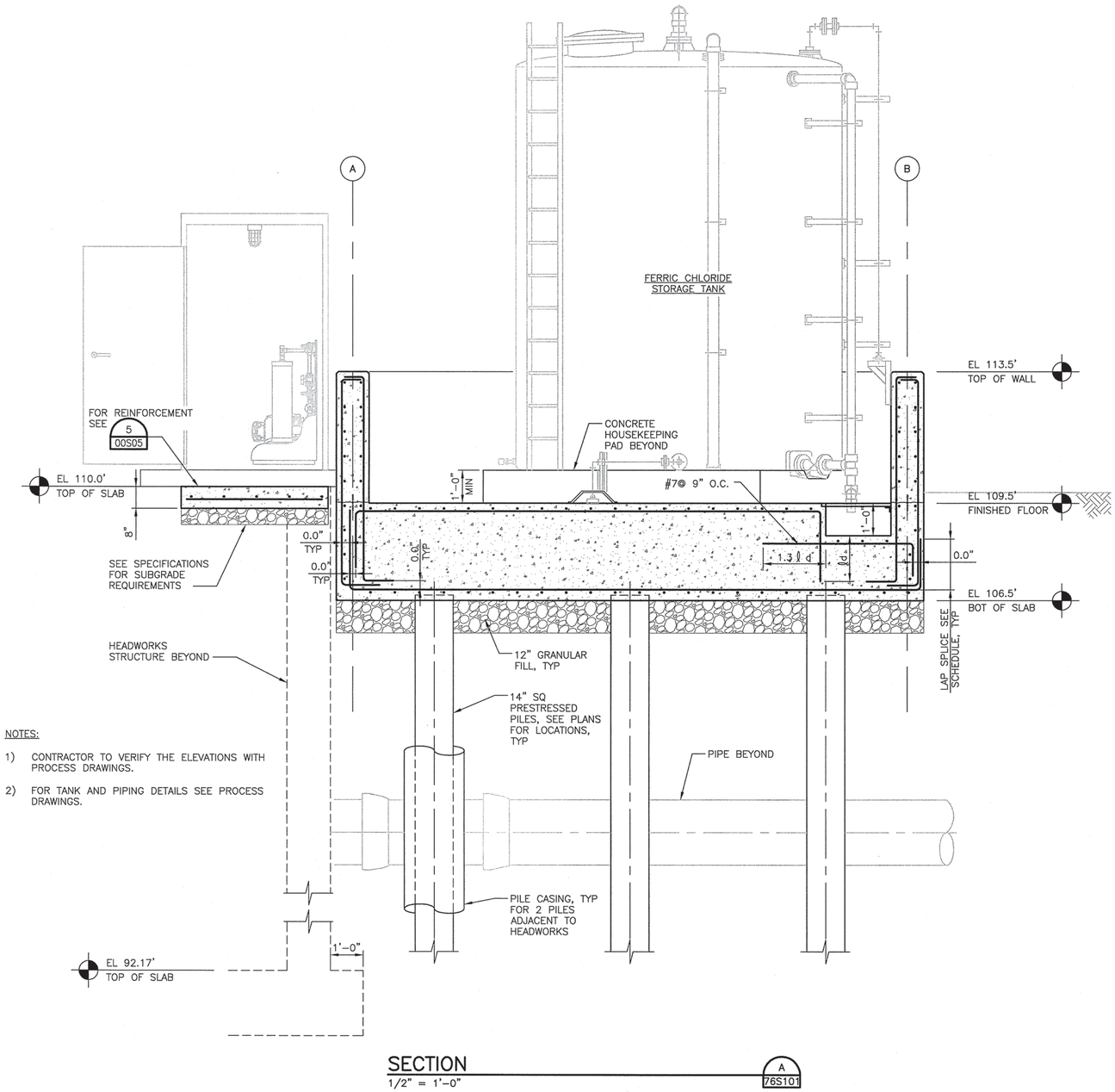


NOTES:

1) CONTRACTOR TO VERIFY THE ELEVATIONS WITH PROCESS DRAWINGS.
2) FOR TANK AND PIPING DETAILS SEE PROCESS DRAWINGS.

SECTION
1/2" = 1'-0"
A 76S101

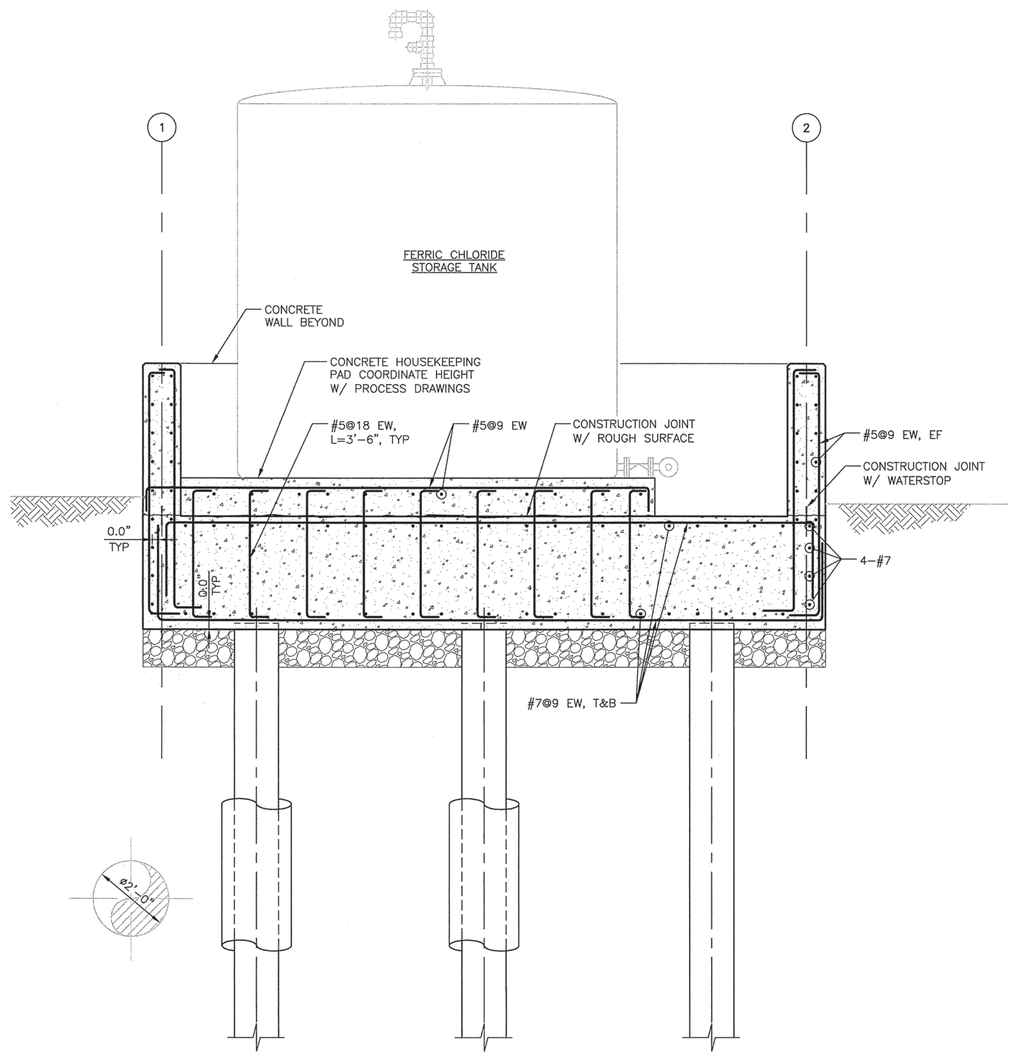


SECTION
1/2" = 1'-0"
B 76S101

FILE: 215786-76S102.dwg
DATE: Jun. 30, 2015 - 9:18:02am, jwebb

HDR
HDR Engineering, Inc.

| ISSUE | DATE | DESCRIPTION |
|---|---|---|
| A | JUNE 2015 | ISSUED FOR BID |

| | |
|---|---|
| PROJECT MANAGER | C. OLSON |
| | |
| DESIGNED | M. MOSTAFA |
| DESIGNED | |
| CHECKED | O. TAVANGAR |
| DRAWN | |
| DATE | JUNE 30, 2015 |
| | |
| PROJECT NUMBER | 215786 |

REGISTERED PROFESSIONAL ENGINEER MOHAMMADREZA MOSTAFA NO. 78649 EXP. 09/30/15 CIVIL STATE OF CALIFORNIA 06/30/15

CITY OF PINOLE CALIFORNIA 1903

PINOLE/HERCULES WATER POLLUTION CONTROL PLANT UPGRADE
CLIENT PN

**STRUCTURAL**

**FERRIC CHLORIDE CHEMICAL STORAGE AND FEED SECTIONS**

0 1" 2"

| | |
|---|---|
| FILENAME | 215786-76S102 |
| SCALE | AS NOTED |

SHEET **76S102**

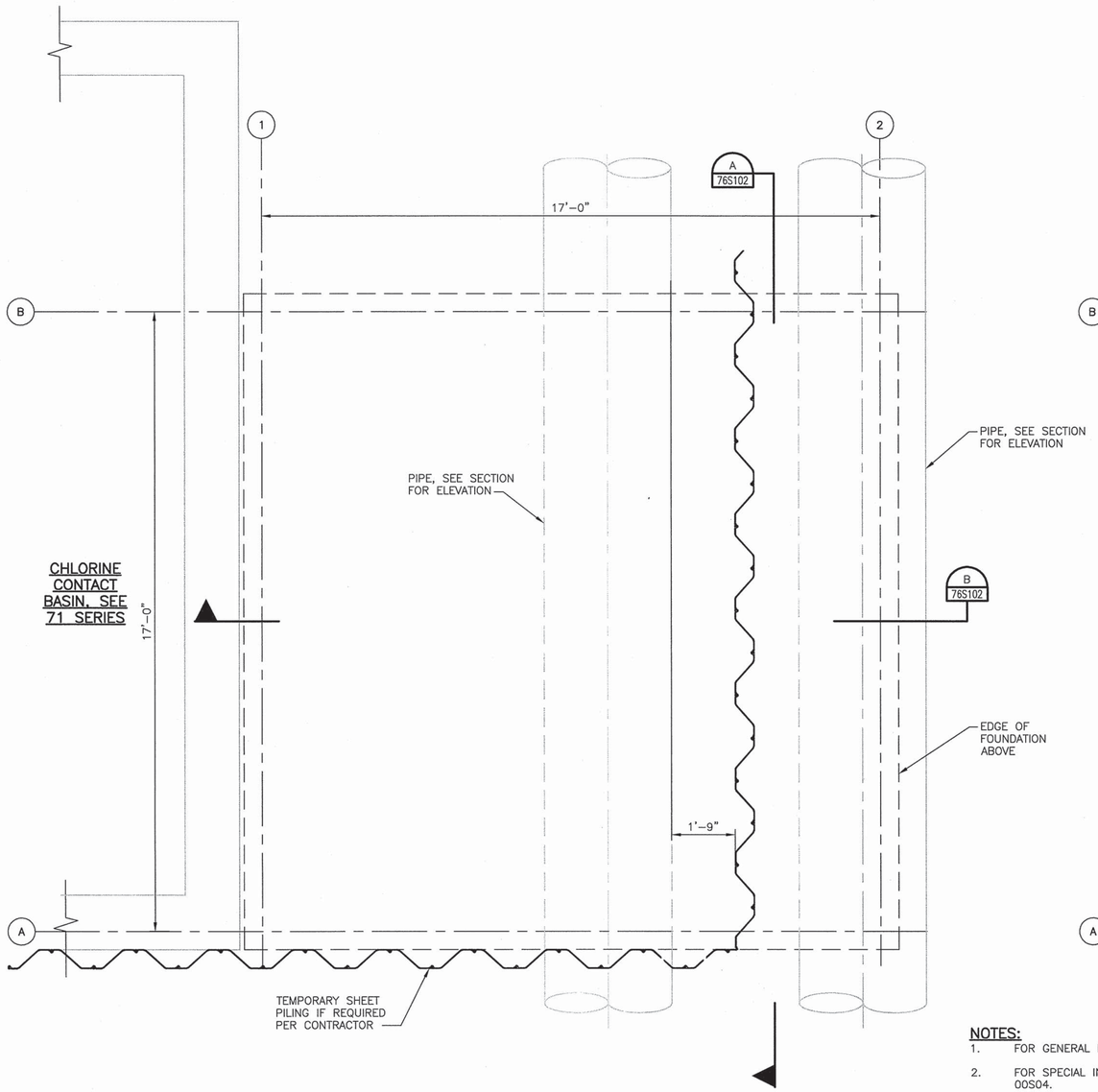


## LOWER PLAN

1/2" = 1'-0"

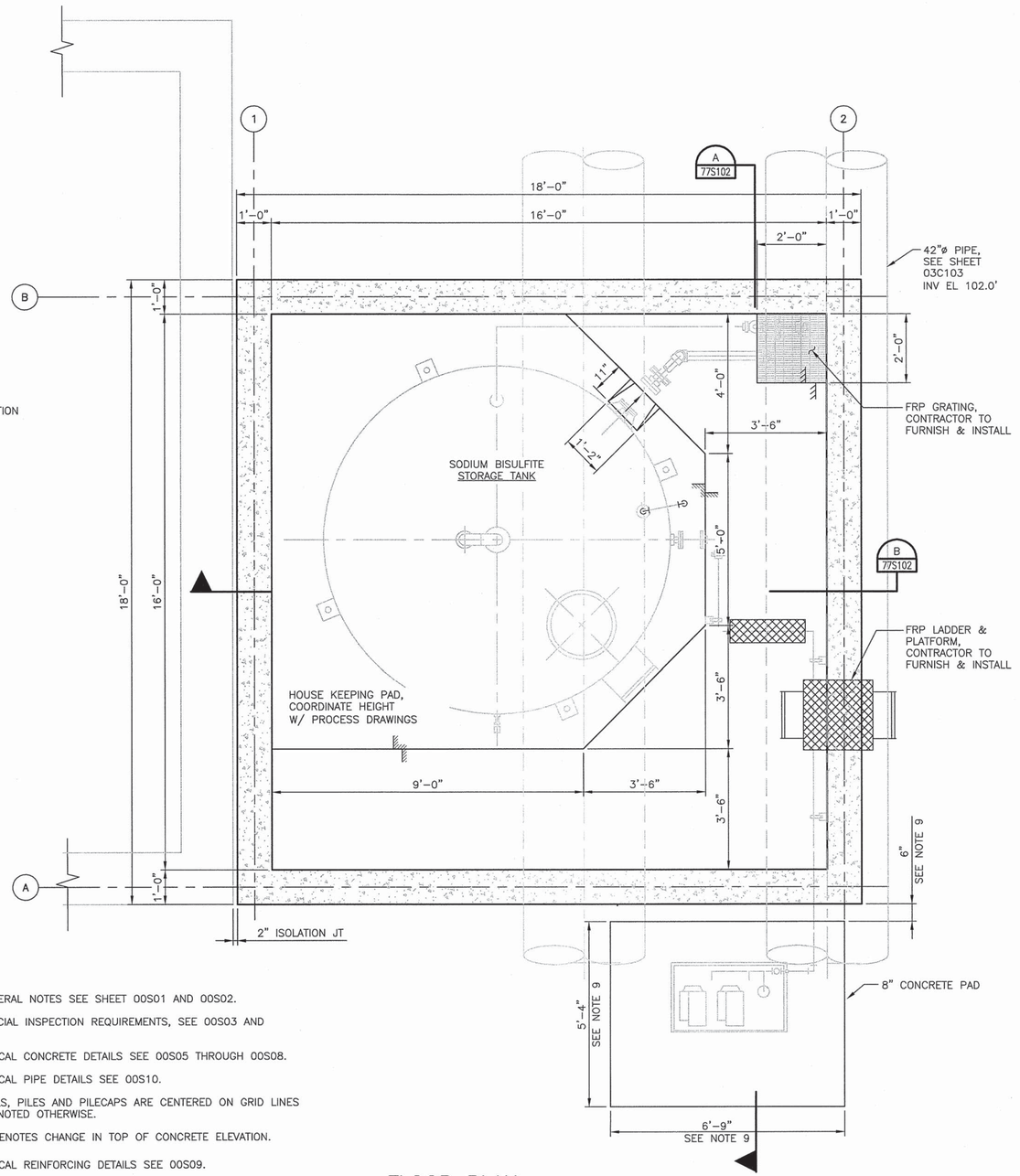


## FLOOR PLAN

1/2" = 1'-0"

TRUE NORTH

PROJECT NORTH

**NOTES:**

1. FOR GENERAL NOTES SEE SHEET 00S01 AND 00S02.
2. FOR SPECIAL INSPECTION REQUIREMENTS, SEE 00S03 AND 00S04.
3. FOR TYPICAL CONCRETE DETAILS SEE 00S05 THROUGH 00S08.
4. FOR TYPICAL PIPE DETAILS SEE 00S10.
5. ALL WALLS, PILES AND PILECAPS ARE CENTERED ON GRID LINES UNLESS NOTED OTHERWISE.
6. DENOTES CHANGE IN TOP OF CONCRETE ELEVATION.
7. FOR TYPICAL REINFORCING DETAILS SEE 00S09.
8. FOR TYPICAL GRATING DETAILS SEE 00S18.
9. VERIFY THE EXACT LOCATION AND DIMENSIONS OF CONCRETE PAD W/ PROCESS DRAWINGS.

FILE: 215786-77S101.dwg
DATE: Jun 30, 2015-8:44:52am, jwebb

HDR Engineering, Inc.

| ISSUE | DATE | DESCRIPTION |
|---|---|---|
| A | JUNE 2015 | ISSUED FOR BID |

| | |
|---|---|
| PROJECT MANAGER | C. OLSON |
| DESIGNED | M. MOSTAFA |
| DESIGNED | |
| CHECKED | O. TAVANGAR |
| DRAWN | |
| DATE | JUNE 30, 2015 |
| PROJECT NUMBER | 215786 |

REGISTERED PROFESSIONAL ENGINEER MOHAMMADREZA MOSTAFA NO. 78649 EXP. 09/30/15 CIVIL STATE OF CALIFORNIA 06/30/15

CITY OF PINOLE CALIFORNIA 1903

PINOLE/HERCULES
WATER POLLUTION
CONTROL PLANT UPGRADE
CLIENT PN

**STRUCTURAL**

**SODIUM HYDROXIDE CHEMICAL STORAGE AND FEED PLANS**

0 1" 2"

| | |
|---|---|
| FILENAME | 215786-77S101 |
| SCALE | AS NOTED |

SHEET **77S101**

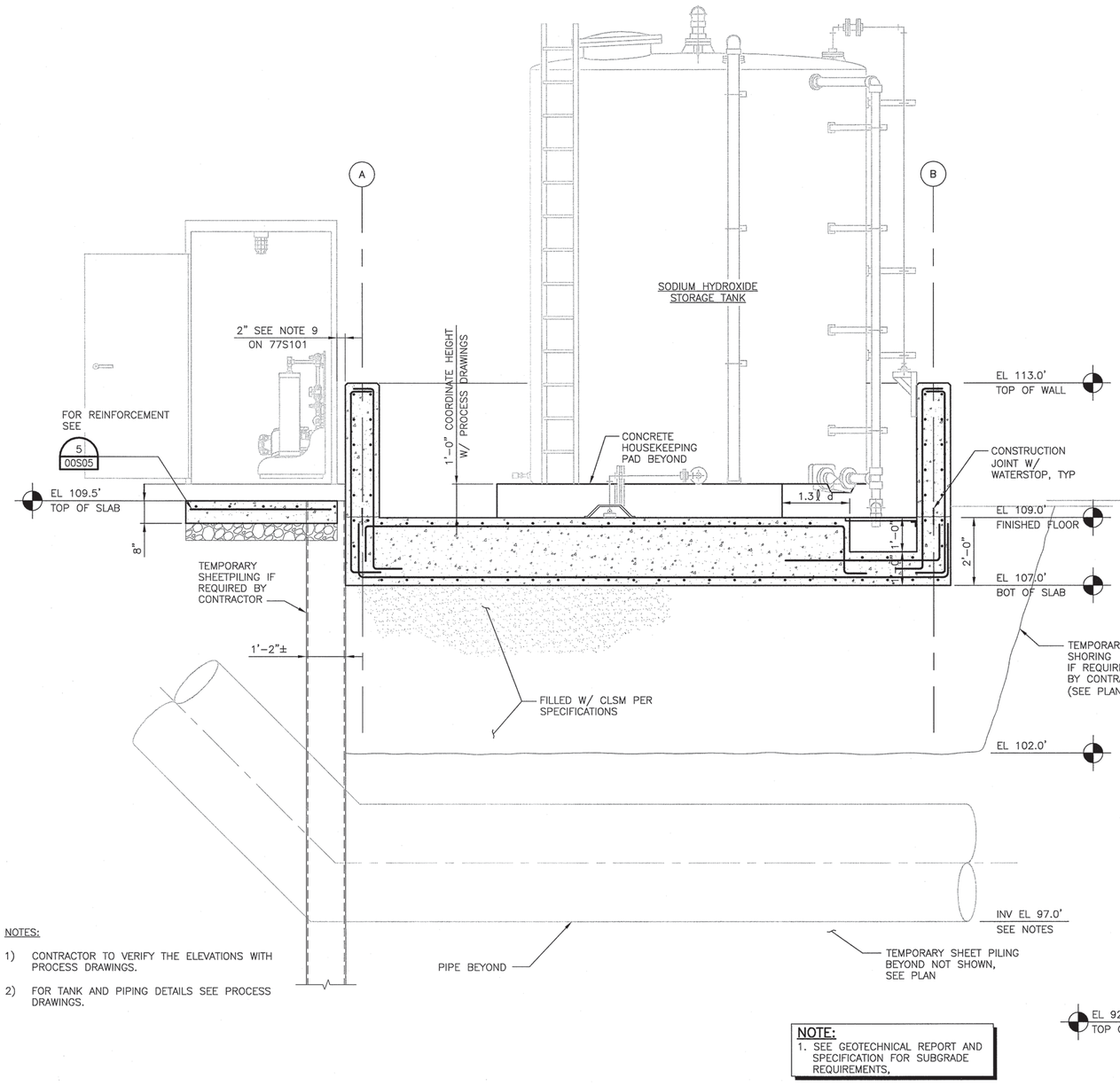


NOTES:

1) CONTRACTOR TO VERIFY THE ELEVATIONS WITH PROCESS DRAWINGS.
2) FOR TANK AND PIPING DETAILS SEE PROCESS DRAWINGS.

**NOTE:**
1. SEE GEOTECHNICAL REPORT AND SPECIFICATION FOR SUBGRADE REQUIREMENTS,

SECTION
1/2" = 1'-0"
A / 77S101

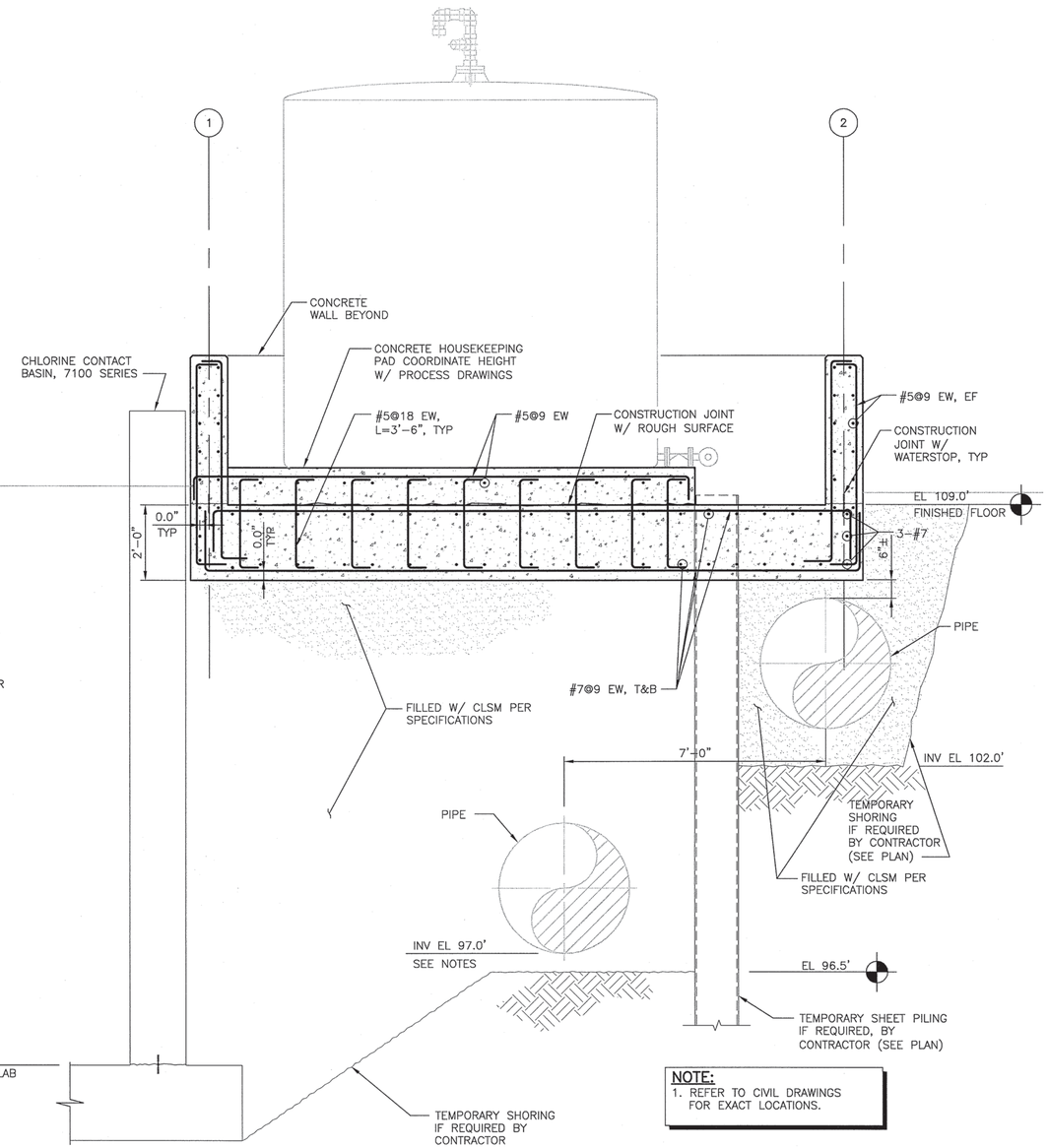


**NOTE:**
1. REFER TO CIVIL DRAWINGS FOR EXACT LOCATIONS.

SECTION
1/2" = 1'-0"
B / 77S101

FILE: 215786-77S102.dwg
DATE: Jun 30, 2015-11:32:49am, rsnider

HDR Engineering, Inc.

| ISSUE | DATE | DESCRIPTION |
|---|---|---|
| A | JUNE 2015 | ISSUED FOR BID |

| | |
|---|---|
| PROJECT MANAGER | C. OLSON |
| DESIGNED | M. MOSTAFA |
| DESIGNED | |
| CHECKED | O. TAVANGAR |
| DRAWN | |
| DATE | JUNE 30, 2015 |
| PROJECT NUMBER | 215786 |

REGISTERED PROFESSIONAL ENGINEER MOHAMMADREZA MOSTAFA NO. 78649 EXP. 09/30/15 CIVIL STATE OF CALIFORNIA 06/30/15

CITY OF PINOLE CALIFORNIA 1903

PINOLE/HERCULES
WATER POLLUTION
CONTROL PLANT UPGRADE
CLIENT PN

**STRUCTURAL**

**SODIUM HYDROXIDE CHEMICAL STORAGE AND FEED SECTIONS**

0 1" 2"

| FILENAME | 215786-77S102 |
|---|---|
| SCALE | AS NOTED |

SHEET **77S102**

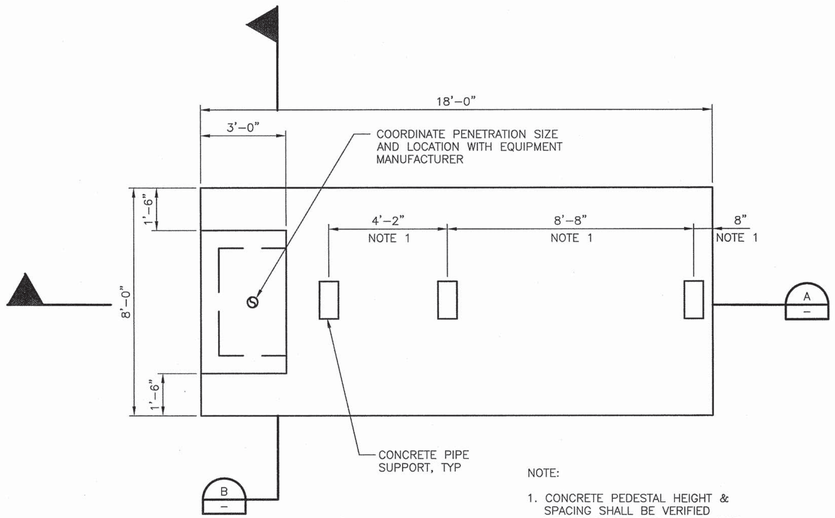


NOTE:

1. CONCRETE PEDESTAL HEIGHT & SPACING SHALL BE VERIFIED WITH PROCESS ENGINEER & PIPE MANUFACTURER BEFORE CONSTRUCTION.

## GAS BURNER PLAN
3/8" = 1'-0"

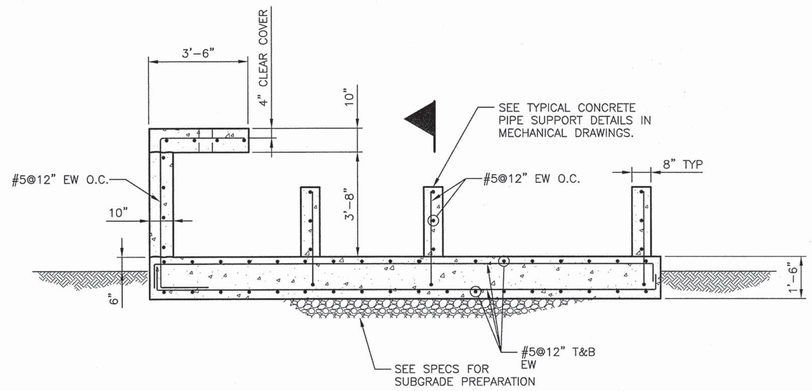


## SECTION
3/8" = 1'-0"

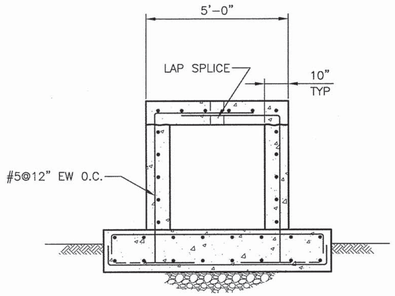


## SECTION
3/8" = 1'-0"

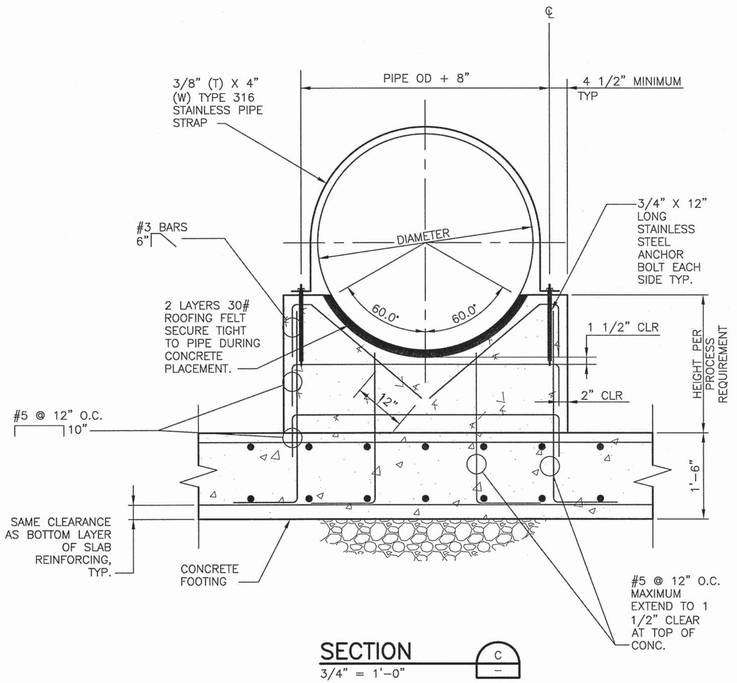


## SECTION
3/4" = 1'-0"

FILE: 85S101.dwg
DATE: Jun 29, 2015-6:22:41pm, zhli

HDR Engineering, Inc.

| ISSUE | DATE | DESCRIPTION |
|---|---|---|
| A | JUNE 2015 | ISSUED FOR BID |

| | |
|---|---|
| PROJECT MANAGER | C. OLSON |
| DESIGNED | Z. LI |
| DESIGNED | |
| CHECKED | O. TAVANGAR |
| DRAWN | D. ELDREDGE |
| DATE | JUNE 30, 2015 |
| PROJECT NUMBER | 215786 |

REGISTERED PROFESSIONAL ENGINEER
ZHEN LI
NO. 74809
EXP. 12/31/15
6/30/2015
CIVIL
STATE OF CALIFORNIA

CITY OF PINOLE CALIFORNIA
1903

PINOLE/HERCULES
WATER POLLUTION
CONTROL PLANT UPGRADE
CLIENT PN

**STRUCTURAL**

**DIGESTER GAS BURNER PLAN AND SECTIONS**

0 1" 2"

| | |
|---|---|
| FILENAME | 85S101 |
| SCALE | AS NOTED |

SHEET
**85S101**

NOTES:

1. FOR GENERAL NOTES SEE SHEET 00S01 AND 00S02.
2. FOR SPECIAL INSPECTION REQUIREMENTS, SEE 00S03 AND 00S04.
3. FOR TYPICAL CONCRETE DETAILS SEE 00S05 THROUGH 00S08.
4. FOR TYPICAL REINFORCING DETAILS SEE 00S09.
5. FOR EXACT LOCATION OF THE TANK PAD, SEE PROCESS DRAWINGS.
6. THE PENETRATION IN THE EXISTING SLAB SHOULD NOT HIT THE EXISITING REBARS.
7. MANUFACTURER TO DESIGN THE PUMP PADS AND ANCHOR BOLTS FOR PUMPS BASED ON THE THICKNESS OF THE PADS AND THE OPERATIONAL LOADS FROM THE PUMP.
8. 91P–X DENOTES 14" SQUARE PRE–STRESSED PRECAST CONCRETE PILES. SEE SHEET 00S10 FOR DETAILS AND SCHEDULE.

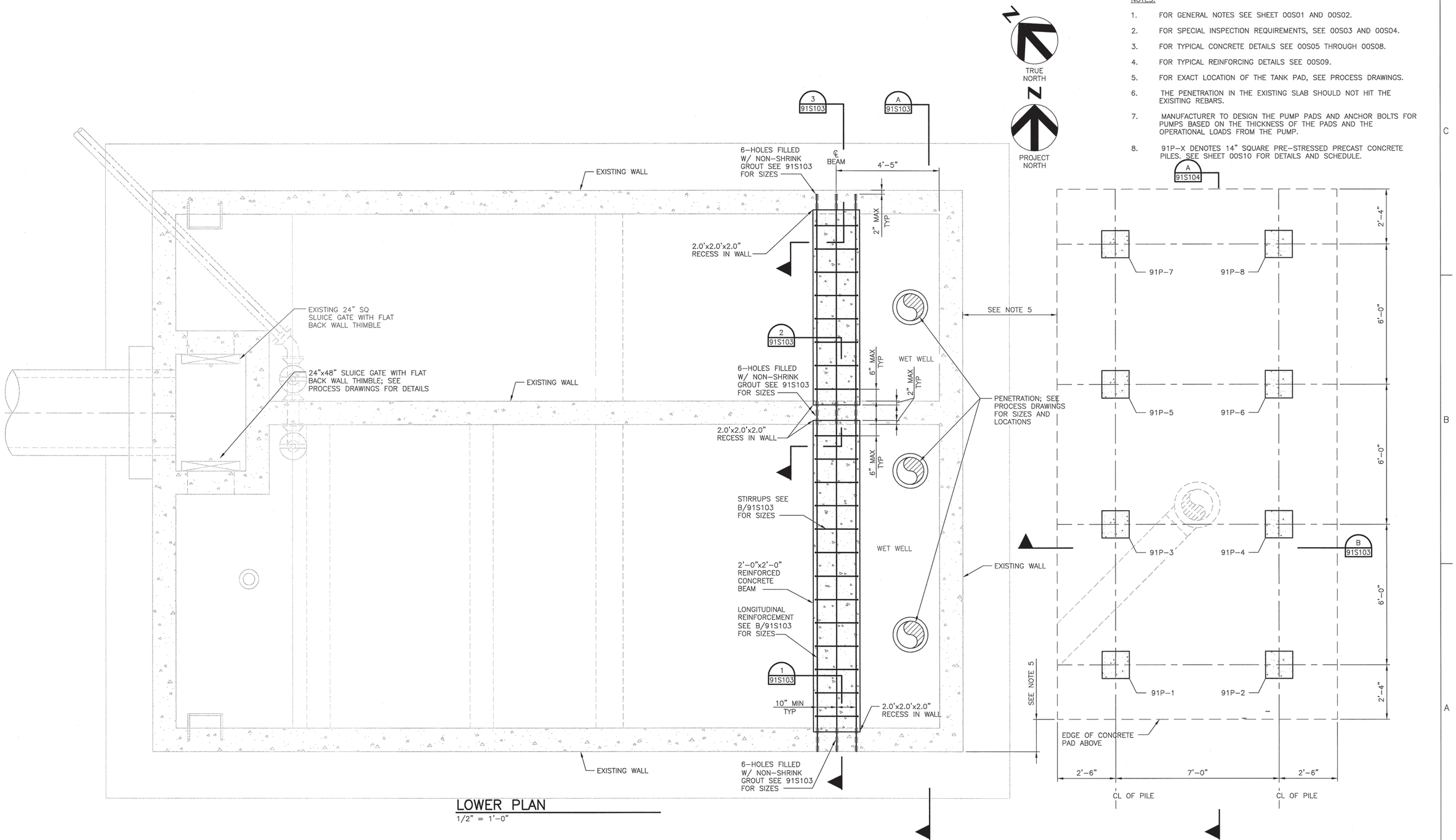


## LOWER PLAN
1/2" = 1'–0"

| ISSUE | DATE | DESCRIPTION |
|---|---|---|
| A | JUNE 2015 | ISSUED FOR BID |

| | |
|---|---|
| PROJECT MANAGER | C. OLSON |
| DESIGNED | M. MOSTAFA |
| DESIGNED | |
| CHECKED | O TAVANGAR |
| DRAWN | D. ELDRIDGE |
| DATE | JUNE 30, 2015 |
| PROJECT NUMBER | 215786 |

REGISTERED PROFESSIONAL ENGINEER MOHAMMADREZA MOSTAFA NO. 78649 EXP. 09/30/15 CIVIL STATE OF CALIFORNIA 06/30/15

HDR Engineering, Inc.

CITY OF PINOLE CALIFORNIA 1903

PINOLE/HERCULES WATER POLLUTION CONTROL PLANT UPGRADE CLIENT PN

# STRUCTURAL EFFLUENT PUMPING STATION AND SURGE TANK LOWER LEVEL MODIFICATIONS PLAN

0 1" 2"

| | |
|---|---|
| FILENAME | 215786–91S101 |
| SCALE | AS NOTED |
| SHEET | 91S101 |

FILE: 215786–91S101.dwg
DATE: Jun 30, 2015–11:34:53am, ranider

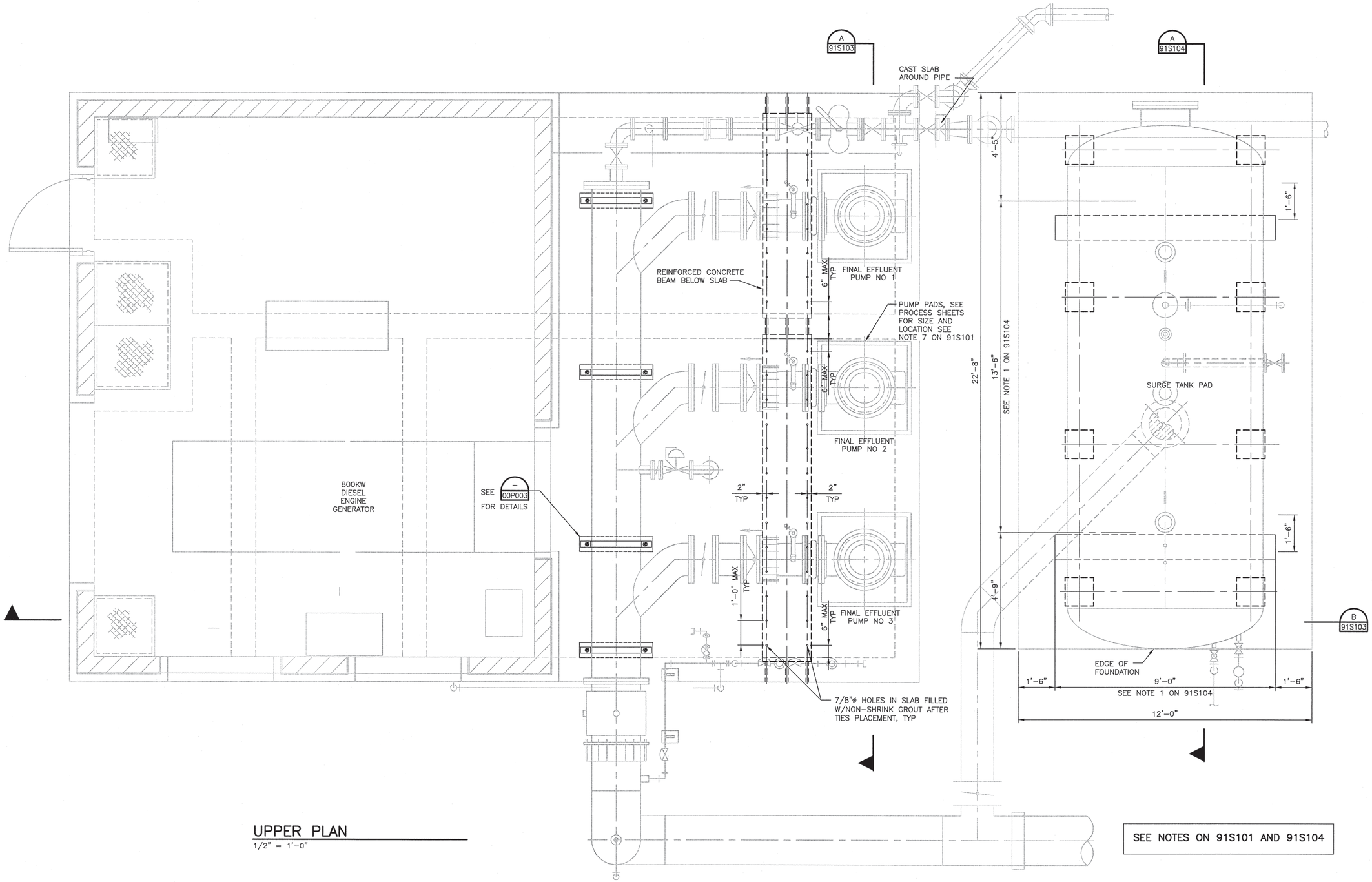


## UPPER PLAN

1/2" = 1'-0"

SEE NOTES ON 91S101 AND 91S104

FILE: 215786-91S102.dwg
DATE: Jun 30, 2015-9:18:09am, jwebb

HDR Engineering, Inc.

| ISSUE | DATE | DESCRIPTION |
|---|---|---|
| A | JUNE 2015 | ISSUED FOR BID |

| | |
|---|---|
| PROJECT MANAGER | C. OLSON |
| DESIGNED | M. MOSTAFA |
| DESIGNED | |
| CHECKED | O. TAVANGAR |
| DRAWN | D. ELDREDGE |
| DATE | JUNE 30, 2015 |
| PROJECT NUMBER | 215786 |

REGISTERED PROFESSIONAL ENGINEER
MOHAMMADREZA MOSTAFA
NO. 78649
EXP. 09/30/15
CIVIL
STATE OF CALIFORNIA
06/30/15

CITY OF PINOLE CALIFORNIA 1903

PINOLE/HERCULES
WATER POLLUTION
CONTROL PLANT UPGRADE
CLIENT PN

**STRUCTURAL**

**EFFLUENT PUMPING STATION AND SURGE TANK UPPER LEVEL MODIFICATIONS PLAN**

0 1" 2"

| | |
|---|---|
| FILENAME | 215786-91S102 |
| SCALE | AS NOTED |

SHEET **91S102**

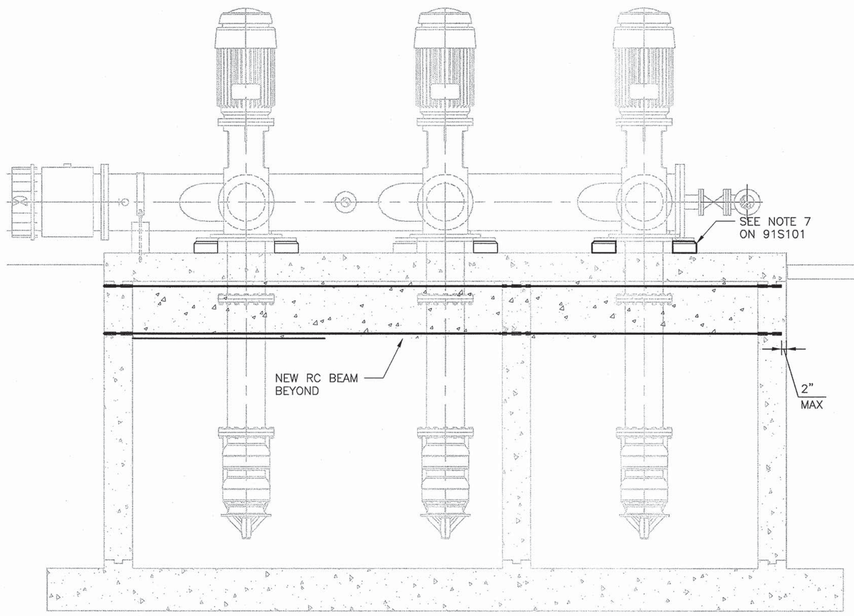


## SECTION
3/8" = 1'-0"
A 91S101

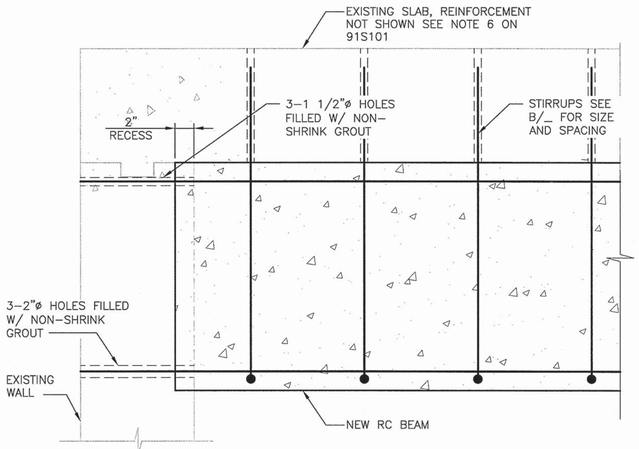


## DETAIL
1 1/2" = 1'-0"
1 91S101

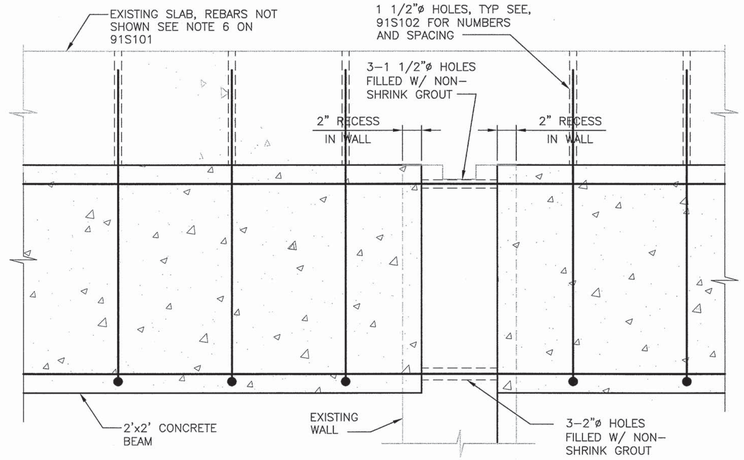


## DETAIL
1 1/2" = 1'-0"
2 91S101

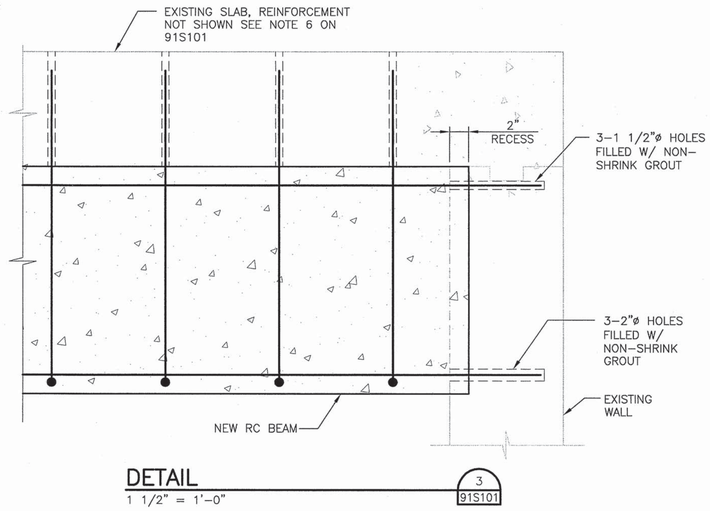


## DETAIL
1 1/2" = 1'-0"
3 91S101

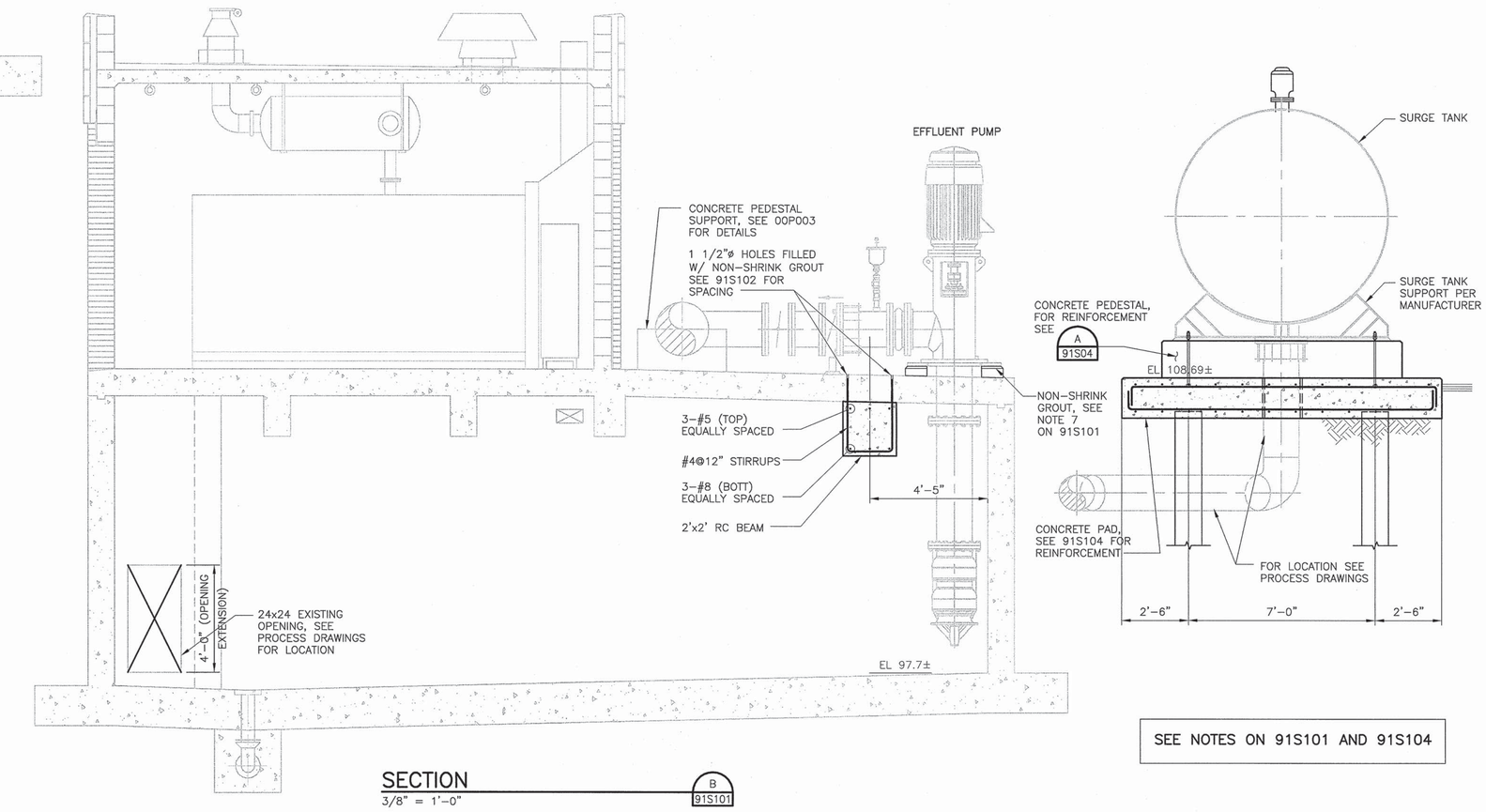


## SECTION
3/8" = 1'-0"
B 91S101

SEE NOTES ON 91S101 AND 91S104

FILE: 215786-91S103.dwg
DATE: Jun 30, 2015-11:35:35am, renider

HDR Engineering, Inc.

| ISSUE | DATE | DESCRIPTION |
|---|---|---|
| A | JUNE 2015 | ISSUED FOR BID |

| | |
|---|---|
| PROJECT MANAGER | C. OLSON |
| DESIGNED | M. MOSTAFA |
| DESIGNED | O. TAVANGAR |
| CHECKED | C. OLSON |
| DRAWN | D. ELDREDGE |
| DATE | JUNE 30, 2015 |
| PROJECT NUMBER | 215786 |

REGISTERED PROFESSIONAL ENGINEER
MOHAMMADREZA MOSTAFA
NO. 78649
EXP. 09/30/15
CIVIL
STATE OF CALIFORNIA
06/30/15

CITY OF PINOLE CALIFORNIA 1903

PINOLE/HERCULES
WATER POLLUTION
CONTROL PLANT UPGRADE
CLIENT PN

**STRUCTURAL**

**EFFLUENT PUMPING STATION AND SURGE TANK SECTIONS AND DETAILS**

0 1" 2"

| | |
|---|---|
| FILENAME | 215786-91S103 |
| SCALE | AS NOTED |

SHEET **91S103**

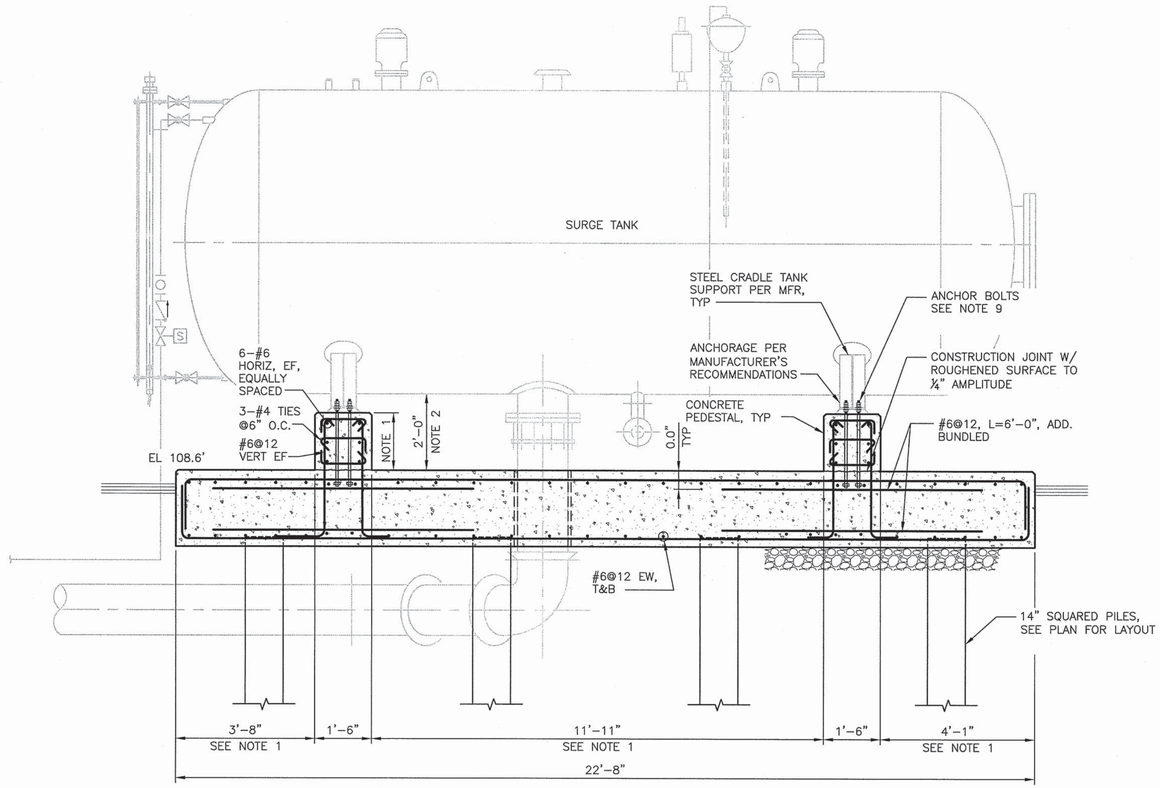


SECTION
1/2" = 1'-0"

A
91S102

NOTES:

1. LOCATION AND HEIGHT OF PEDESTAL IS DEFINED PER MANUFACTURERS RECOMMENDATIONS.
2. SEE PROCESS SHEETS FOR TANK ELEVATION AND PIPE LOCATIONS.
3. FOR GENERAL NOTES SEE SHEET 00S01 AND 00S02.
4. FOR SPECIAL INSPECTION REQUIREMENTS, SEE 00S03 AND 00S04.
5. FOR TYPICAL CONCRETE DETAILS SEE 00S05 THROUGH 00S08.
6. FOR TYPICAL REINFORCING DETAILS SEE 00S09.
7. ALL STEEL MEMBERS SHALL BE COATED PER SPECIFICATIONS.
8. FOR EXACT LOCATION OF THE TANK, SEE PROCESS DRAWINGS.
9. MANUFACTURER TO DESIGN THE ANCHORAGE FOR ALL POSSIBLE LOADS FROM TANK INCLUDING THE SURGE FORCES AND SEISMIC INDUCED LOADS.

FILE: 215786-91S104.dwg
DATE: Jun 30, 2015-8:45:09am, jwebb

HDR Engineering, Inc.

| ISSUE | DATE | DESCRIPTION |
|---|---|---|
| A | JUNE 2015 | ISSUED FOR BID |

| | |
|---|---|
| PROJECT MANAGER | C. OLSON |
| | |
| DESIGNED | M. MOSTAFA |
| DESIGNED | O. TAVANGAR |
| CHECKED | |
| DRAWN | D. ELDREDGE |
| DATE | JUNE 30, 2015 |
| | |
| PROJECT NUMBER | 215786 |

REGISTERED PROFESSIONAL ENGINEER
THEODORE H. KONTOYIANNIS
NO. 29378
EXP. 06/30/17
MECHANICAL
STATE OF CALIFORNIA
06/30/15

CITY OF PINOLE CALIFORNIA 1903

PINOLE/HERCULES
WATER POLLUTION
CONTROL PLANT UPGRADE
CLIENT PN

**STRUCTURAL**

**EFFLUENT PUMP STATION**
**SURGE TANK, SECTION**

0 1" 2"

| | |
|---|---|
| FILENAME | 215786-91S104 |
| SCALE | AS NOTED |

SHEET
**91S104**

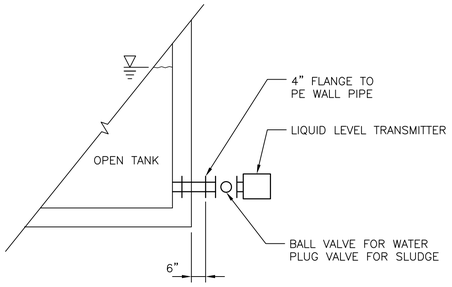


## OPEN TANK FLANGE MOUNTED LIQUID LEVEL TRANSMITTER

1

NOT TO SCALE

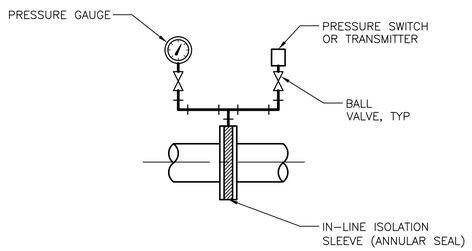


## IN-LINE ISOLATION SLEEVE PRESSURE SWITCH/TRANSMITTER

2

NONE

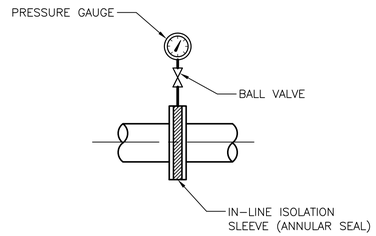


## IN-LINE ISOLATION SLEEVE PRESSURE GAUGE

3

NONE

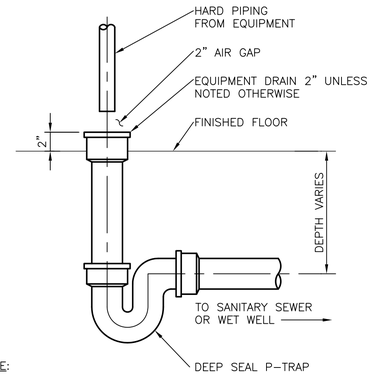


NOTE:

1. IF PROCESS DRAINS (NO SANITARY SEWAGE), P-TRAP NOT REQUIRED.

## TRAPPED EQUIPMENT DRAIN

4

NTS

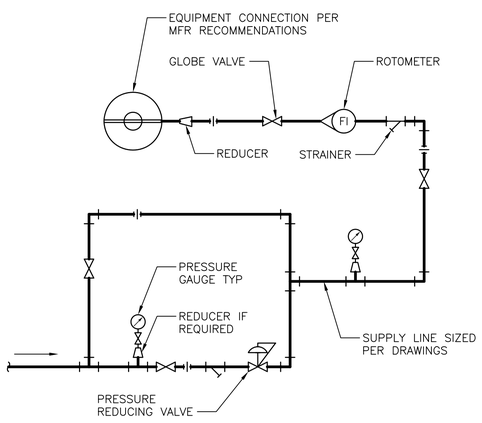


NOTE:

1. LOCATE WITHIN 2 FEET OF PUMP ON FRP MODULAR STRUT SUPPORT STRUCTURE.
2. ALL VALVES ARE BALL VALVES UNLESS SPECIFICALLY NOTED OTHERWISE.

## SINGLE MECHANICAL SEAL WATER SYSTEM

5

NONE

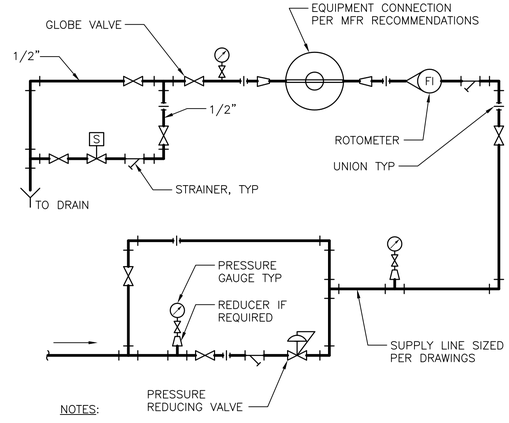


NOTES:

1. LOCATE WITHIN 2 FEET OF PUMP ON FRP MODULAR STRUT SUPPORT STRUCTURE.
2. ALL VALVES ARE BALL VALVES UNLESS SPECIFICALLY NOTED OTHERWISE.

## DOUBLE MECHANICAL SEAL WATER SYSTEM

6

NONE

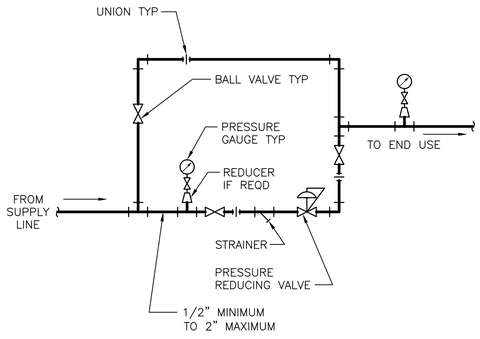


## PRESSURE REDUCING STATION (PRS)

7

NONE

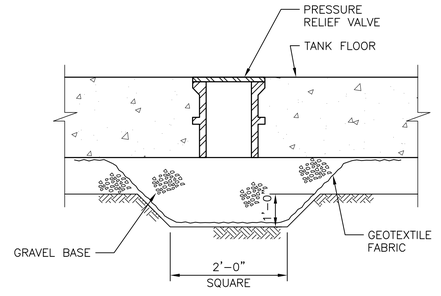


## HYDROSTATIC PRESSURE RELIEF VALVE

8

NONE

FILE: 215786-00P001.dwg
DATE: Oct 07, 2015-4:28:15pm, rsnider

HDR Engineering, Inc.

| ISSUE | DATE | DESCRIPTION |
|---|---|---|
| A | JUNE 2015 | ISSUED FOR BID |

| | |
|---|---|
| PROJECT MANAGER | C. OLSON |
| DESIGNED | T. KONTONICKAS |
| DESIGNED | R. NATOLI |
| CHECKED | C. OLSON |
| DRAWN | B.DOWN |
| DATE | JUNE 30, 2015 |
| PROJECT NUMBER | 215786 |

REGISTERED PROFESSIONAL ENGINEER
CRAIG A. OLSON
NO. 39819
EXP. 12/31/15
CIVIL
STATE OF CALIFORNIA
06-30-15

CITY OF PINOLE CALIFORNIA 1903

PINOLE/HERCULES
WATER POLLUTION
CONTROL PLANT UPGRADE
CLIENT PN

**PROCESS**

**STANDARD DETAILS 1**

0 1" 2"

| FILENAME | 215786-00P001 |
|---|---|
| SCALE | AS NOTED |

SHEET **00P001**

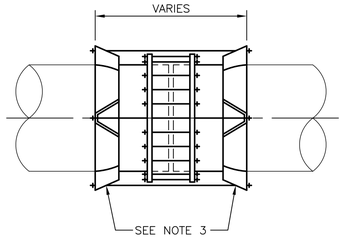


NOTES:

1. PROVIDE COUPLING WHERE NOTED ON DRAWINGS.
2. DESIGN HARNESS IN ACCORDANCE WITH AWWA M–11 MANUAL FOR STEEL PIPE.
3. LUGS FOR PIPE < 14" AND HARNESS RINGS FOR PIPE ≥ 14"

## HARNESSED MECHANICAL COUPLING FOR STEEL PIPE

1 – NONE

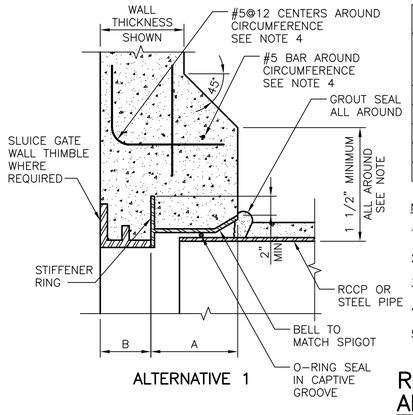


ALTERNATIVE 1

| FITTING SCHEDULE | | |
|---|---|---|
| PIPE DIAMETER | MINIMUM WALL FITTING LENGTH | MINIMUM WALL THIMBLE |
| | A | B |
| 16"–36" | 8" | 8" |
| 42"–54" | 9" | 8" |
| 60" | 10" | 8" |
| 96" | 12" | NA |

NOTES:

1. FOR REINFORCEMENT OF PENETRATION SEE STRUCTURAL DRAWINGS.
2. SEE SECTION 15060 FOR JOINT LENGTH REQUIREMENTS AT STRUCTURES.
3. TEMPORARILY FULLY SUPPORT AND CENTER PIPE PRIOR TO INSTALLATION OF MODULAR MECHANICAL SEAL SYSTEM.
4. THICKENED WALL SECTION AND CIRCUMFERENTIAL REBAR NOT REQUIRED WHEN WALL THICKNESS > A PLUS B.
5. FOR WALL THICKNESS LESS THAN 8 INCHES, PROVIDE SINGLE MODULAR MECHANICAL SEAL. FOR WALL THICKNESS EQUAL TO OR GREATER THAN 8 INCHES, PROVIDE TWO MODULAR MECHANICAL SEALS.

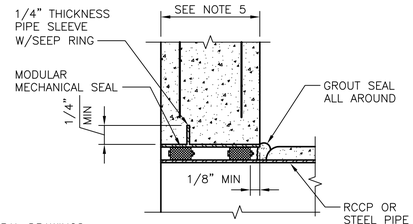


ALTERNATIVE 2

## RCCP/STEEL WALL PIPE CONNECTION ALTERNATIVES 1 & 2

2 – NOT TO SCALE

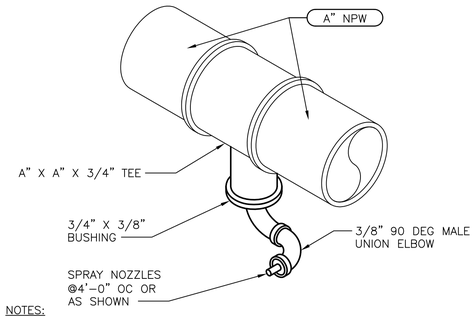


NOTES:

1. SPRAY DIRECTION SHALL BE SHOWN ON DRAWINGS.
2. SIZE OF NPW PIPE, A", AS SHOWN ON DRAWINGS.

## SPRAY NOZZLE

3 – NONE

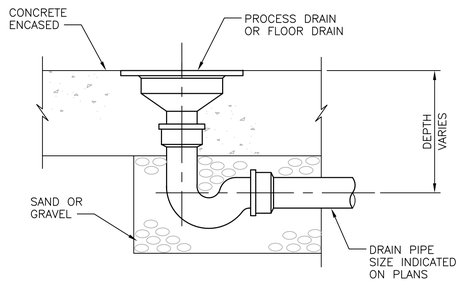


NOTE:
PROVIDE P–TRAPS ON ALL FLOOR DRAINS.

## FLOOR DRAIN DETAIL

4 – NTS

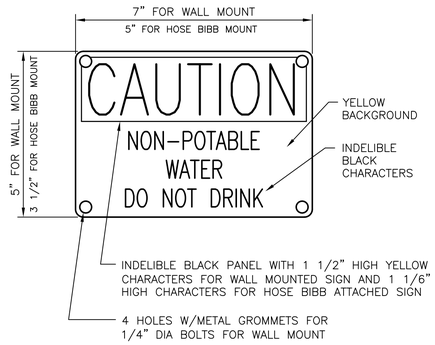


NOTES:

1. MATERIAL TO BE SIMI–RIGID BUTYRATE OR APPROVED EQUAL, AS MANUFACTURED BY W.H. BRADY CO., MILWAUKEE, WIS. 53201 OR EQUAL.
2. COLORS AND LETTER SIZES TO BE PER OSHA STANDARDS FOR CAUTION SIGNS.
3. PROVIDE AND INSTALL THIS SIGN AT ALL HOSE BIBB LOCATIONS DELIVERING NON–POTABLE WATER.
4. ATTACH TO HOSE BIBB WITH PLASTIC STRAPS AROUND VERTICAL RISER, OR SUSPEND FROM VALVE W/RETAINER CHAIN, AS DIRECTED BY OWNER.

## NON–POTABLE WATER WARNING SIGN AT ALL HOSE BIBBS HB–1

5 – NTS

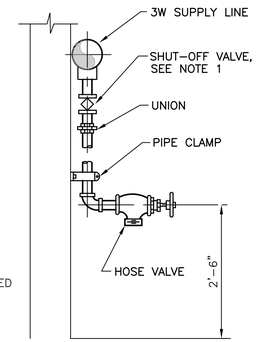


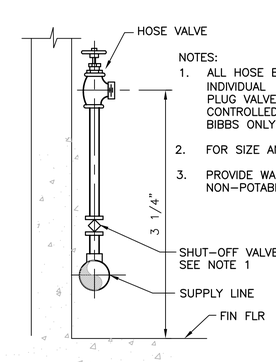


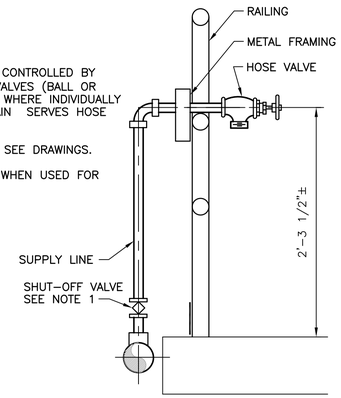


## HOSE BIBB HB–1

6 – NTS

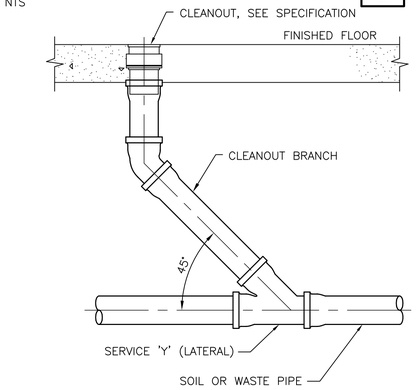


NOTES:

1. CLEANOUTS SHALL BE RECESSED 1/2" BELOW FINISHED SURFACE. COVER SHALL BE ACCESSABLE FOR GENERAL MAINTENANCE.

## CLEANOUT THRU FLOOR

7 – NTS

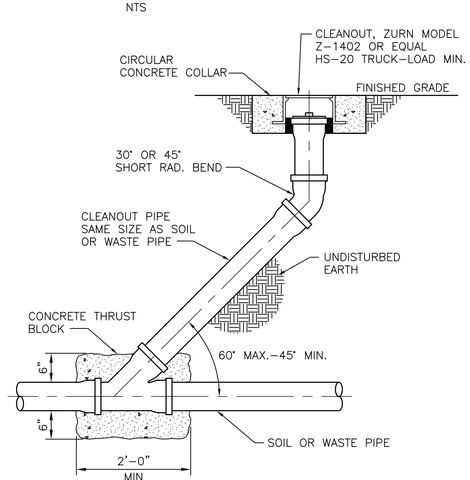


## CLEAN OUT AT GRADE DETAIL

8 – NTS

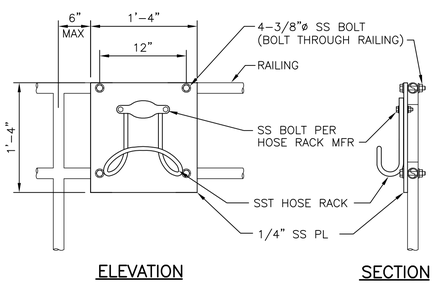


NOTE:
REMOVE ALL BURRS AND SHARP EDGES.

## RAILING MOUNTED HOSE RACK (HR–1)

9 – NTS

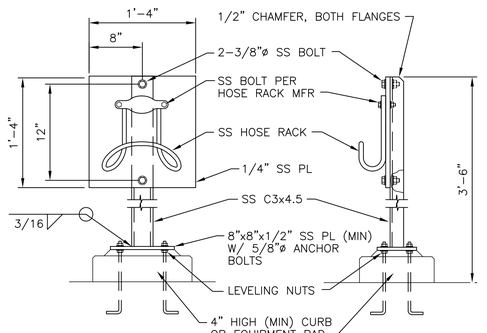


NOTE:
REMOVE ALL BURRS AND SHARP EDGES.

## FLOOR MOUNTED HOSE RACK (HR–2)

10 – NTS

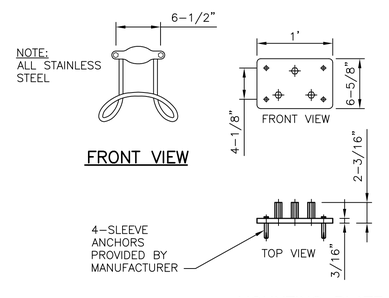


## WALL MOUNTED HOSE RACK (HR–3)

11 – NTS

FILE: 215786–00P002.dwg
DATE: Oct 07, 2015–4:28:21am, rsnider

HDR Engineering, Inc.

| ISSUE | DATE | DESCRIPTION |
|---|---|---|
| A | JUNE 2015 | ISSUED FOR BID |

| | |
|---|---|
| PROJECT MANAGER | C. OLSON |
| DESIGNED | T. KONTONICKAS |
| DESIGNED | R. NATOLI |
| CHECKED | C. OLSON |
| DRAWN | B.DOWN |
| DATE | JUNE 30, 2015 |
| PROJECT NUMBER | 215786 |

REGISTERED PROFESSIONAL ENGINEER THEODORE H. KONTONICKAS NO. 29378 EXP. 06/30/17 MECHANICAL STATE OF CALIFORNIA 06-30-15

CITY OF PINOLE CALIFORNIA 1903

PINOLE/HERCULES WATER POLLUTION CONTROL PLANT UPGRADE CLIENT PN

**PROCESS**

**STANDARD DETAILS 2**

0 1" 2"

| FILENAME | 215786–00P002 |
|---|---|
| SCALE | AS NOTED |

SHEET **00P002**

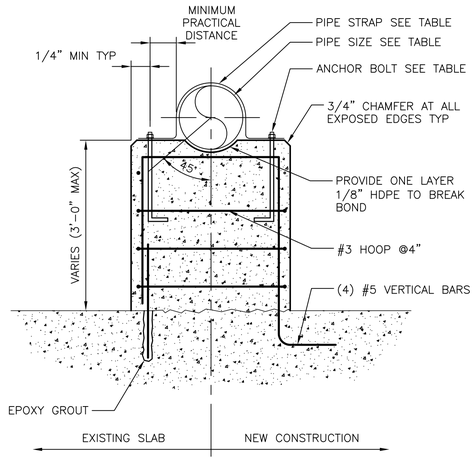


| PIPE SIZE DIA | PIPE STRAP | ANCHOR BOLTS DIA | PEDESTAL THICKNESS |
|---|---|---|---|
| 6"–12" | 1/4"x2" | 1/2" | 12" |
| 14"–24" | 3/8"x2 1/2" | 5/8" | 16" |
| 30"–48" | 1/2"x3" | 3/4" | 24" |

## CONCRETE PEDESTAL SUPPORT
1
NOT TO SCALE

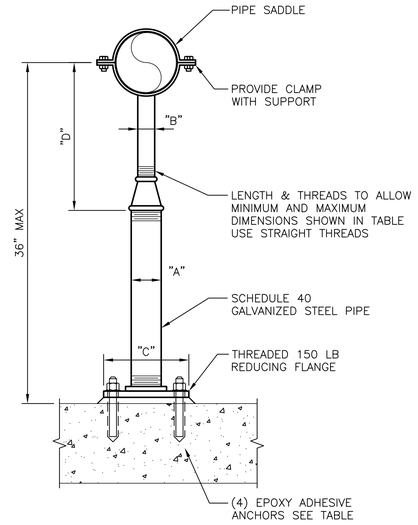


FLOOR PIPE SUPPORT SCHEDULE
DIMENSIONS IN INCHES

| PIPE SIZE | "A" | "B" | "C" | "D" MINIMUM | "D" MAXIMUM | ANCHORS DIA | ANCHORS EMBED |
|---|---|---|---|---|---|---|---|
| ≤ 2 1/2 | 2 1/2 | 1 1/2 | 9 | 8 | 13 | 5/8 | 5 |
| 3 | 2 1/2 | 1 1/2 | 9 | 8 1/2 | 13 1/2 | 5/8 | 5 |
| 3 1/2 | 2 1/2 | 1 1/2 | 9 | 8 1/2 | 13 1/2 | 5/8 | 5 |
| 4 | 3 | 2 1/2 | 9 | 9 1/2 | 14 | 5/8 | 5 |
| 6 | 3 | 2 1/2 | 9 | 10 1/2 | 15 1/2 | 5/8 | 5 |
| 8 | 3 | 2 1/2 | 9 | 11 1/2 | 16 1/2 | 5/8 | 5 |
| 10 | 3 | 2 1/2 | 9 | 13 1/2 | 18 1/2 | 5/8 | 5 |
| 12 | 3 | 2 1/2 | 9 | 15 | 19 1/2 | 5/8 | 5 |
| 14 | 4 | 3 | 11 | 16 1/2 | 20 1/2 | 3/4 | 6 5/8 |
| 16 | 4 | 3 | 11 | 17 1/2 | 22 1/2 | 3/4 | 6 5/8 |
| 18 | 6 | 3 1/2 | 13 1/2 | 19 1/2 | 24 | 3/4 | 6 5/8 |
| 20 | 6 | 3 1/2 | 13 1/2 | 21 | 25 1/2 | 3/4 | 6 5/8 |
| 24 | 6 | 4 | 13 1/2 | 23 1/2 | 28 1/2 | 3/4 | 6 5/8 |

## ADJUSTABLE PIPE SUPPORT
2
NOT TO SCALE

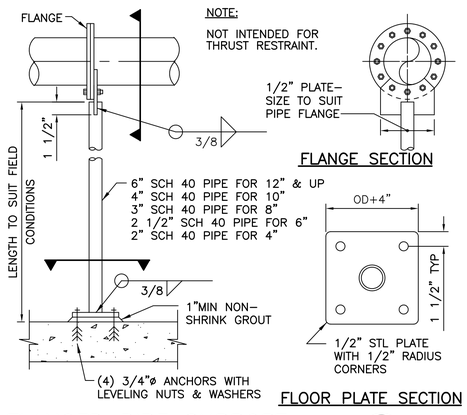


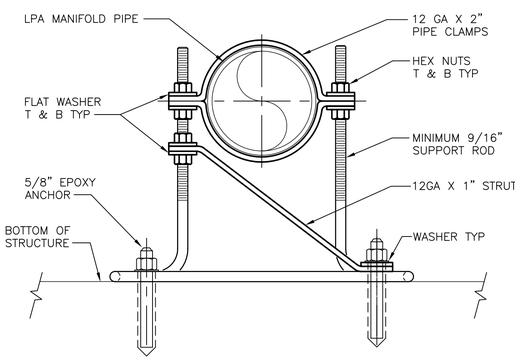


## SUBMERGED LPA PIPING SUPPORT
3
NOT TO SCALE

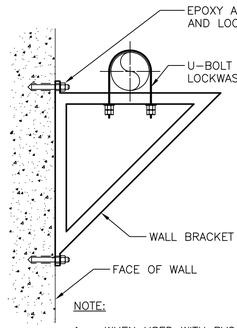


| PIPE SIZE | SPACING | ANCHOR BOLT SIZE FOR STANDARD BRACKETS | U–BOLT DIA |
|---|---|---|---|
| 4" | 10' | 3/4" | 1/2" |
| 6" | 15' | 1" | 5/8" |
| 8" | 15' | 1" | 5/8" |
| 10" | 20' | 1" | 3/4" |
| 12" | 20' | 1" | 7/8" |
| 14" | 20' | 1" | 7/8" |
| 16" | 20' | 1" | 7/8" |
| 18" | 16' | 1" | 1" |
| 20" | 13' | 1" | 1" |
| 24" | 10' | 1" | 1" |

NOTE:
1. WHEN USED WITH PVC OR FIBERGLASS PIPE, PROVIDE STEEL SHIELD AROUND PIPE AT CLAMP WITH LOOSE FIT; COPPER TUBES TO HAVE STRIP OF RUBBER FABRIC.

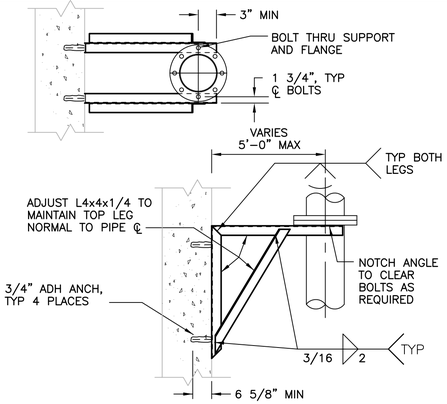


## RISER PIPE SUPPORT
4
NTS

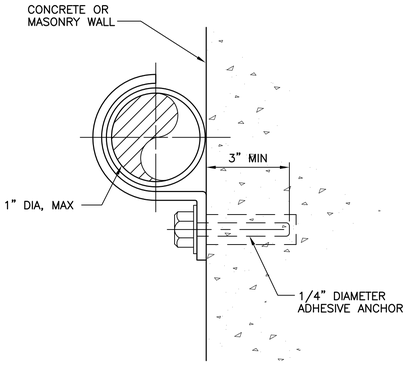


## WALL BRACKET
5
NOT TO SCALE

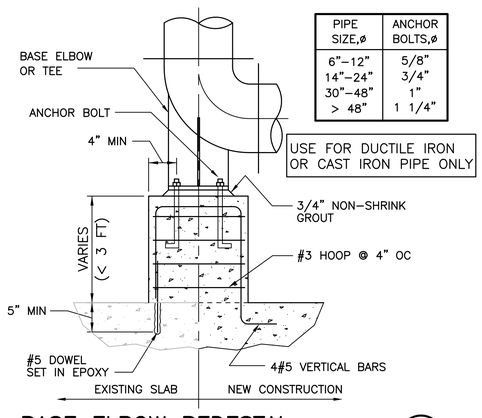


| PIPE SIZE,ø | ANCHOR BOLTS,ø |
|---|---|
| 6"–12" | 5/8" |
| 14"–24" | 3/4" |
| 30"–48" | 1" |
| > 48" | 1 1/4" |

USE FOR DUCTILE IRON OR CAST IRON PIPE ONLY

## ONE HOLE CLAMP
6
NTS

| PIPE SUPPORT MATERIAL SCHEDULE | |
|---|---|
| CORROSIVE AREAS: | MATERIAL |
| ALL WET AND OUTSIDE AREAS | 316 STAINLESS STEEL |
| CHEMICAL AREAS | FRP |
| NON–CORROSIVE AREAS: | MATERIAL |
| INTERIOR AREAS | HOT DIPPED GALVANIZED STEEL |

NOTES:
1. ALL ANCHOR BOLTS TO BE 316 SST REGARDLESS OF INSTALLED AREA.
2. ALL ANCHOR BOLTS TO BE EPOXY.

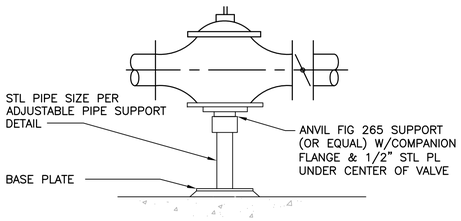


## VALVE SUPPORT DETAIL
7
NTS

## FLANGED PIPE SUPPORT
8
NTS

## BASE ELBOW PEDESTAL
9
NTS

FILE: 215786-00P003.dwg
DATE: Oct 07, 2015-4:28:27am, rsnider

HDR Engineering, Inc.

| ISSUE | DATE | DESCRIPTION |
|---|---|---|
| A | JUNE 2015 | ISSUED FOR BID |

| | |
|---|---|
| PROJECT MANAGER | C. OLSON |
| DESIGNED | T. KONTONICKAS |
| DESIGNED | R. NATOLI |
| CHECKED | C. OLSON |
| DRAWN | B.DOWN |
| DATE | JUNE 30, 2015 |
| PROJECT NUMBER | 215786 |

REGISTERED PROFESSIONAL ENGINEER
THEODORE H. KONTONICKAS
NO. 29378
EXP. 06/30/17
MECHANICAL
STATE OF CALIFORNIA
06-30-15

CITY OF PINOLE CALIFORNIA 1903

PINOLE/HERCULES
WATER POLLUTION
CONTROL PLANT UPGRADE
CLIENT PN

**PROCESS**

**STANDARD DETAILS 3**

0 1" 2"

| FILENAME | 215786-00P003 |
|---|---|
| SCALE | AS NOTED |

SHEET
**00P003**

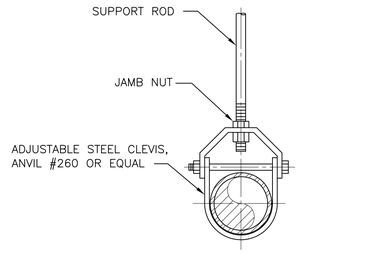


1/2" THROUGH 24" PIPE

## PIPE HANGER

NTS

1

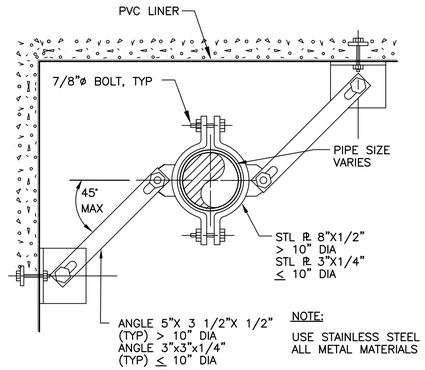


NOTE:

USE STAINLESS STEEL FOR ALL METAL MATERIALS

## VERTICAL PIPE HANGER

NTS

2

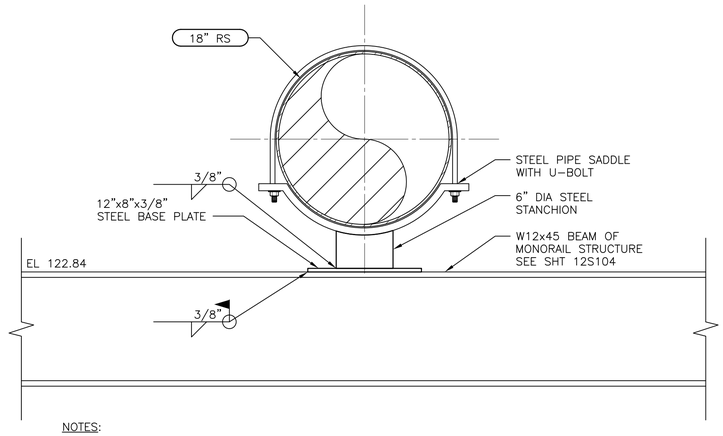


NOTES:

1. CONTRACTOR TO FABRICATE SADDLE STANCHION AND BASE PLATE TO FIT WITHIN CLEAR DIMENSION BETWEEN PIPE AND W12x45 BEAM.
2. SADDLE SUPPORT WITH U-BOLT TO BE SIMILAR TO ANVIL FIGURE 259.

## 18" RS PIPE SUPPORT FROM MONORAIL STRUCTURE

1 1/2" = 1'-0"

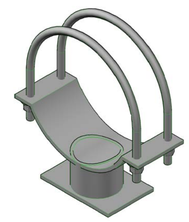

PERSPECTIVE VIEW

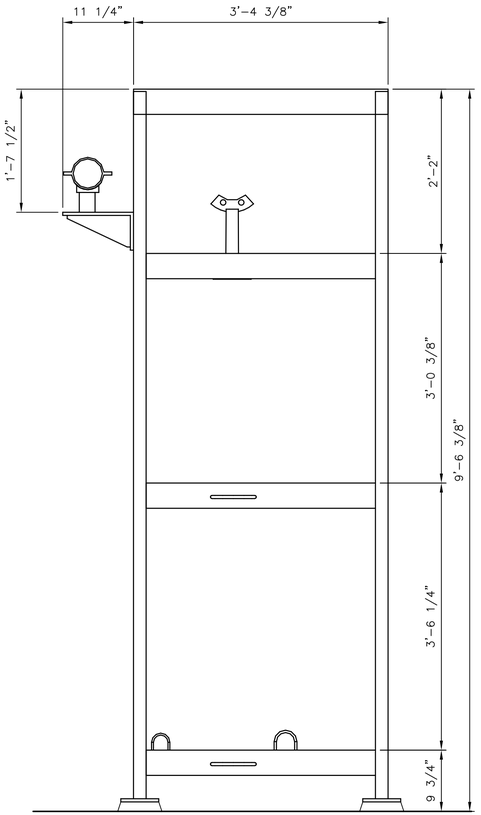


## PIPE SUPPORT @ GRIT VORTEX WASHER

1" = 1'-0"

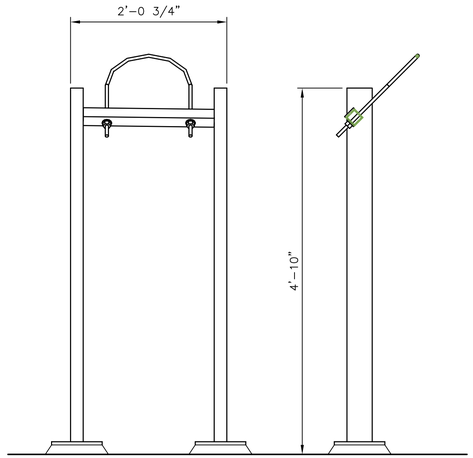


## PIPE SUPPORT @ WASHER/COMPACTOR DISCHARGE

1" = 1'-0"

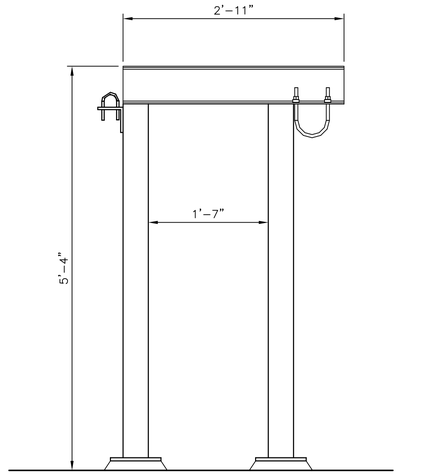


## PIPE SUPPORT @ SCREW CONVEYOR

1" = 1'-0"

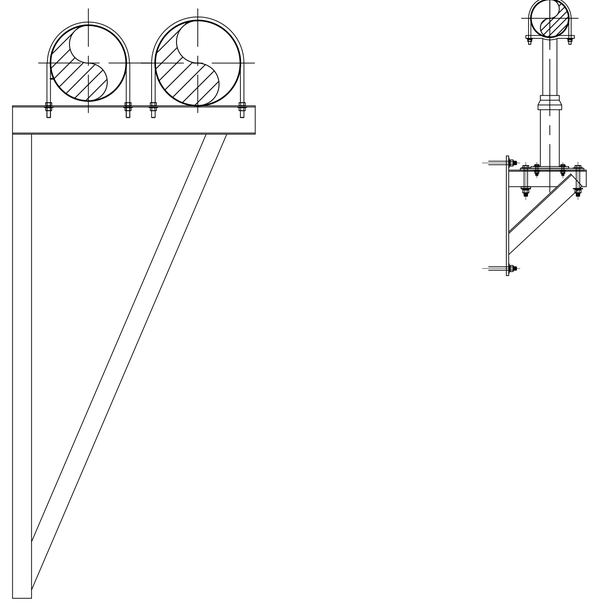

FILE: 215786-00P004.dwg
DATE: Oct 07, 2015-4:28:35am, rsnider

HDR Engineering, Inc.

| ISSUE | DATE | DESCRIPTION |
|---|---|---|
| | | |
| | | |
| | | |
| | | |
| | | |
| | | |
| A | JUNE 2015 | ISSUED FOR BID |

| | |
|---|---|
| PROJECT MANAGER | C. OLSON |
| | |
| DESIGNED | T. KONTONICKAS |
| DESIGNED | |
| CHECKED | C. OLSON |
| DRAWN | B. DOWN |
| DATE | JUNE 30, 2015 |
| | |
| PROJECT NUMBER | 215786 |

REGISTERED PROFESSIONAL ENGINEER
THEODORE H. KONTONICKAS
NO. 29378
EXP. 06/30/17
MECHANICAL
STATE OF CALIFORNIA
06-30-15

CITY OF PINOLE CALIFORNIA 1903

PINOLE/HERCULES
WATER POLLUTION
CONTROL PLANT UPGRADE
CLIENT PN

**PROCESS**

**STANDARD DETAILS 4**

0 1" 2"

| | |
|---|---|
| FILENAME | 215786-00P004 |
| SCALE | AS NOTED |

SHEET **00P004**

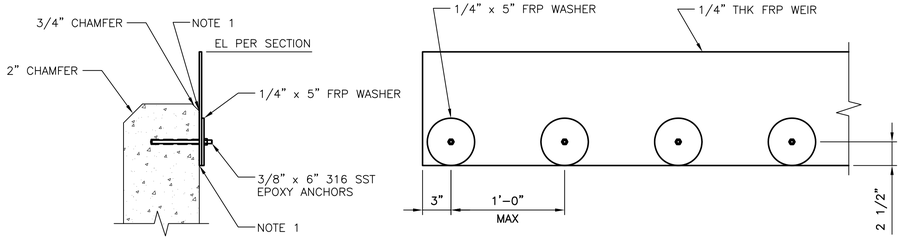


## FRP RECTANGULAR WEIR PLATE DETAIL

NTS

1

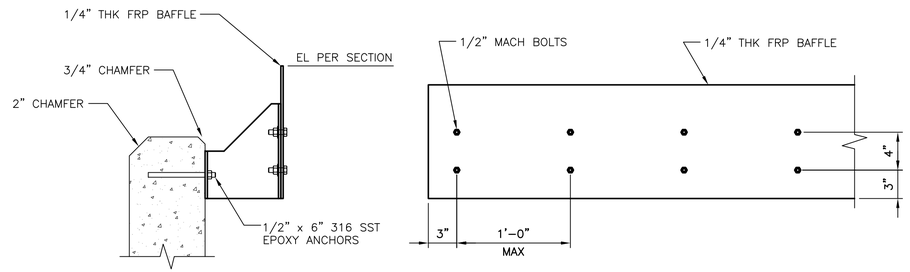


## FRP BAFFLE DETAIL

NTS

2

NOTES:

1. SEAL BETWEEN FRP WEIR PLATE AND CONCRETE SURFACE WITH SILICONE SEALANT ON ALL FRP WEIR EDGES AND JOINTS.

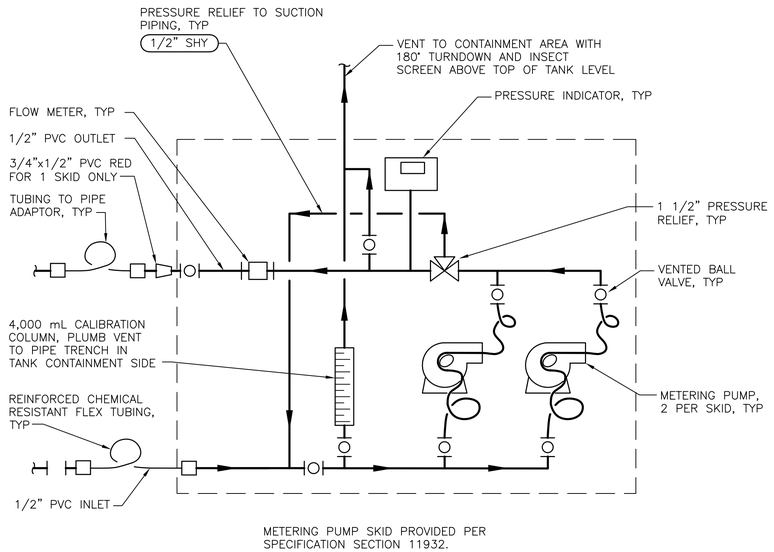


METERING PUMP SKID PROVIDED PER SPECIFICATION SECTION 11932.

## METERING PUMP SYSTEM SCHEMATIC

NTS

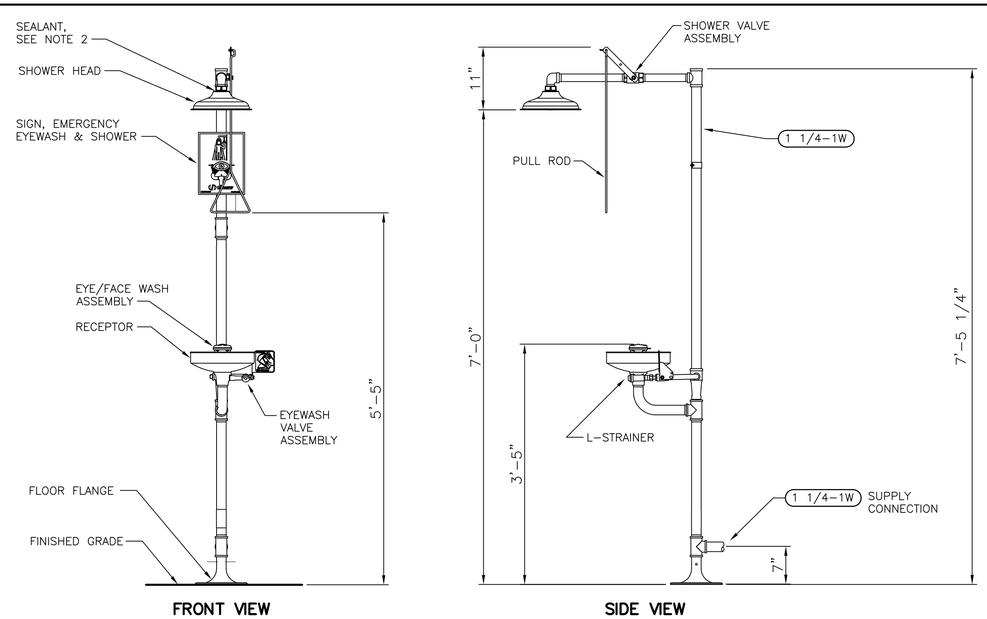


NOTES:

1. EMERGENCY EYEWASH AND SHOWER IS HAWS MODEL 8300-8309. SEE SPECIFICATION SECTION 15440.
2. DO NOT USE REGULAR PIPE SEALANT. IF NECESSARY, USE DOW CORNING 832. PLACE 5 SMALL BEADS ON MALE THREADS JUST ABOVE FIRST THREAD.

## OUTDOOR EMERGENCY SHOWER & EYEWASH (ESEW)

NTS

FILE: 215786-00P005.dwg
DATE: Oct 07, 2015-4:28:41am, rsnider

HDR Engineering, Inc.

| ISSUE | DATE | DESCRIPTION |
|---|---|---|
| A | JUNE 2015 | ISSUED FOR BID |

| | |
|---|---|
| PROJECT MANAGER | C. OLSON |
| DESIGNED | T. KONTONICKAS |
| DESIGNED | |
| CHECKED | C. OLSON |
| DRAWN | B. DOWN |
| DATE | JUNE 30, 2015 |
| PROJECT NUMBER | 215786 |

REGISTERED PROFESSIONAL ENGINEER
THEODORE H. KONTONICKAS
NO. 29378
EXP. 06/30/17
MECHANICAL
STATE OF CALIFORNIA
06-30-15

CITY OF PINOLE CALIFORNIA 1903

PINOLE/HERCULES
WATER POLLUTION
CONTROL PLANT UPGRADE
CLIENT PN

**PROCESS**

**STANDARD DETAILS 5**

0 1" 2"

| | |
|---|---|
| FILENAME | 215786-00P005 |
| SCALE | AS NOTED |

SHEET **00P005**

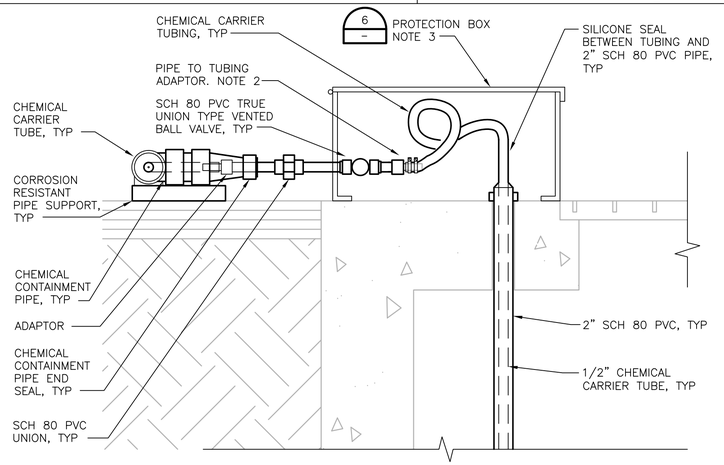


## CHEMICAL DIFFUSER/PIPE INSTALLATION DETAIL 1

1 1/2" = 1'–0"

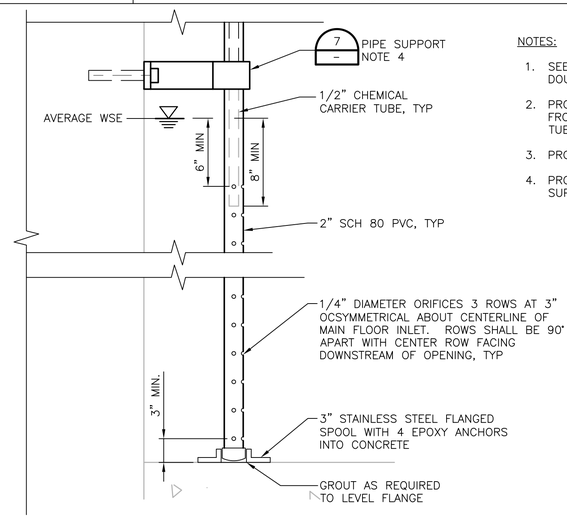


NOTES:

1. SEE PROCESS DWGS FOR CHEMICAL CARRIER AND DOUBLE CONTAINMENT PIPE SIZES.
2. PROVIDE PIPE TO TUBING ADAPTER TO TRANSIT FROM CHEMICAL PIPE TO ONE PIPE SIZE DOWN TUBING.
3. PROVIDE PROTECTION BOX AS NEEDED.
4. PROVIDE CHEMICAL AND CORROSION RESISTANT PIPE SUPPORT.

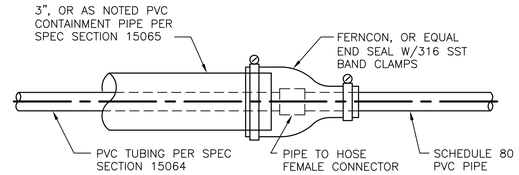


NOTES:

1. CONTRACTOR SHALL PROVIDE SCHEDULE 80 PVC PIPE REDUCERS ON CHEMICAL PIPE AS REQUIRED TO ACCOMODATE END SEAL DIMENSIONS.
2. TIGHT END SEAL CLAMPS PER MANUFACTURER'S RECOMMENDATIONS FOR PRESSURE TESTING OF CONTAINMENT PIPING.
3. DOUBLE CONTAINMENT PIPING SHALL BE PRESSURE TESTED PER SPECIFICATION SECTION 15060.

## DOUBLE/SINGLE WALL PIPE TRANSITION DETAIL 2

NTS

NOTES:

1. SEE PLAN DWGS FOR SAMPLING LOCATIONS AND PIPING SERVICES.
2. INSTALL SAMPLE INTAKE HORIZONTALLY OR VERTICALLY AS SHOWN ON PROCESS DWGS. FOR VERTICAL MOUNTING, PROVIDE PIPE SUPPORT SIMILAR TO DETAIL 1 OF THIS SHEET.
3. INSERT SAMPLING TUBE INTO 6" SAMPLE INTAKE PIPE (SIMILAR ARRANGEMENT TO DETAIL 1 OF THIS SHEET) FOR RS COMPOSITE SAMPLING. TYP AT 3 LOCATIONS.

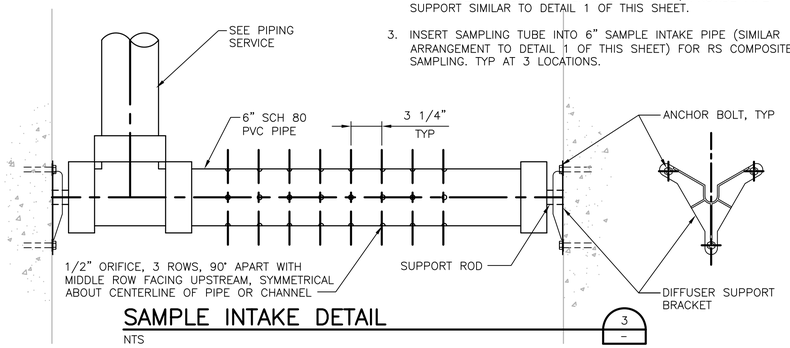


## SAMPLE INTAKE DETAIL 3

NTS

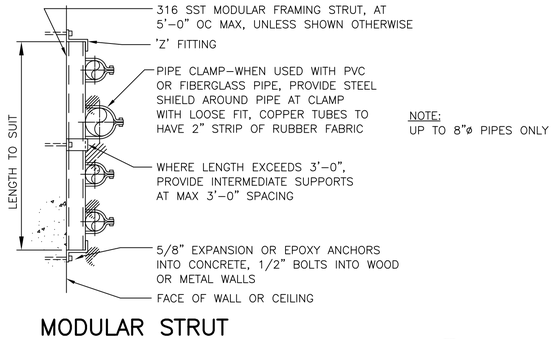


NOTE:
UP TO 8"ø PIPES ONLY

## MODULAR STRUT PIPE SUPPORT DETAIL 5

NTS

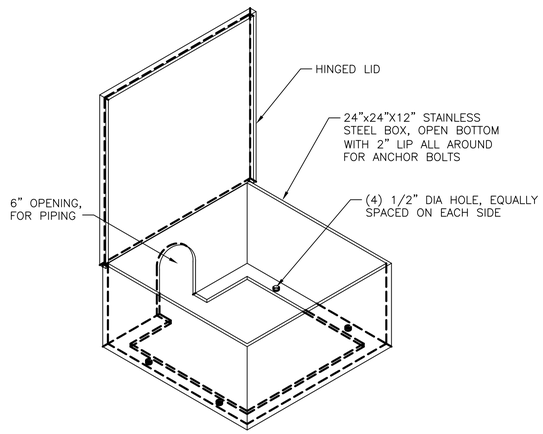


## TUBING ENTRY PROTECTION BOX 6

NTS

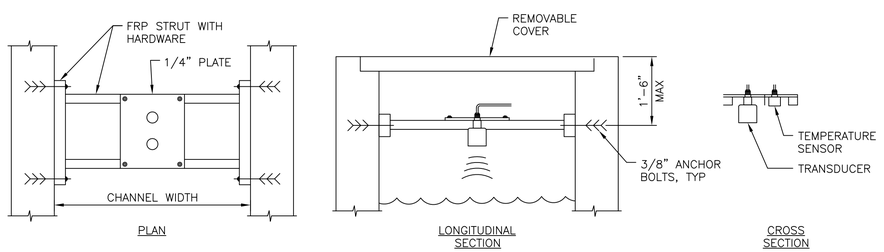


## TRANSDUCER AND TEMPERATURE SENSOR MOUNTING DETAIL 4

NTS

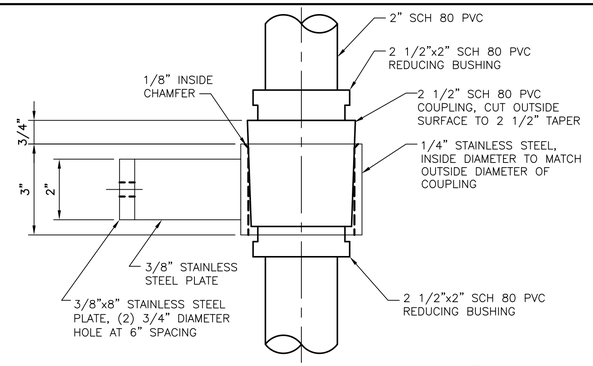


## PIPE SUPPORT 7

NTS

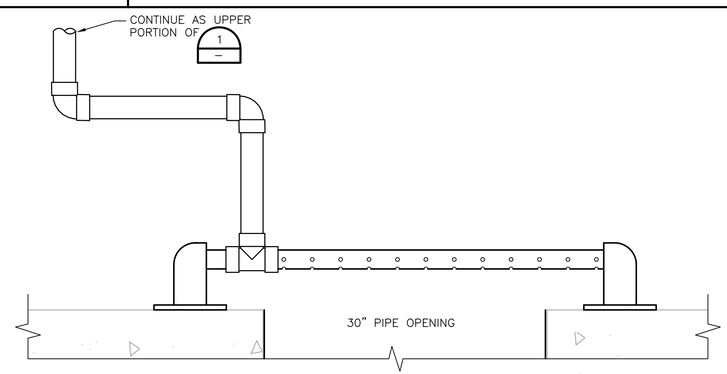


## CHEMICAL DIFFUSER @ GRIT BASIN PI 7

NTS

FILE: 215786-00P006.dwg
DATE: Oct 07, 2015-4:28:47am, rsnider

HDR Engineering, Inc.

| ISSUE | DATE | DESCRIPTION |
|---|---|---|
| A | JUNE 2015 | ISSUED FOR BID |

| | |
|---|---|
| PROJECT MANAGER | C. OLSON |
| DESIGNED | T. KONTONICKAS |
| DESIGNED | |
| CHECKED | C. OLSON |
| DRAWN | B. DOWN |
| DATE | JUNE 30, 2015 |
| PROJECT NUMBER | 215786 |

REGISTERED PROFESSIONAL ENGINEER
CRAIG A. OLSON
NO. 39819
EXP. 12/31/15
CIVIL
STATE OF CALIFORNIA
06-30-15

CITY OF PINOLE CALIFORNIA 1903

PINOLE/HERCULES
WATER POLLUTION
CONTROL PLANT UPGRADE
CLIENT PN

**PROCESS**

**STANDARD DETAILS 6**

0 1" 2"

| | |
|---|---|
| FILENAME | 215786–00P006 |
| SCALE | AS NOTED |

SHEET **00P006**

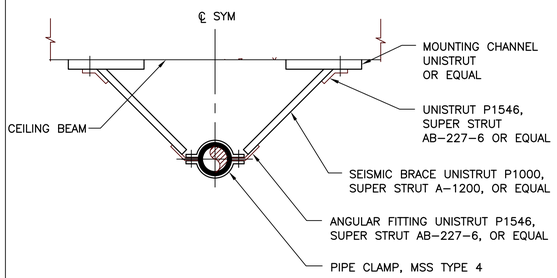


## TYPE A SEISMIC LATERAL BRACING

NTS

1

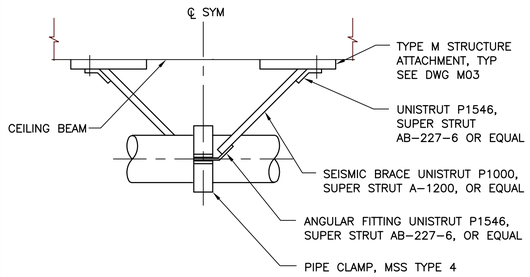


## TYPE A SEISMIC LONGITUDINAL BRACING

NTS

2

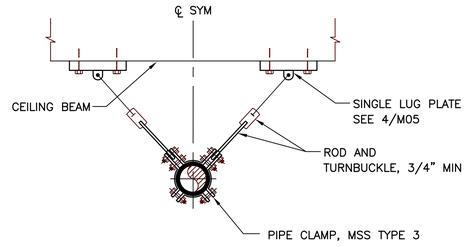


## TYPE B SEISMIC LATERAL BRACING

NTS

3

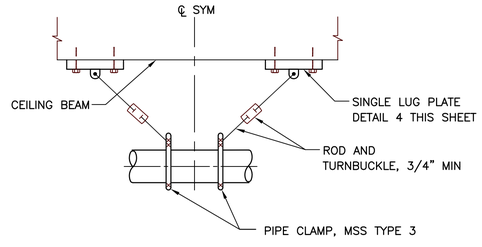


## TYPE B SEISMIC LATERAL BRACING

NTS

4

| TABLE C – PIPE SPAN FOR SEISMIC BRACING | | |
|---|---|---|
| NORMAL PIPE SIZES (INCHES) | MAXIMUM PIPE SPAN (FEET) | ROD SIZE (INCHES) |
| 2 | 15 | 3/8 |
| 2–1/2 | 15 | 3/8 |
| 3 | 15 | 3/8 |
| 4 | 15 | 3/8 |
| 6 | 20 | 1/2 |
| 8 | 20 | 5/8 |
| 10 | 30 | 4/5 |
| 12 | 30 | 1 |
| 14 | 30 | 1 |
| 16 | 35 | 1 |
| 18 | 35 | 1 |

| TABLE D – HANGER TEMPERATURE AND MATERIALS FOR SEISMIC BRACING | | | | | | | | | | | |
|---|---|---|---|---|---|---|---|---|---|---|---|
| X INDICATES PIPE HANGERS SUITABLE FOR SEISMIC BRACING AT CONDITIONS LISTED BELOW | SEE DWG M02 FOR PIPE HANGER TYPE | | | | | | | | | | |
| | 1 | 2 | 3 | 4 | 5 | 6 | 7 | 8 | 9 | 10 | 11 |
| SERVICE TEMPERATURE | | | | | | | | | | | |
| 33\F–59\F OR INSULATED | | | X | | | | | | X | | X |
| 120\F–450\F UNINSULATED | X | X | X | | | X | X | | X | X | X |
| 60\F–119\F | X | X | X | | | X | X | | X | X | X |
| PIPING MATERIALS | | | | | | | | | | | |
| STEEL | X | X | X | | | X | X | | X | | X |
| COPPER | | X | | | | X | X | | | | |
| PLASTIC | X | X | | | | X | X | | | | X |
| CAST IRON | X | X | | | | X | X | | | X | X |

SEISMIC BRACING NOTES:

1. ALL PIPES SHALL BE BRACED TO RESIST LATERAL AND LONGITUDINAL SEISMIC LOADS IN ACCORDANCE WITH SPECIFICATION SECTION 15097.
2. SEE TABLE 'C' FOR MAXIMUM SPACING. AND PIPE SIZES.
3. SEE TABLE 'D' FOR ACCEPTABLE PIPE HANGERS.
4. PROVIDE 1/16" THICK NEOPRENE ISOLATION BETWEEN COPPER PIPING AND HANGERS.
5. MATERIAL: ALL COMPONENTS OF SEISMIC BRACING SHALL BE FABRICATED OF TYPE 316 STAINLESS STEEL.

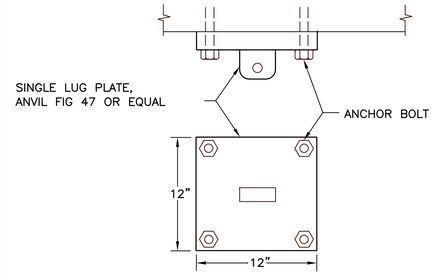


| MAXIMUM ALLOWABLE LOAD: | | | |
|---|---|---|---|
| PLATE THICKNESS | ROD SIZE | BOLT SIZE | LOAD |
| 3/4" | 1" | 3/4" | 4960 LBS |
| 1" | 1 1/4" | 7/8" | 8000 LBS |
| 1" | 1 1/2" | 1" | 11630 LBS |

ATTACH ROD TO TYPE 316 STAINLESS STEEL PLATE WITH FORGED TYPE 316 STAINLESS STEEL CLEVIS, ANVIL FIG 299 OR EQUAL

## DETAIL 4

NTS

FILE: 215786-00P007.dwg
DATE: Oct 07, 2015-4:28:52pm, rsnider

HDR Engineering, Inc.

| ISSUE | DATE | DESCRIPTION |
|---|---|---|
| A | JUNE 2015 | ISSUED FOR BID |

| | |
|---|---|
| PROJECT MANAGER | C. OLSON |
| | |
| DESIGNED | T. KONTONICKAS |
| DESIGNED | |
| CHECKED | C. OLSON |
| DRAWN | R. SNIDER |
| DATE | JUNE 30, 2015 |
| | |
| PROJECT NUMBER | 215786 |

REGISTERED PROFESSIONAL ENGINEER
THEODORE H. KONTONICKAS
NO. 29378
EXP. 06/30/17
MECHANICAL
STATE OF CALIFORNIA
06-30-15

CITY OF PINOLE CALIFORNIA 1903

PINOLE/HERCULES
WATER POLLUTION
CONTROL PLANT UPGRADE
CLIENT PN

**PROCESS**

**STANDARD DETAILS 7**

0 1" 2"

| FILENAME | |
|---|---|
| SCALE | NOTED |

SHEET **00P007**

NOTES:

1. MANHOLE IS CLASSIFIED AS A CLASS 1, DIV. 1 AREA. CONDUITS THAT ENTER MANHOLE FOR ULTRASONIC TRANSDUCER REQUIRE SEALANT FITTINGS. CABLE FOR TRANSDUCER CAN BE OPEN TO OUTSIDE ATMOSPHERE FROM MANHOLE TO TRANSMITTER AND CONDUIT ENTERING MANHOLE BE PACKED WITH PUTTY IN LIEU OF SEALANT FITTING.
2. LOCATE CENTERLINE OF SENSOR 36.3" UPSTREAM OF BEGINNING OF FLUME THROAT AT UPSTREAM SIDE OF FLUME, COORDINATE WITH FIBERGLASS GRATING.
3. SEE SPECIFICATION SECTION 13900.
4. SEE CIVIL GRADING AND PAVING PLANS FOR SURFACE FINISH ADJACENT TO PARSHALL FLUMES.
5. COORDINATE FINAL RIM ELEVATION WITH SITE GRADING AND PAVING PLANS.

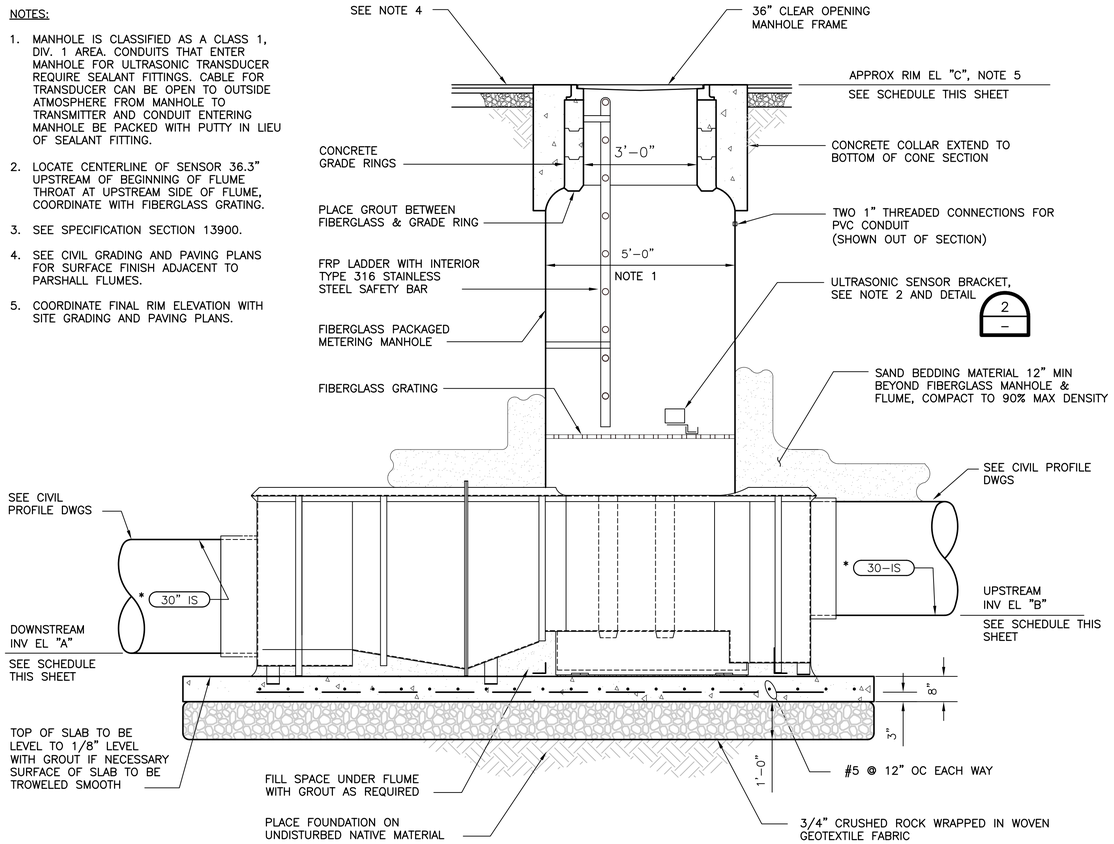


## SECTION A

NTS

| ELEVATION SCHEDULE | | | |
|---|---|---|---|
| FLUME | ELEVATION "A" | ELEVATION "B" | ELEVATION "C" |
| HERCULES INFLUENT SEWER | EL 99.21 | EL 99.71 | EL 108.92 |
| PINOLE INFLUENT SEWER | EL 97.54 | EL 98.04 | EL 108.40 |
| PLANT DRAIN | EL 98.34 | EL 98.44 | EL 109.21 |

* PLANT DRAIN FLUME TO BE 12" PARSHALL FLUME, NOT 18". DIMENSIONS FOR PLANT DRAIN FLUME WILL BE SLIGHTLY REDUCED PER MANUFACTURER SIZING. PIPE SIZES PER CIVIL DRAWINGS.

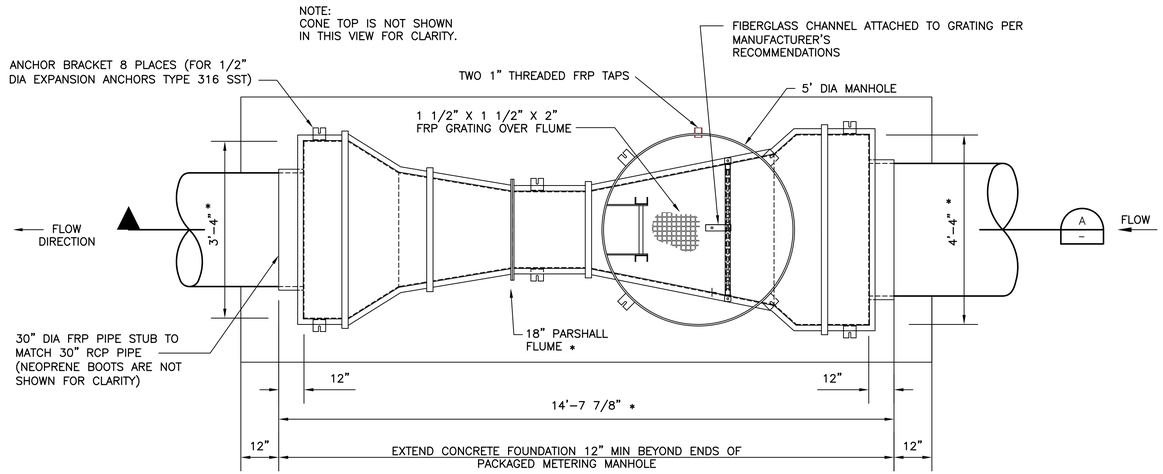


## PLAN

NTS

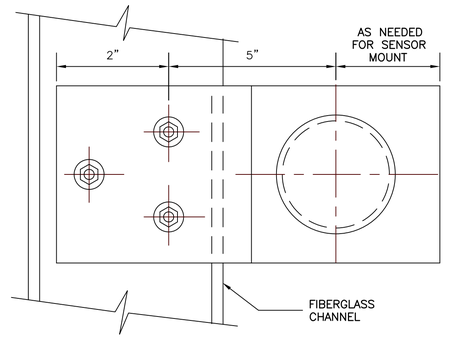


PLAN VIEW

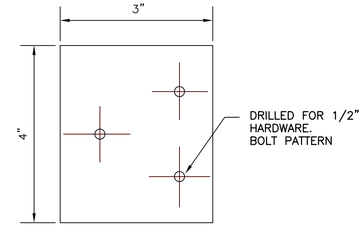


STIFFENER PLATE DETAIL

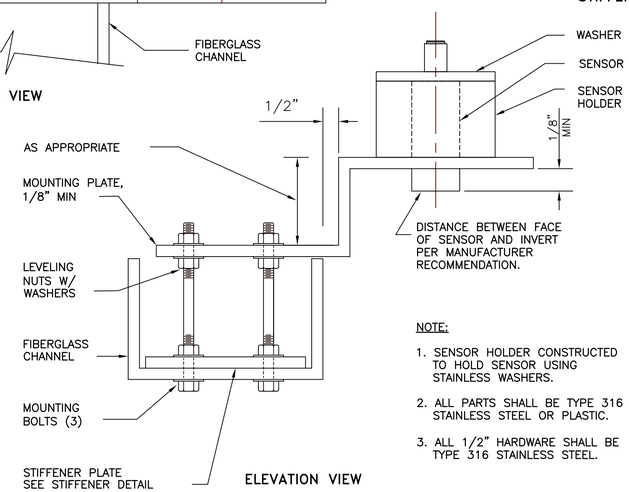


ELEVATION VIEW

NOTE:

1. SENSOR HOLDER CONSTRUCTED TO HOLD SENSOR USING STAINLESS WASHERS.
2. ALL PARTS SHALL BE TYPE 316 STAINLESS STEEL OR PLASTIC.
3. ALL 1/2" HARDWARE SHALL BE TYPE 316 STAINLESS STEEL.

## DETAIL 2

NTS

FILE: 215786-11P101.dwg
DATE: Oct 07, 2015-4:31:00am, renider

HDR Engineering, Inc.

| ISSUE | DATE | DESCRIPTION |
|---|---|---|
| A | JUNE 2015 | ISSUED FOR BID |

| | |
|---|---|
| PROJECT MANAGER | C. OLSON |
| DESIGNED | R. NATOLI |
| DESIGNED | |
| CHECKED | C. OLSON |
| DRAWN | P. VAN MEURS |
| DATE | JUNE 30, 2015 |
| PROJECT NUMBER | 215786 |

REGISTERED PROFESSIONAL ENGINEER ROBERT G. NATOLI NO. 78271 EXP. 09/30/15 CIVIL STATE OF CALIFORNIA 06-30-15

CITY OF PINOLE CALIFORNIA 1903

PINOLE/HERCULES WATER POLLUTION CONTROL PLANT UPGRADE CLIENT PN

**PROCESS INFLUENT SEWER FLUMES FLOW MEASUREMENT SECTIONS & DETAILS**

0 1" 2"

| | |
|---|---|
| FILENAME | 215786-11P101 |
| SCALE | AS NOTED |

SHEET 11P101

NOTE:

1. PVC LINER REQUIRED FOR THIS STRUCTURES. SEE NOTE 10 ON SHEET 12S101.

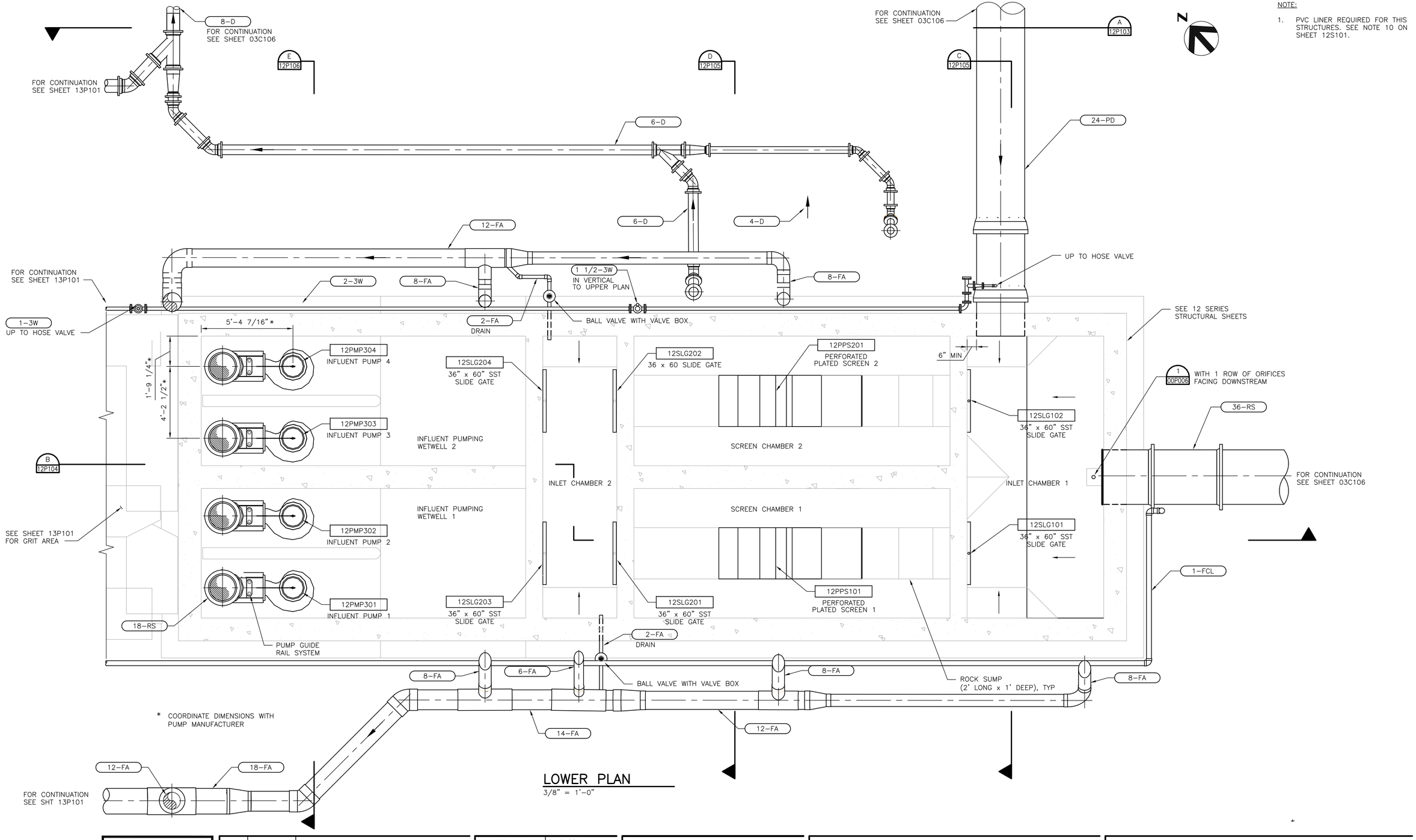


## LOWER PLAN

3/8" = 1'-0"

| ISSUE | DATE | DESCRIPTION |
|---|---|---|
| A | JUNE 2015 | ISSUED FOR BID |

| | |
|---|---|
| PROJECT MANAGER | C. OLSON |
| DESIGNED | R. NATOLI |
| DESIGNED | |
| CHECKED | C. OLSON |
| DRAWN | B. DOWN |
| DATE | JUNE 30, 2015 |
| PROJECT NUMBER | 215786 |

REGISTERED PROFESSIONAL ENGINEER ROBERT G. NATOLI NO. 78271 EXP. 09/30/15 CIVIL STATE OF CALIFORNIA

PINOLE/HERCULES WATER POLLUTION CONTROL PLANT UPGRADE CLIENT PN

**PROCESS**

**HEADWORKS LOWER PLAN**

| | |
|---|---|
| FILENAME | 215786-12P101 |
| SCALE | AS NOTED |

SHEET **12P101**

FILE: 215786-12P101.dwg
DATE: Oct 07, 2015-4:32:13am, rsnider

NOTE:

1. SEE SHEET 02C102 FOR PAVING AND GRADING AROUND HEADWORKS STRUCTURES.

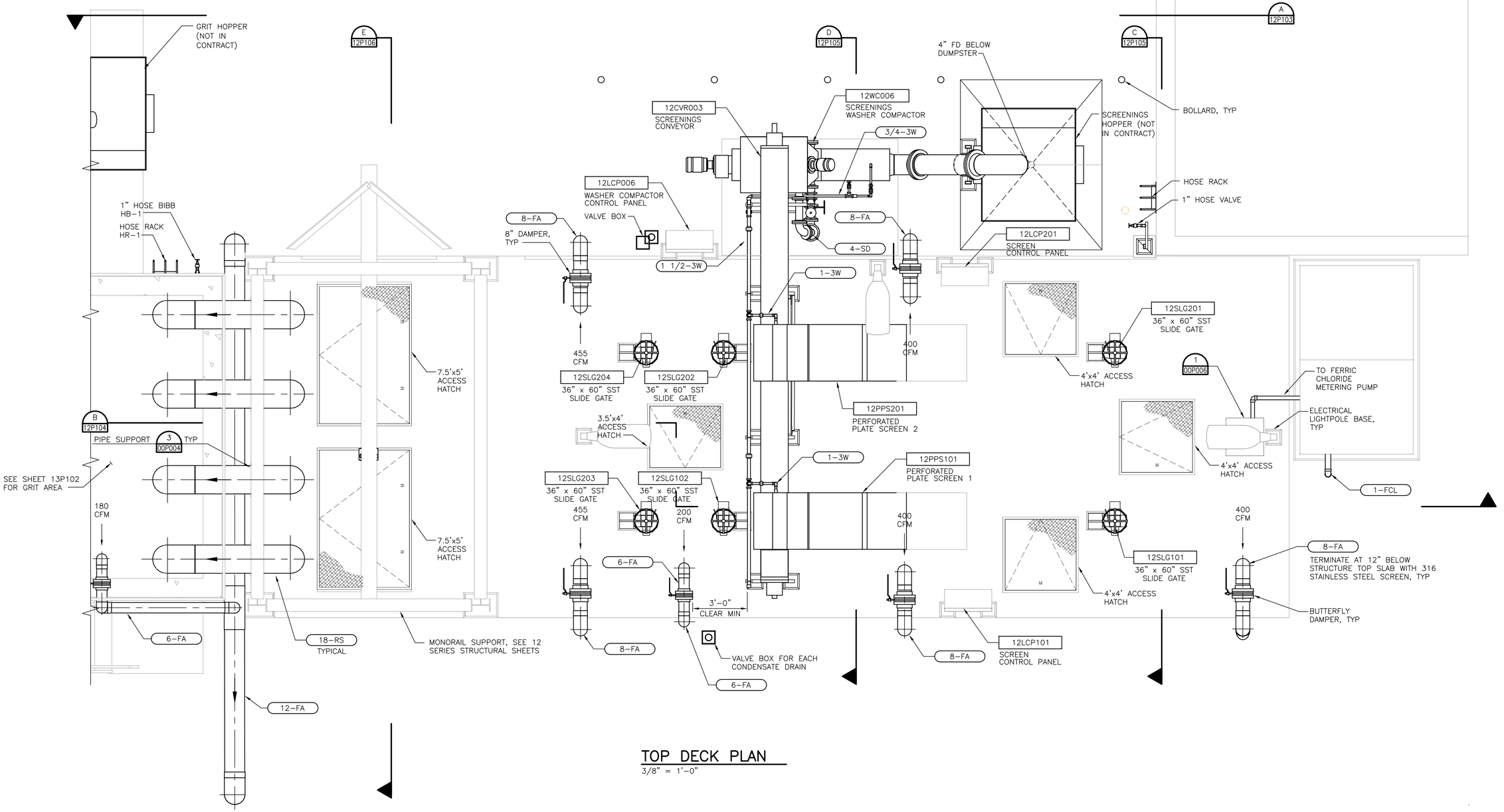


## TOP DECK PLAN

3/8" = 1'-0"

FILE: 215786-12P102.dwg
DATE: Oct 07, 2015-4:32:22pm, rsnider

HDR Engineering, Inc.

| ISSUE | DATE | DESCRIPTION |
|---|---|---|
| A | JUNE 2015 | ISSUED FOR BID |

| | |
|---|---|
| PROJECT MANAGER | C. OLSON |
| DESIGNED | R. NATOLI |
| DESIGNED | |
| CHECKED | C. OLSON |
| DRAWN | B. DOWN |
| DATE | JUNE 30, 2015 |
| PROJECT NUMBER | 215786 |

REGISTERED PROFESSIONAL ENGINEER ROBERT G. NATOLI NO. 78271 EXP. 09/30/15 CIVIL STATE OF CALIFORNIA 06-30-15

CITY OF PINOLE CALIFORNIA 1903

PINOLE/HERCULES WATER POLLUTION CONTROL PLANT UPGRADE CLIENT PN

**PROCESS**

**HEADWORKS TOP DECK PLAN**

0 1" 2"

| | |
|---|---|
| FILENAME | 215786-12P102 |
| SCALE | AS NOTED |

SHEET **12P102**

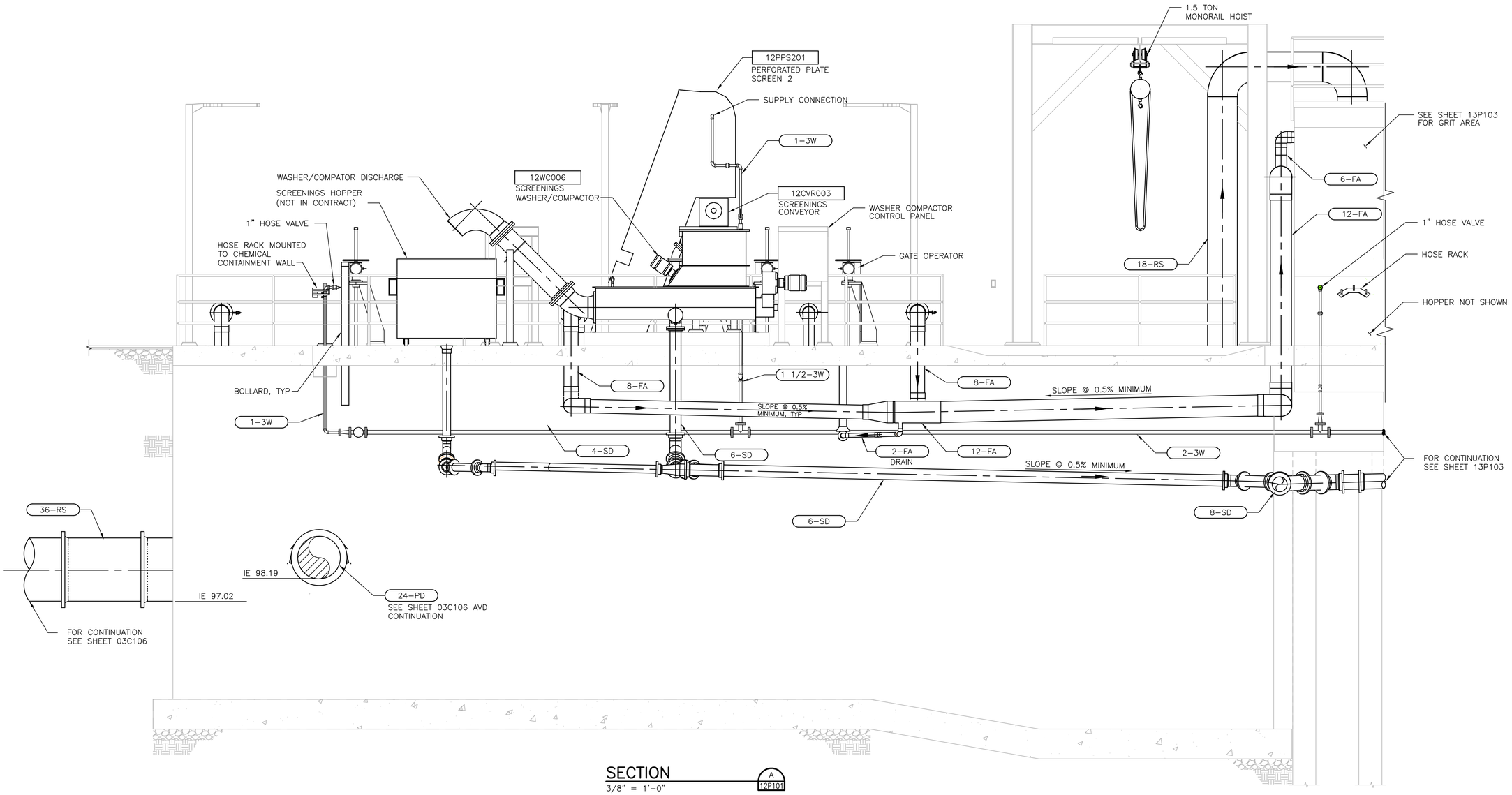


SECTION
3/8" = 1'-0"
A
12P101

FILE: 215786-12P103.dwg
DATE: Oct 07, 2015-4:32:45pm, rsnider

HDR Engineering, Inc.

| ISSUE | DATE | DESCRIPTION |
|---|---|---|
| A | JUNE 2015 | ISSUED FOR BID |

| | |
|---|---|
| PROJECT MANAGER | C. OLSON |
| DESIGNED | R. NATOLI |
| DESIGNED | |
| CHECKED | C. OLSON |
| DRAWN | B. DOWN |
| DATE | JUNE 30, 2015 |
| PROJECT NUMBER | 215786 |

REGISTERED PROFESSIONAL ENGINEER
ROBERT G. NATOLI
NO. 78271
EXP. 09/30/15
CIVIL
STATE OF CALIFORNIA
06-30-15

CITY OF PINOLE CALIFORNIA 1903

PINOLE/HERCULES
WATER POLLUTION
CONTROL PLANT UPGRADE
CLIENT PN

**PROCESS**

**HEADWORKS**
**SECTION 1**

0 1" 2"

| | |
|---|---|
| FILENAME | 215786-12P103 |
| SCALE | AS NOTED |

SHEET
**12P103**

NOTES:

1. COORDINATE PUMP EQUIPMENT PAD HEIGHT WITH PUMP MANUFACTURER.
2. 18–INCH RS BETWEEN INFLUENT PUMPS AND GRIT REMOVAL SHALL BE STEEL. DIP IS NOT AN OPTION FOR THESE FOUR PIPES.

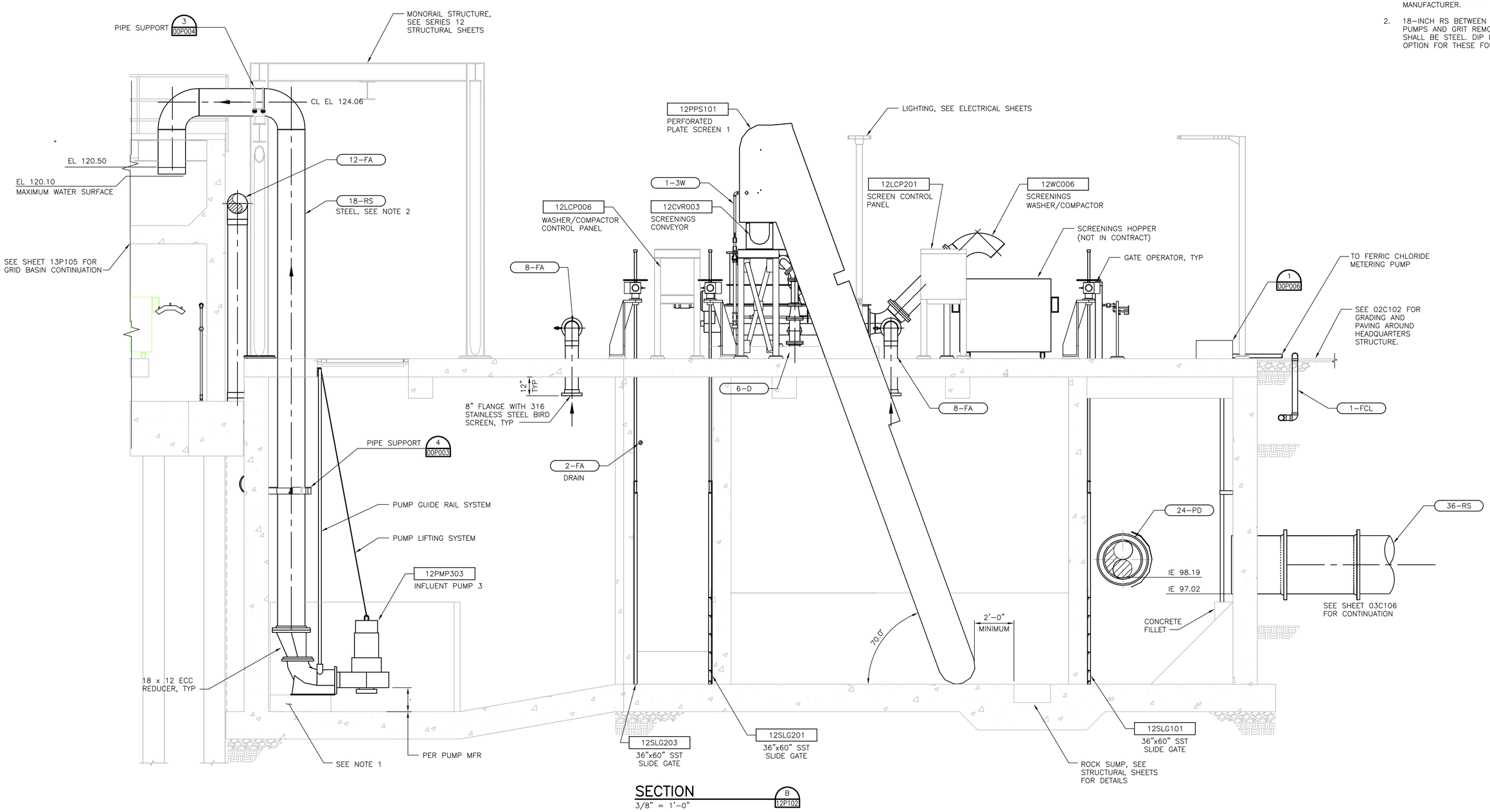


SECTION
3/8" = 1'–0"
B 12P102

FILE: 215786–12P104.dwg
DATE: Oct 07, 2015–4:33:14am, rsnider

HDR Engineering, Inc.

| ISSUE | DATE | DESCRIPTION |
|---|---|---|
| A | JUNE 2015 | ISSUED FOR BID |

| | |
|---|---|
| PROJECT MANAGER | C. OLSON |
| DESIGNED | R. NATOLI |
| DESIGNED | |
| CHECKED | C. OLSON |
| DRAWN | B. DOWN |
| DATE | JUNE 30, 2015 |
| PROJECT NUMBER | 215786 |

REGISTERED PROFESSIONAL ENGINEER ROBERT G. NATOLI NO. 78271 EXP. 09/30/15 CIVIL STATE OF CALIFORNIA 06-30-15

CITY OF PINOLE CALIFORNIA 1903

PINOLE/HERCULES WATER POLLUTION CONTROL PLANT UPGRADE CLIENT PN

**PROCESS**

**HEADWORKS SECTION 2**

0 1" 2"

| FILENAME | 215786–12P104 |
|---|---|
| SCALE | AS NOTED |

SHEET **12P104**

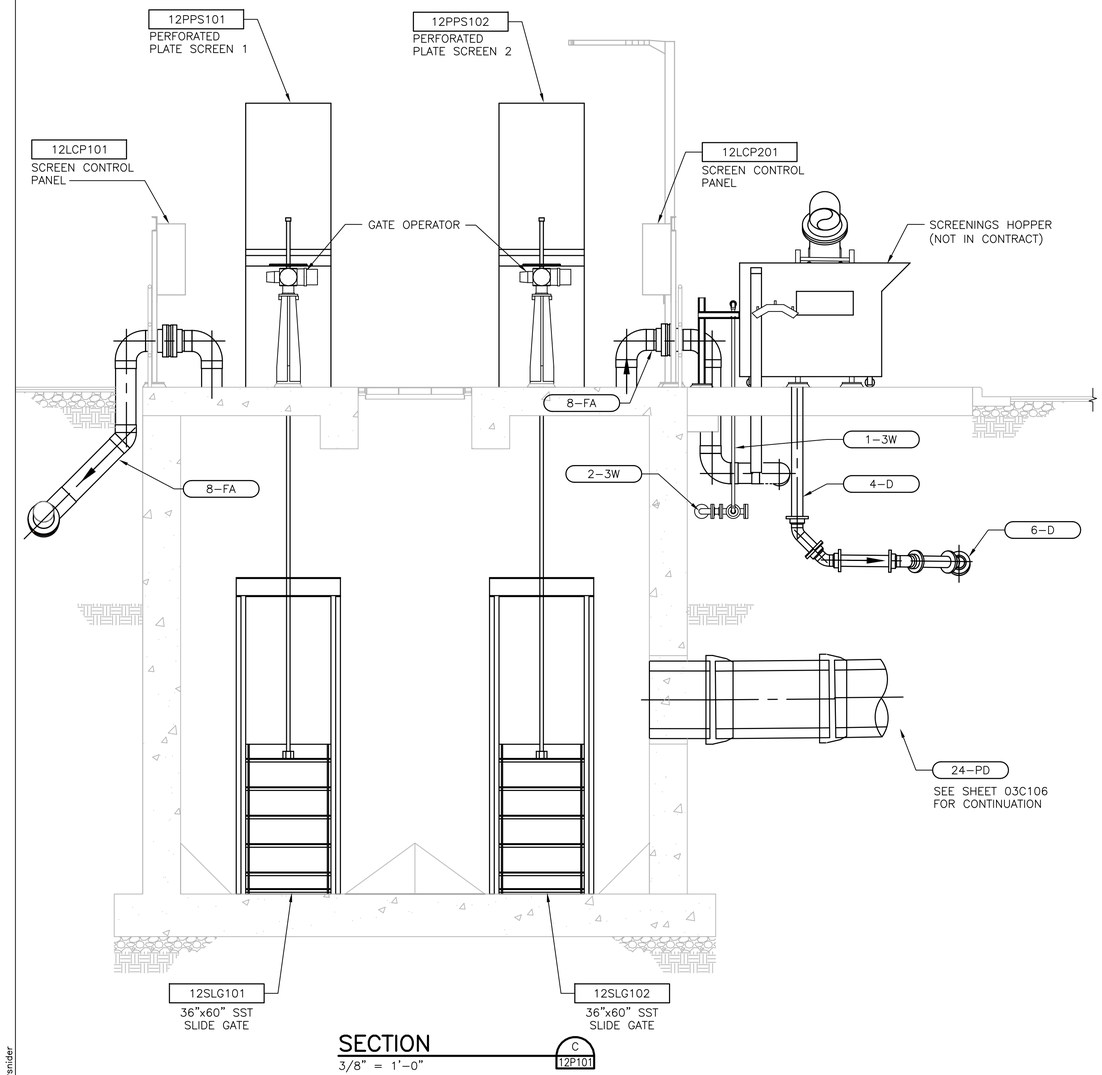


SECTION
3/8" = 1'-0"
C
12P101

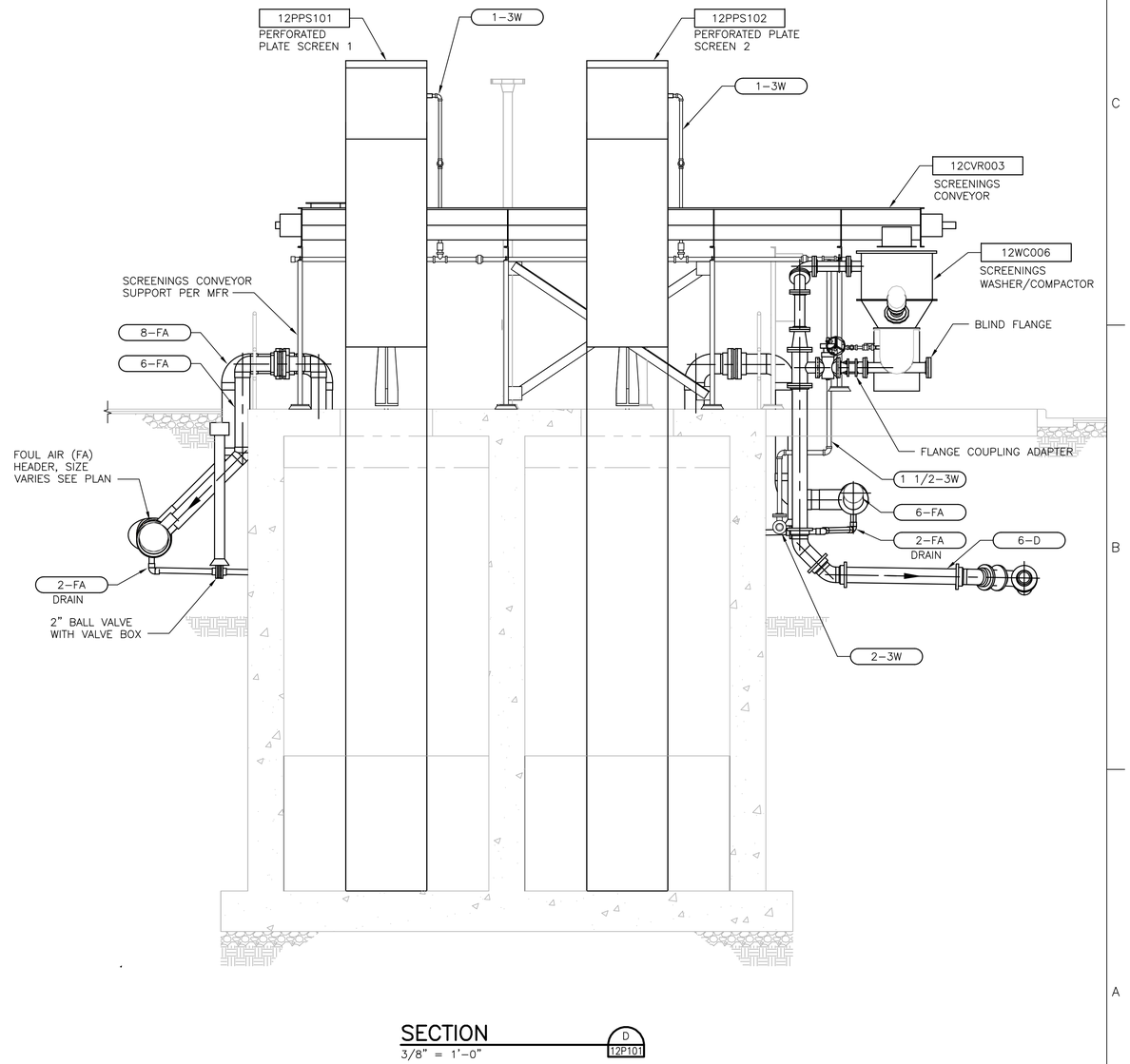


SECTION
3/8" = 1'-0"
D
12P101

FILE: 215786-12P105.dwg
DATE: Oct 07, 2015-4:33:36am, rsnider

HDR Engineering, Inc.

| ISSUE | DATE | DESCRIPTION |
|---|---|---|
| A | JUNE 2015 | ISSUED FOR BID |

| | |
|---|---|
| PROJECT MANAGER | C. OLSON |
| | |
| DESIGNED | R. NATOLI |
| DESIGNED | |
| CHECKED | C. OLSON |
| DRAWN | B. DOWN |
| DATE | JUNE 30, 2015 |
| | |
| PROJECT NUMBER | 215786 |

REGISTERED PROFESSIONAL ENGINEER
ROBERT G. NATOLI
NO. 78271
EXP. 09/30/15
CIVIL
STATE OF CALIFORNIA
06-30-15

CITY OF PINOLE CALIFORNIA 1903

PINOLE/HERCULES
WATER POLLUTION
CONTROL PLANT UPGRADE
CLIENT PN

**PROCESS**

**HEADWORKS SECTIONS 3**

0 1" 2"

| | |
|---|---|
| FILENAME | 215786-12P105 |
| SCALE | AS NOTED |

SHEET
**12P105**

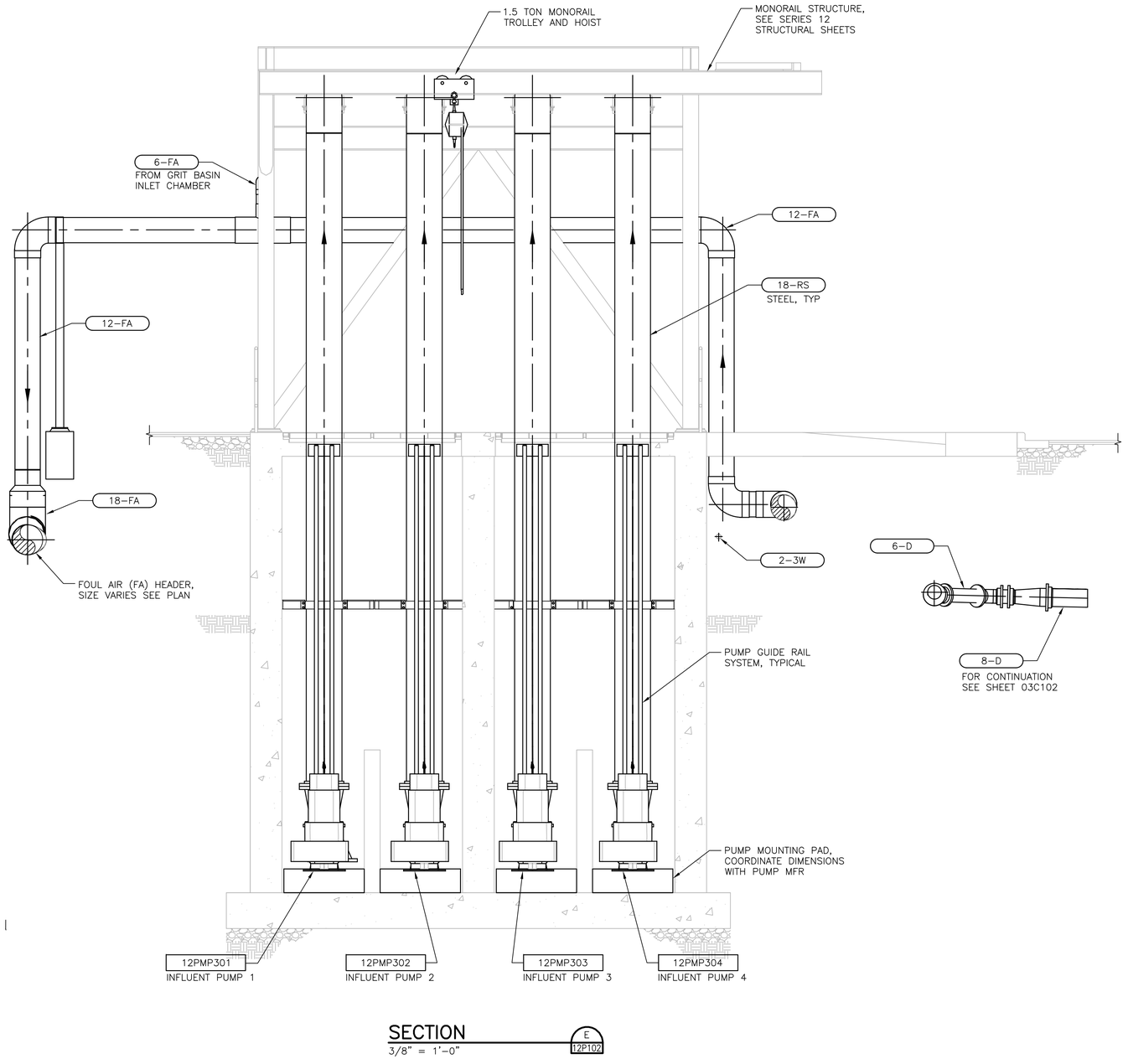


SECTION
3/8" = 1'–0"
E 12P102




FOR CONTINUATION SEE SHEET 03C102

FILE: 215786–12P106.dwg
DATE: Oct 07, 2015–4:33:59pm, rsnider

HDR
HDR Engineering, Inc.

| ISSUE | DATE | DESCRIPTION |
|---|---|---|
| A | JUNE 2015 | ISSUED FOR BID |

| | |
|---|---|
| PROJECT MANAGER | C. OLSON |
| DESIGNED | R. NATOLI |
| DESIGNED | |
| CHECKED | C. OLSON |
| DRAWN | B. DOWN |
| DATE | JUNE 30, 2015 |
| PROJECT NUMBER | 215786 |

REGISTERED PROFESSIONAL ENGINEER
ROBERT G. NATOLI
NO. 78271
EXP. 09/30/15
CIVIL
STATE OF CALIFORNIA
06-30-15

CITY OF PINOLE CALIFORNIA 1903

PINOLE/HERCULES
WATER POLLUTION
CONTROL PLANT UPGRADE
CLIENT PN

**PROCESS**

**HEADWORKS SECTION 4**

0 1" 2"

| | |
|---|---|
| FILENAME | 215786–12P106 |
| SCALE | AS NOTED |

SHEET
**12P106**

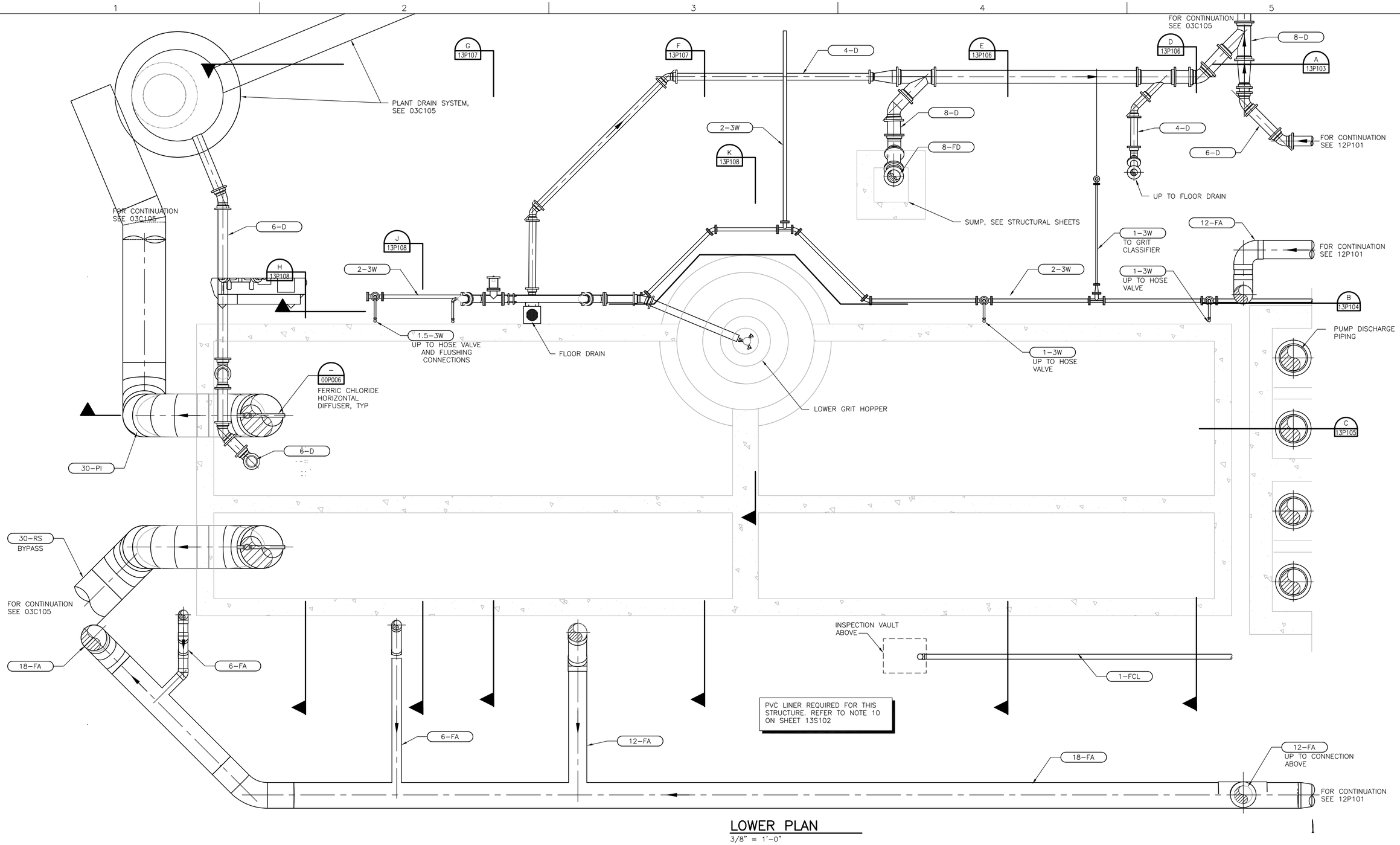


## LOWER PLAN

3/8" = 1'–0"

FILE: 215786–13P101.dwg
DATE: Oct 07, 2015–4:34:30pm, rsnider

HDR Engineering, Inc.

| ISSUE | DATE | DESCRIPTION |
|---|---|---|
| A | JUNE 2015 | ISSUED FOR BID |

| | |
|---|---|
| PROJECT MANAGER | C. OLSON |
| DESIGNED | R. NATOLI |
| DESIGNED | M. RAMANATHAN |
| CHECKED | C. OLSON |
| DRAWN | B. DOWN |
| DATE | JUNE 30, 2015 |
| PROJECT NUMBER | 215786 |

REGISTERED PROFESSIONAL ENGINEER
ROBERT G. NATOLI
NO. 78271
EXP. 09/30/15
CIVIL
STATE OF CALIFORNIA
06-30-15

CITY OF PINOLE CALIFORNIA 1903

PINOLE/HERCULES
WATER POLLUTION
CONTROL PLANT UPGRADE
CLIENT PN

**PROCESS**

**GRIT BASIN
LOWER PLAN**

0 1" 2"

| | |
|---|---|
| FILENAME | 215786–13P101 |
| SCALE | AS NOTED |

SHEET
**13P101**

NOTE:

1. SEE SERIES 13 STRUCTURAL SHEETS FOR CELLULAR CONCRETE FILL IN CHANNELS.
2. COORDINATE 3W CONNECTIONS WITH EQUIPMENT MFR AND INSTRUMENTATION DRAWINGS.

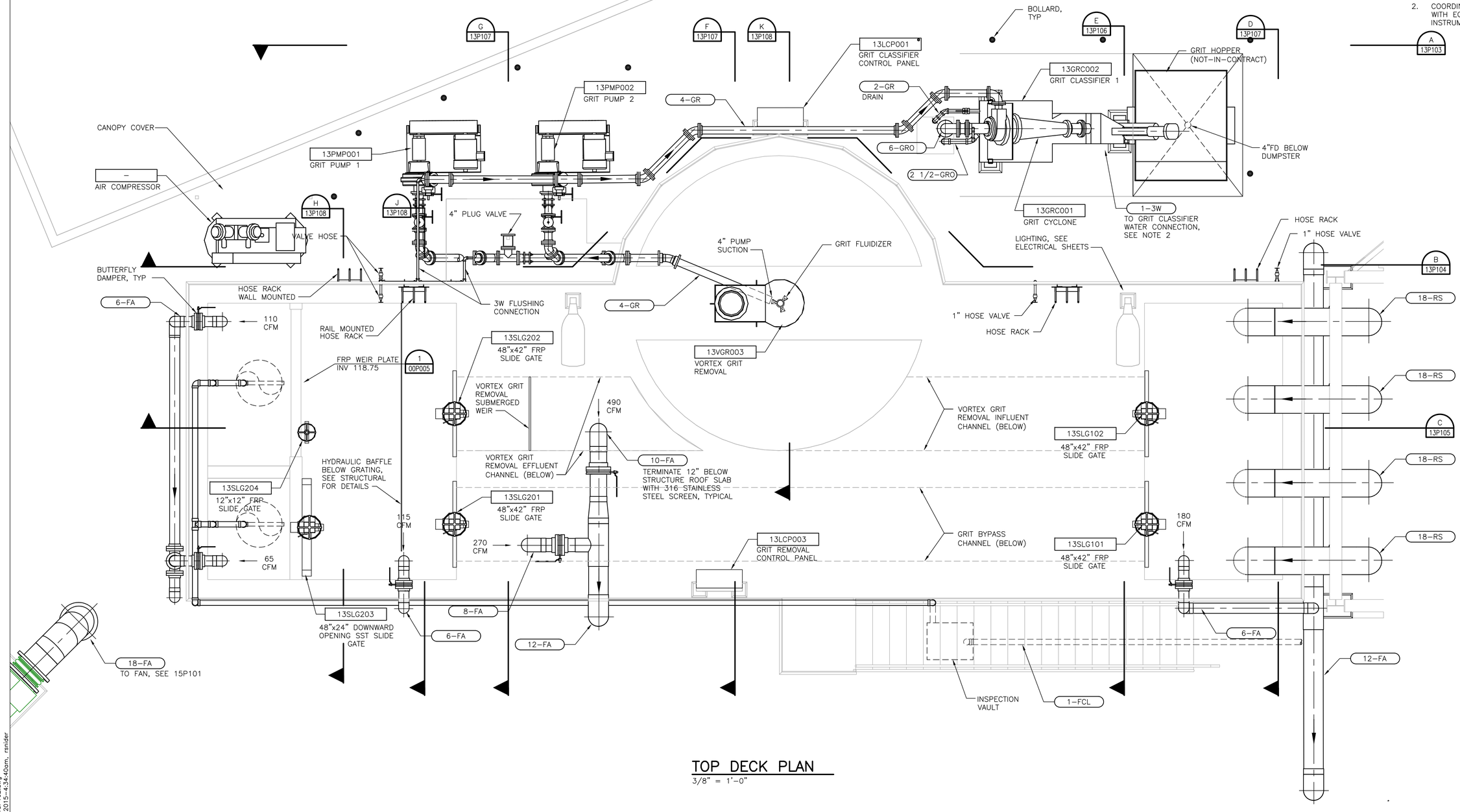


## TOP DECK PLAN

3/8" = 1'-0"

FILE: 215786-13P102.dwg
DATE: Oct 07, 2015-4:34:40am, rsnider

HDR Engineering, Inc.

| ISSUE | DATE | DESCRIPTION |
|---|---|---|
| A | JUNE 2015 | ISSUED FOR BID |

| | |
|---|---|
| PROJECT MANAGER | C. OLSON |
| DESIGNED | R. NATOLI |
| DESIGNED | M. RAMANATHAN |
| CHECKED | C. OLSON |
| DRAWN | B. DOWN |
| DATE | JUNE 30, 2015 |
| PROJECT NUMBER | 215786 |

REGISTERED PROFESSIONAL ENGINEER ROBERT G. NATOLI NO. 78271 EXP. 09/30/15 CIVIL STATE OF CALIFORNIA 06-30-15

CITY OF PINOLE CALIFORNIA 1903

PINOLE/HERCULES WATER POLLUTION CONTROL PLANT UPGRADE
CLIENT PN

**PROCESS**

**GRIT BASIN TOP DECK PLAN**

0 1" 2"

| | |
|---|---|
| FILENAME | 215786-13P102 |
| SCALE | AS NOTED |

SHEET **13P102**

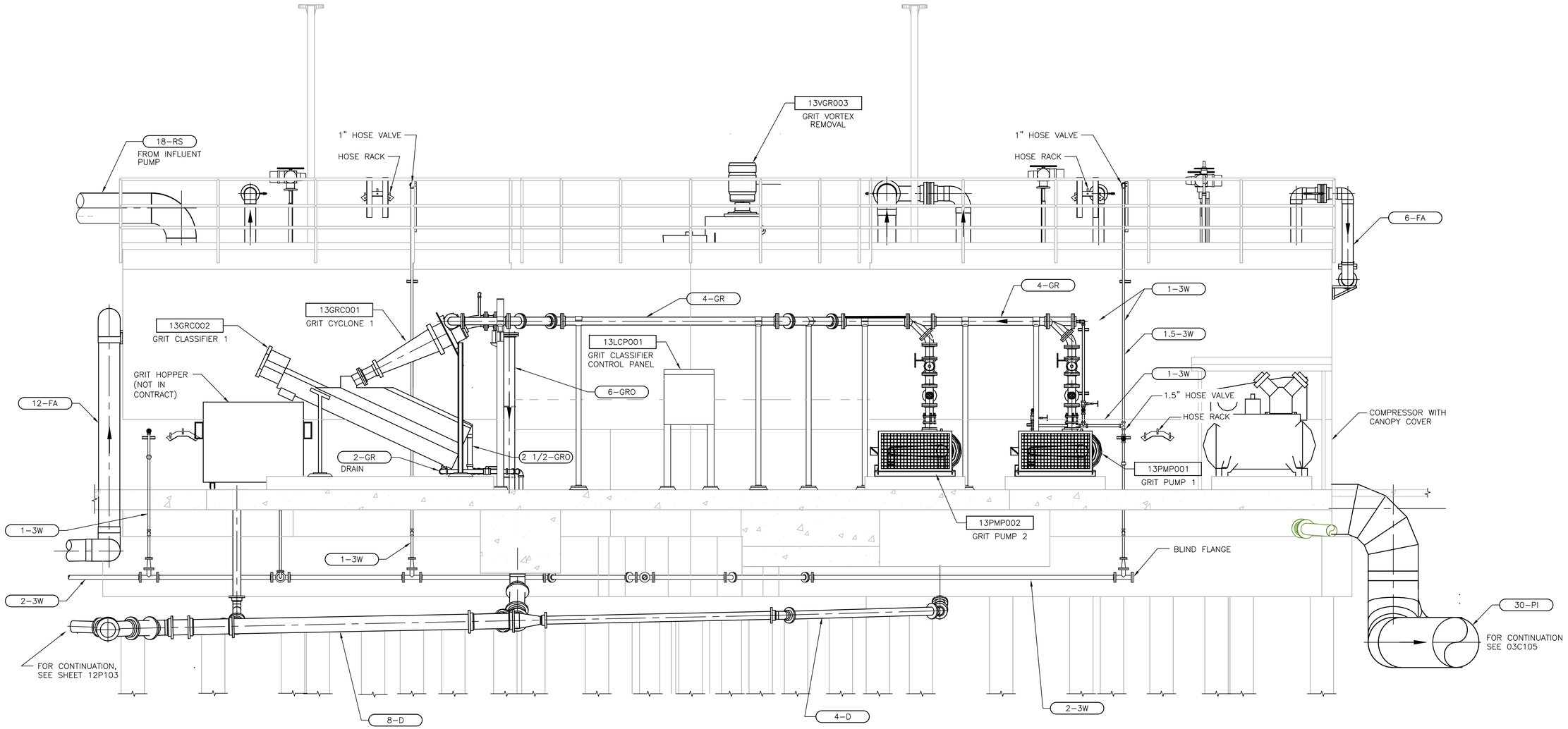


SECTION
3/8" = 1'-0"
A 13P101

FILE: 215786-13P103.dwg
DATE: Oct 07, 2015-4:34:53am, rsnider

HDR Engineering, Inc.

| ISSUE | DATE | DESCRIPTION |
|---|---|---|
| A | JUNE 2015 | ISSUED FOR BID |

| | |
|---|---|
| PROJECT MANAGER | C. OLSON |
| DESIGNED | R. NATOLI |
| DESIGNED | M. RAMANATHAN |
| CHECKED | C. OLSON |
| DRAWN | B. DOWN |
| DATE | JUNE 30, 2015 |
| PROJECT NUMBER | 215786 |

REGISTERED PROFESSIONAL ENGINEER
ROBERT G. NATOLI
NO. 78271
EXP. 09/30/15
CIVIL
STATE OF CALIFORNIA
06-30-15

CITY OF PINOLE CALIFORNIA 1903

PINOLE/HERCULES
WATER POLLUTION
CONTROL PLANT UPGRADE
CLIENT PN

**PROCESS**

**GRIT BASIN SECTION 1**

0 1" 2"

| | |
|---|---|
| FILENAME | 215786-13P103 |
| SCALE | AS NOTED |

SHEET **13P103**

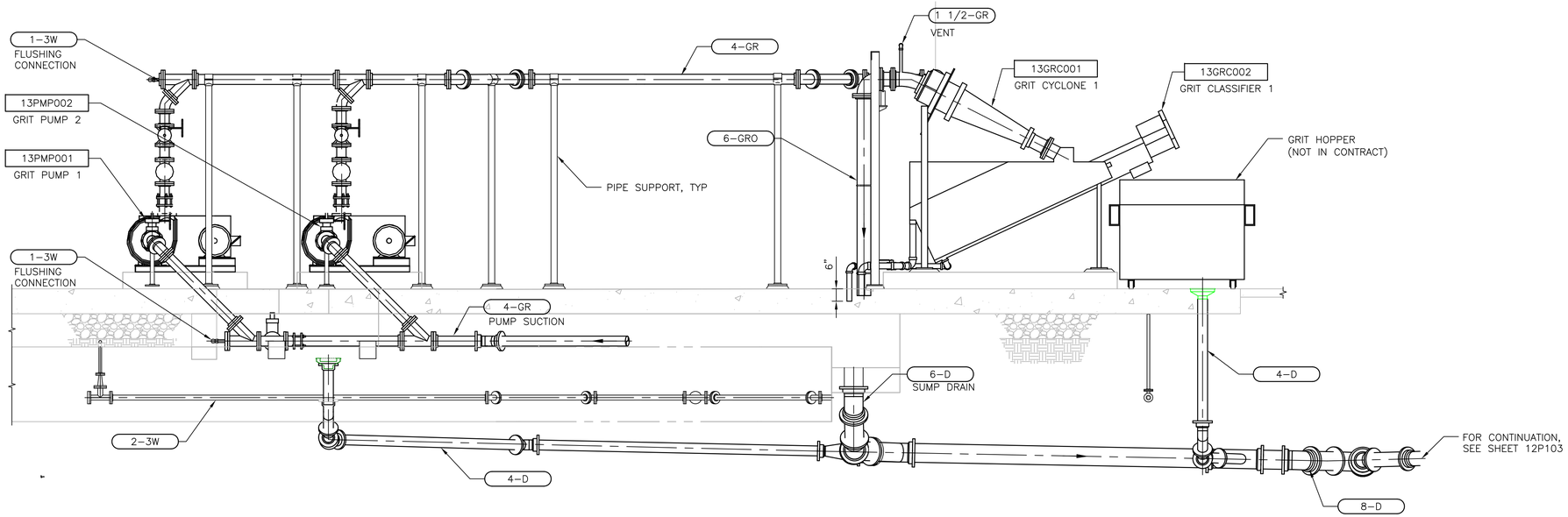


SECTION
3/8" = 1'–0"

B
13P101

FILE: 215786–13P104.dwg
DATE: Oct 07, 2015–4:35:05am, rsnider

HDR Engineering, Inc.

| ISSUE | DATE | DESCRIPTION |
|---|---|---|
| | | |
| | | |
| | | |
| | | |
| | | |
| | | |
| A | JUNE 2015 | ISSUED FOR BID |

| | |
|---|---|
| PROJECT MANAGER | C. OLSON |
| | |
| DESIGNED | R. NATOLI |
| DESIGNED | M. RAMANATHAN |
| CHECKED | C. OLSON |
| DRAWN | B. DOWN |
| DATE | JUNE 30, 2015 |
| | |
| PROJECT NUMBER | 215786 |

REGISTERED PROFESSIONAL ENGINEER
ROBERT G. NATOLI
NO. 78271
EXP. 09/30/15
CIVIL
STATE OF CALIFORNIA
06-30-15

CITY OF PINOLE CALIFORNIA 1903

PINOLE/HERCULES
WATER POLLUTION
CONTROL PLANT UPGRADE
CLIENT PN

**PROCESS**

**GRIT BASIN**
**SECTION 2**

0 1" 2"

| | |
|---|---|
| FILENAME | 215786–13P104 |
| SCALE | AS NOTED |

SHEET
**13P104**

NOTE:

1. INSTALL VORTEX GRIT SUBMERGED WEIR PER MANUFACTURER RECOMMENDATIONS.
2. SEE SPECIFICATION SECTION 11153 FOR FRP HYDRAULIC BAFFLE.

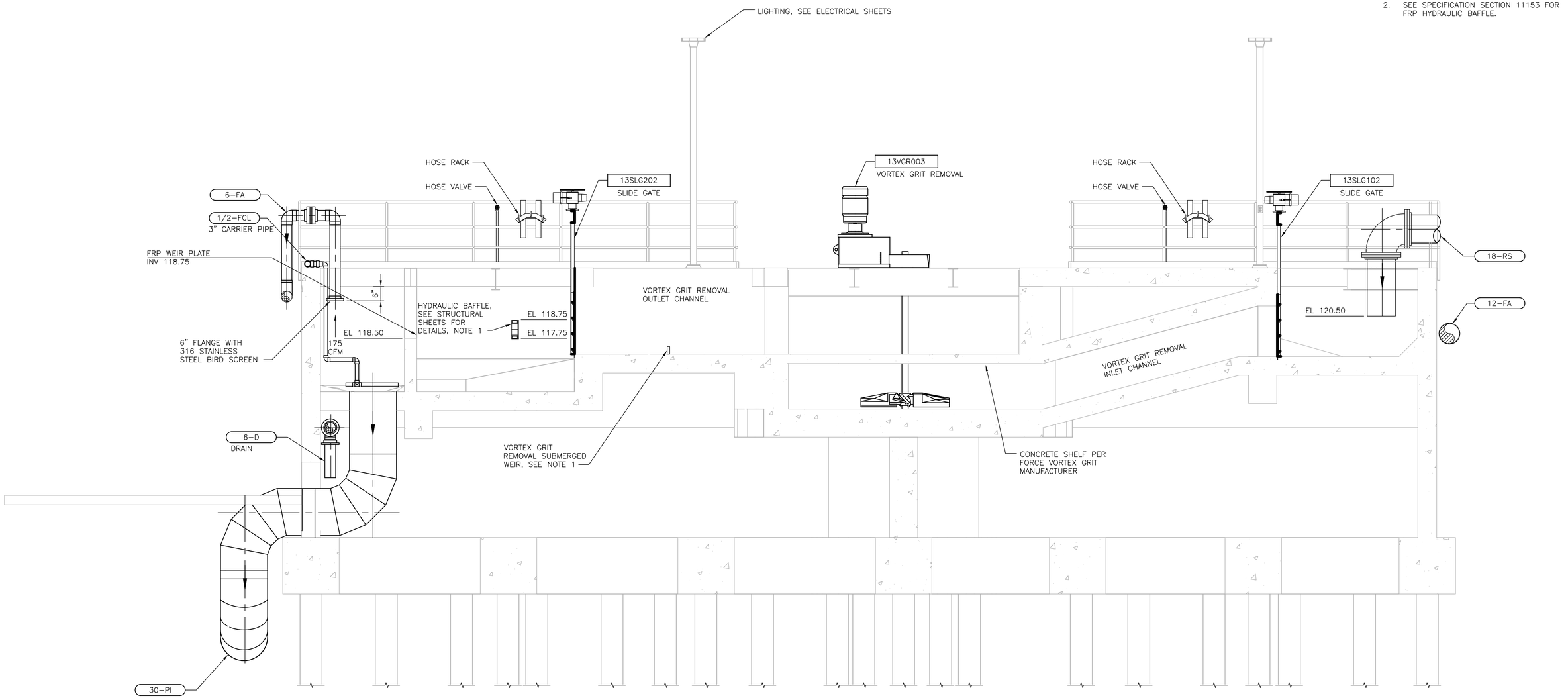


## SECTION

3/8" = 1'-0"

C 13P101

FILE: 215786-13P105.dwg
DATE: Oct 07, 2015-4:35:16pm, rsnider

HDR Engineering, Inc.

| ISSUE | DATE | DESCRIPTION |
|---|---|---|
| A | JUNE 2015 | ISSUED FOR BID |

| | |
|---|---|
| PROJECT MANAGER | C. OLSON |
| DESIGNED | M. RAMANATHAN |
| DESIGNED | |
| CHECKED | C. OLSON |
| DRAWN | B. DOWN |
| DATE | JUNE 30, 2015 |
| PROJECT NUMBER | 215786 |

REGISTERED PROFESSIONAL ENGINEER
ROBERT G. NATOLI
NO. 78271
EXP. 09/30/15
CIVIL
STATE OF CALIFORNIA
06-30-15

CITY OF PINOLE CALIFORNIA 1903

PINOLE/HERCULES
WATER POLLUTION
CONTROL PLANT UPGRADE
CLIENT PN

**PROCESS**

**GRIT BASIN SECTION 3**

0 1" 2"

| | |
|---|---|
| FILENAME | 215786-13P105 |
| SCALE | AS NOTED |

SHEET **13P105**

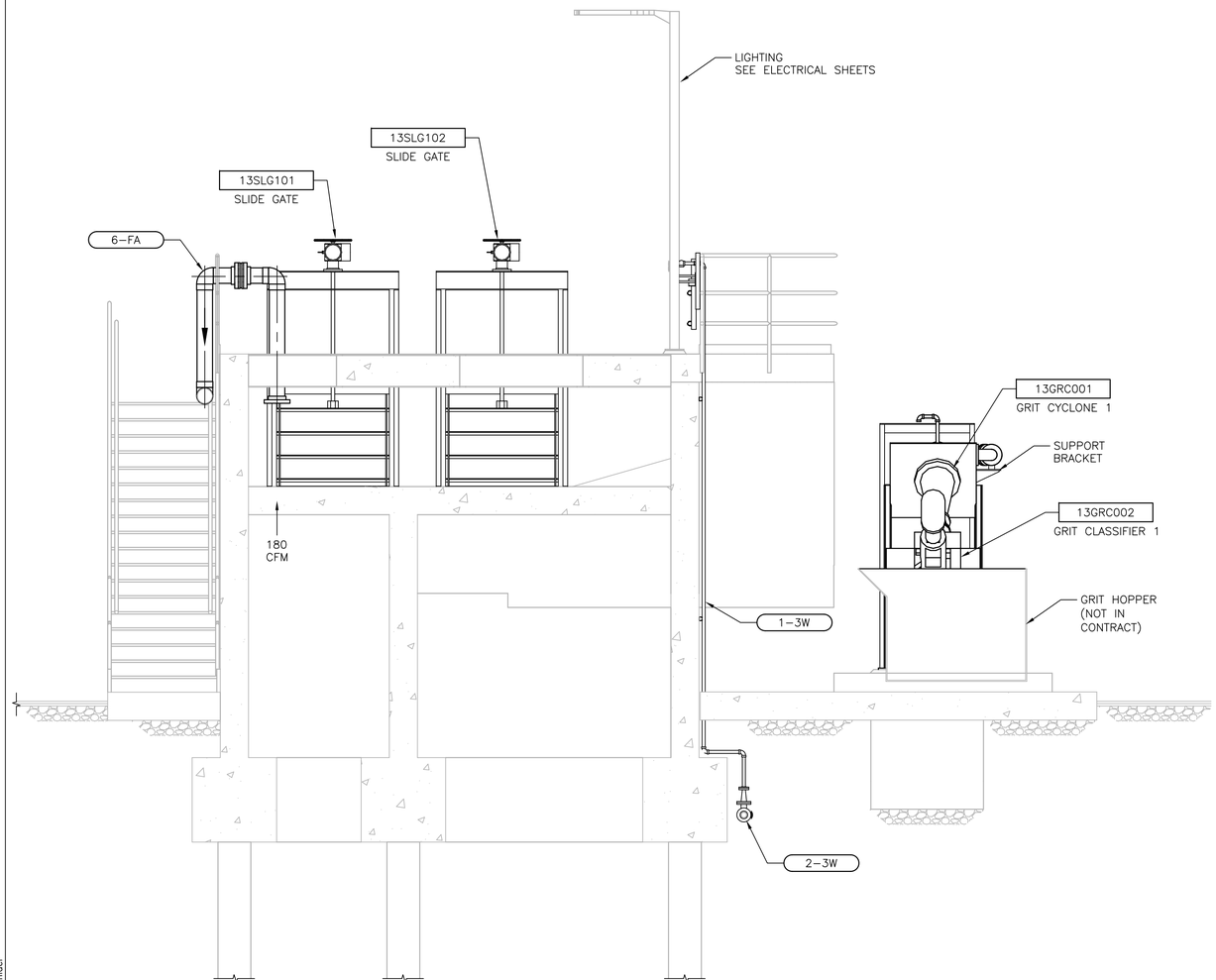


SECTION
3/8" = 1'-0"
D
13P101

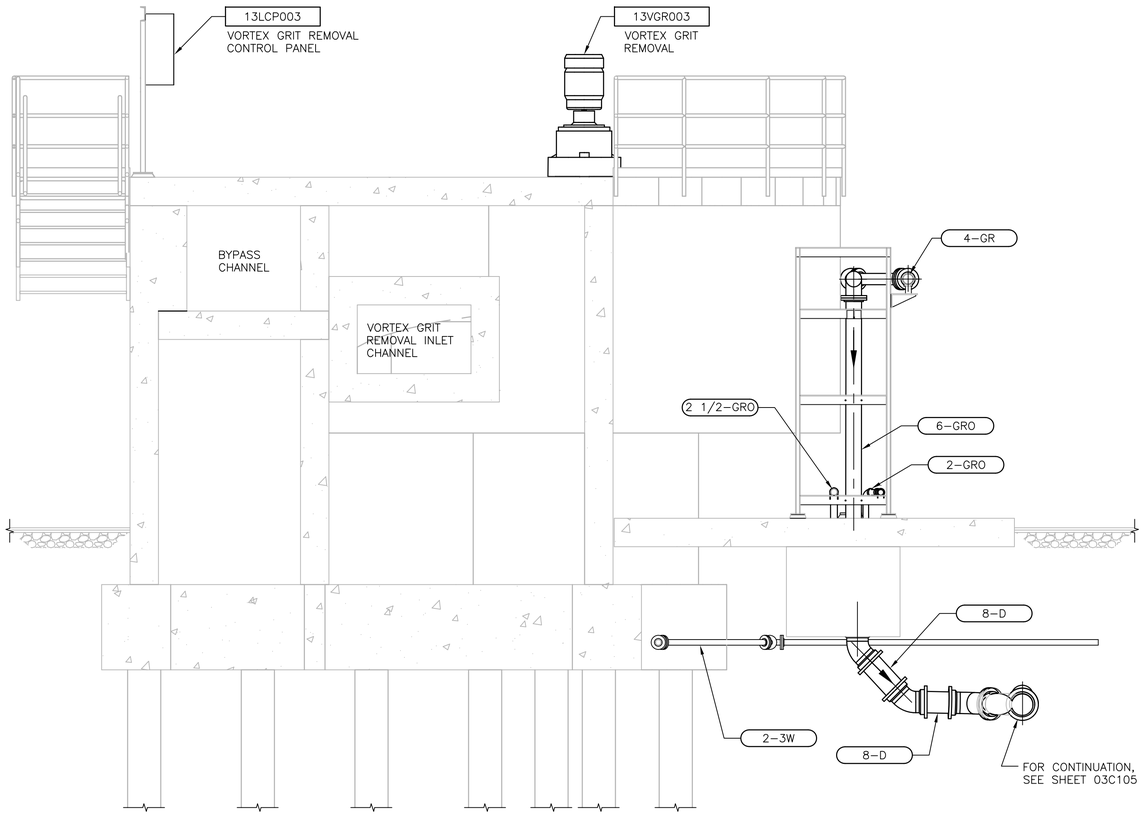


SECTION
3/8" = 1'-0"
E
13P101

FILE: 215786-13P106.dwg
DATE: Oct 07, 2015-4:35:30pm, rsnider

HDR Engineering, Inc.

| ISSUE | DATE | DESCRIPTION |
|---|---|---|
| A | JUNE 2015 | ISSUED FOR BID |

| | |
|---|---|
| PROJECT MANAGER | C. OLSON |
| DESIGNED | R. NATOLI |
| DESIGNED | M. RAMANATHAN |
| CHECKED | C. OLSON |
| DRAWN | B. DOWN |
| DATE | JUNE 30, 2015 |
| PROJECT NUMBER | 215786 |

REGISTERED PROFESSIONAL ENGINEER
ROBERT G. NATOLI
NO. 78271
EXP. 09/30/15
CIVIL
STATE OF CALIFORNIA
06-30-15

CITY OF PINOLE CALIFORNIA 1903

PINOLE/HERCULES
WATER POLLUTION
CONTROL PLANT UPGRADE
CLIENT PN

**PROCESS**

**GRIT BASIN SECTIONS 4**

0 1" 2"

| | |
|---|---|
| FILENAME | 215786-13P106 |
| SCALE | AS NOTED |

SHEET
**13P106**

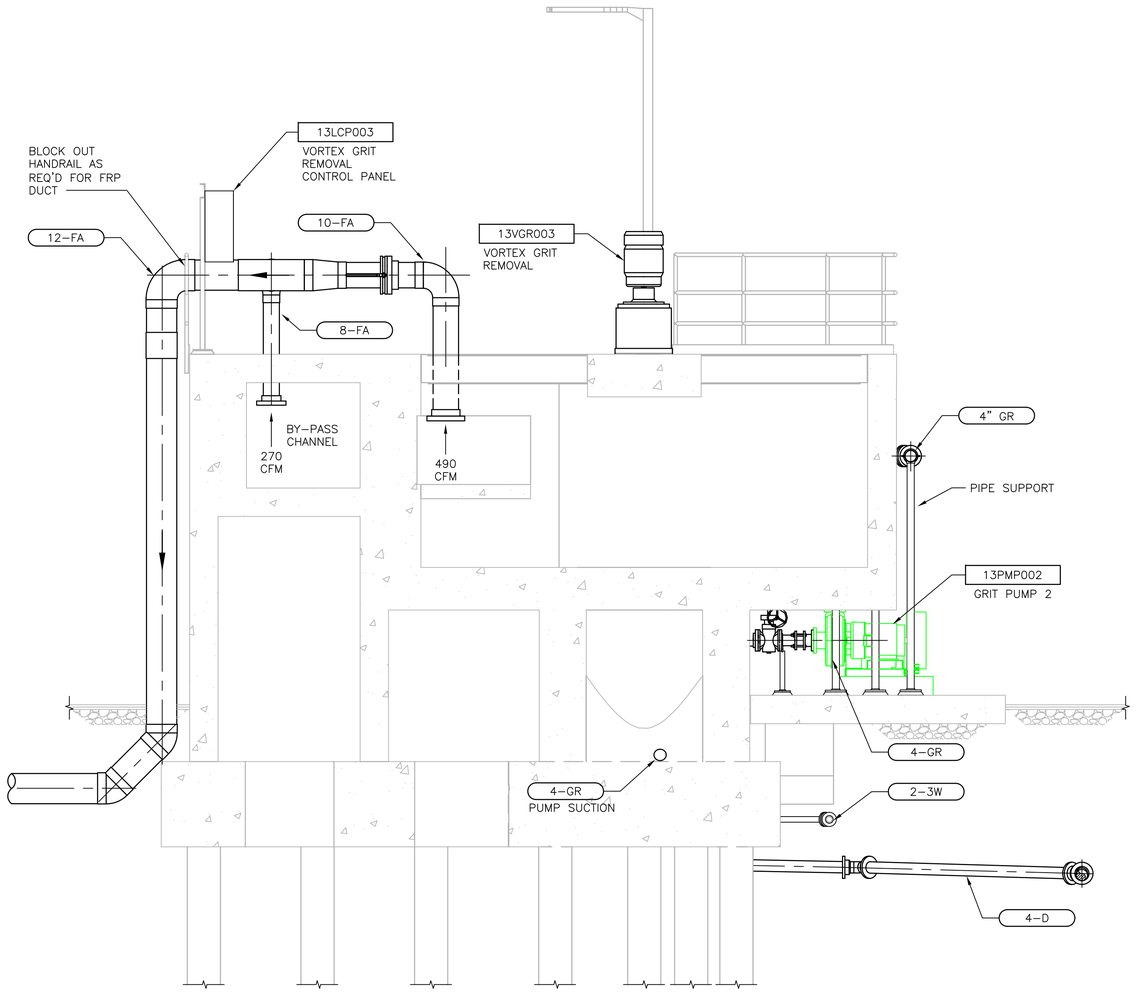


SECTION
3/8" = 1'–0"
F 13P101

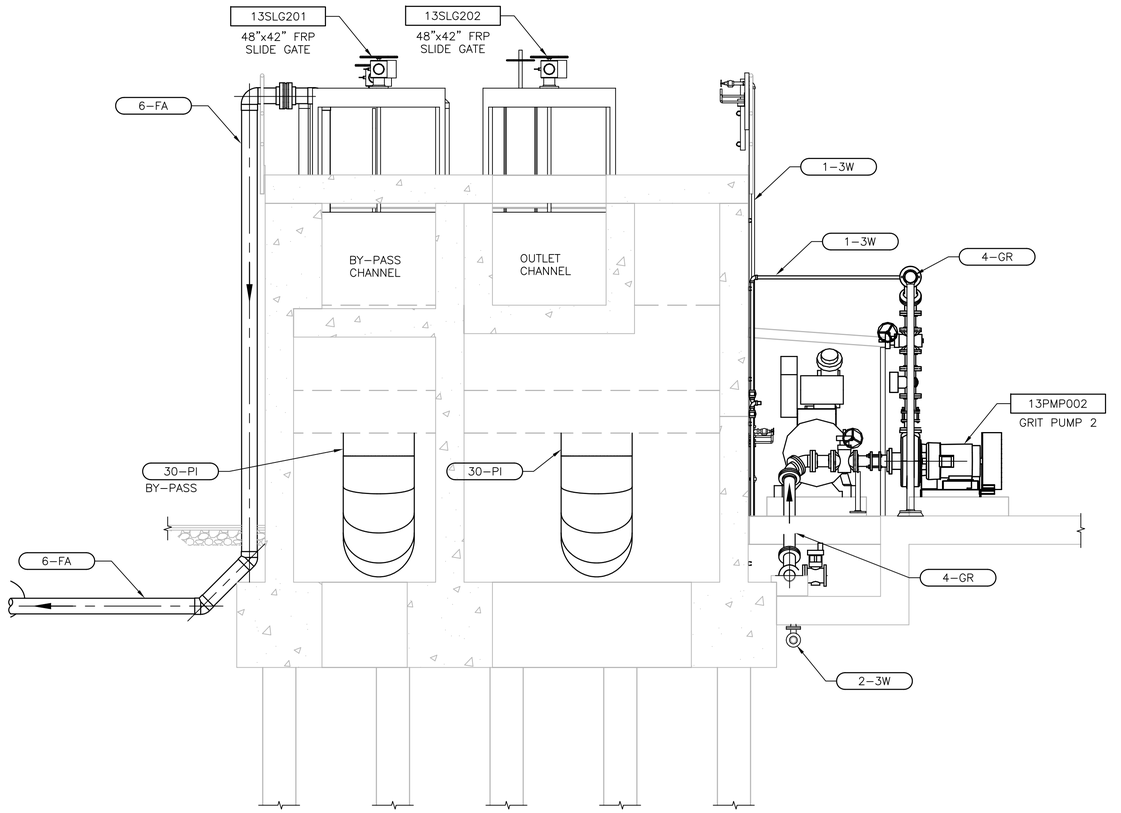


SECTION
3/8" = 1'–0"
G 13P101

FILE: 215786-13P107.dwg
DATE: Oct 07, 2015-4:35:44pm, rsnider

HDR Engineering, Inc.

| ISSUE | DATE | DESCRIPTION |
|---|---|---|
| A | JUNE 2015 | ISSUED FOR BID |

| | |
|---|---|
| PROJECT MANAGER | C. OLSON |
| | |
| DESIGNED | R. NATOLI |
| DESIGNED | |
| CHECKED | C. OLSON |
| DRAWN | B. DOWN |
| DATE | JUNE 30, 2015 |
| | |
| PROJECT NUMBER | 215786 |

REGISTERED PROFESSIONAL ENGINEER
ROBERT G. NATOLI
NO. 78271
EXP. 09/30/15
CIVIL
STATE OF CALIFORNIA
06-30-15

CITY OF PINOLE CALIFORNIA 1903

PINOLE/HERCULES
WATER POLLUTION
CONTROL PLANT UPGRADE
CLIENT PN

**PROCESS**

**GRIT BASIN SECTIONS 5**

0 1" 2"

| | |
|---|---|
| FILENAME | 215786-13P107 |
| SCALE | AS NOTED |

SHEET
**13P107**

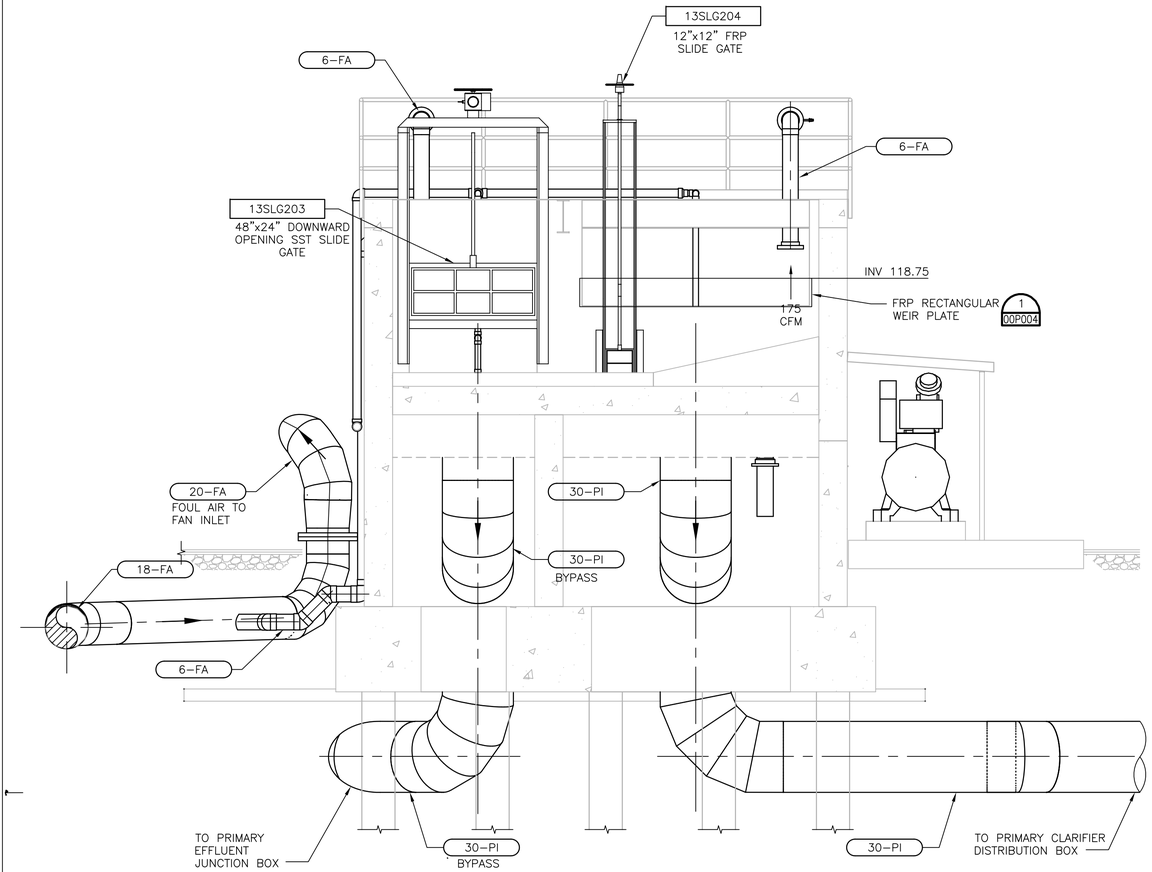


SECTION
3/8" = 1'-0"
H
13P101

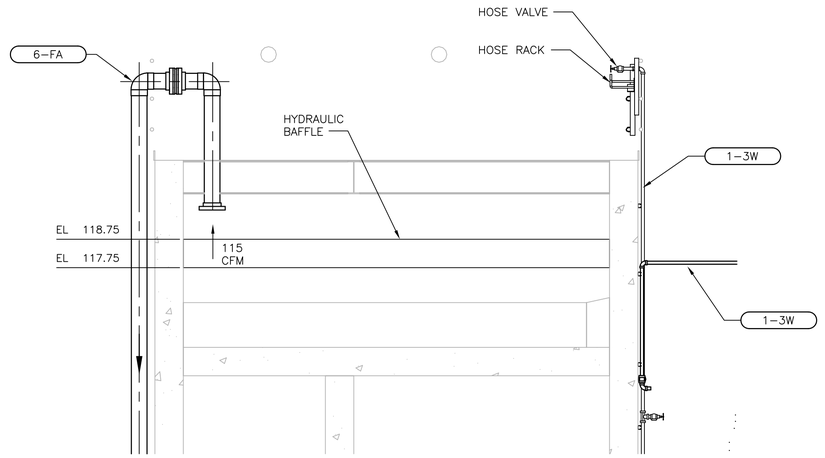


SECTION
3/8" = 1'-0"
J
13P101

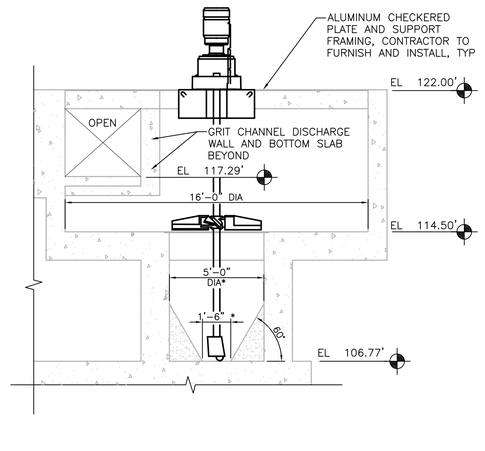


SECTION–TYPE "A"
1/4" = 1'-0"
K
13P102

NOTES:
1. DIMENSIONS PER
STRUCTURAL DRAWINGS.

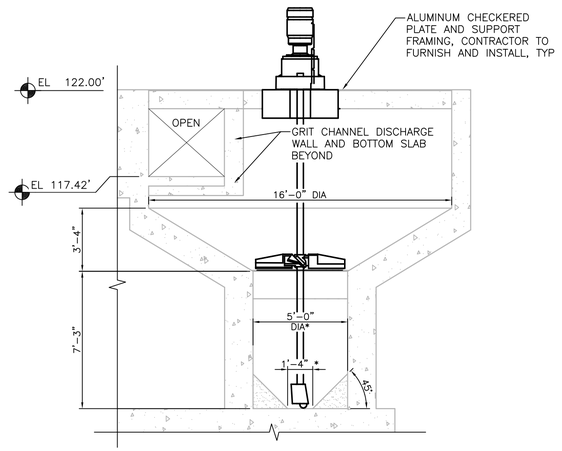


SECTION–TYPE "B"
1/4" = 1'-0"
K
13P102

NOTES:
1. STRUCTURAL AND GRIT PIPING CHANGES FOR
TYPE "B" GRIT REMOVAL RESPONSIBILITY OF THE
CONTRACTOR.

FILE: 215786-13P108.dwg
DATE: Oct 07, 2015-4:35:58am, rsnider

HDR Engineering, Inc.

| ISSUE | DATE | DESCRIPTION |
|---|---|---|
| A | JUNE 2015 | ISSUED FOR BID |

| | |
|---|---|
| PROJECT MANAGER | C. OLSON |
| DESIGNED | R. NATOLI |
| DESIGNED | |
| CHECKED | C. OLSON |
| DRAWN | B. DOWN |
| DATE | JUNE 30, 2015 |
| PROJECT NUMBER | 215786 |

REGISTERED PROFESSIONAL ENGINEER
ROBERT G. NATOLI
NO. 78271
EXP. 09/30/15
CIVIL
STATE OF CALIFORNIA
06-30-15

CITY OF PINOLE CALIFORNIA 1903

PINOLE/HERCULES
WATER POLLUTION
CONTROL PLANT UPGRADE
CLIENT PN

**PROCESS**

**GRIT BASIN**
**SECTIONS AND DETAILS**

0 1" 2"

| | |
|---|---|
| FILENAME | 215786-13P108 |
| SCALE | AS NOTED |

SHEET
**13P108**

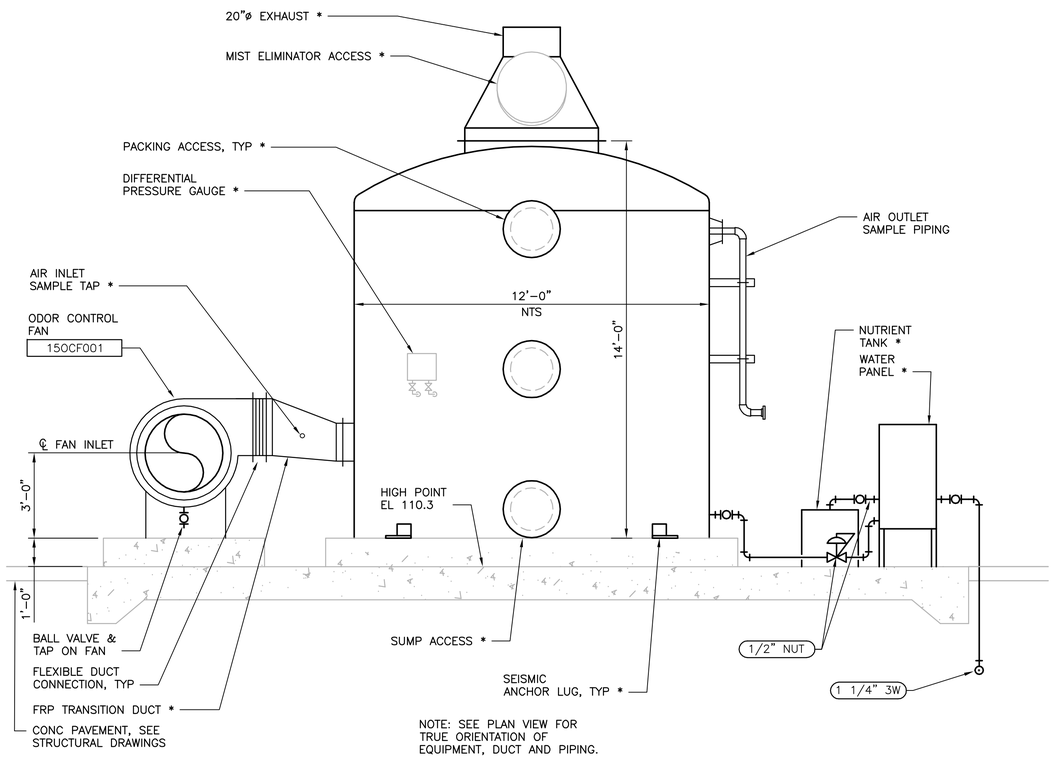


NOTE: SEE PLAN VIEW FOR TRUE ORIENTATION OF EQUIPMENT, DUCT AND PIPING.

## SECTION A
3/8" = 1'-0"

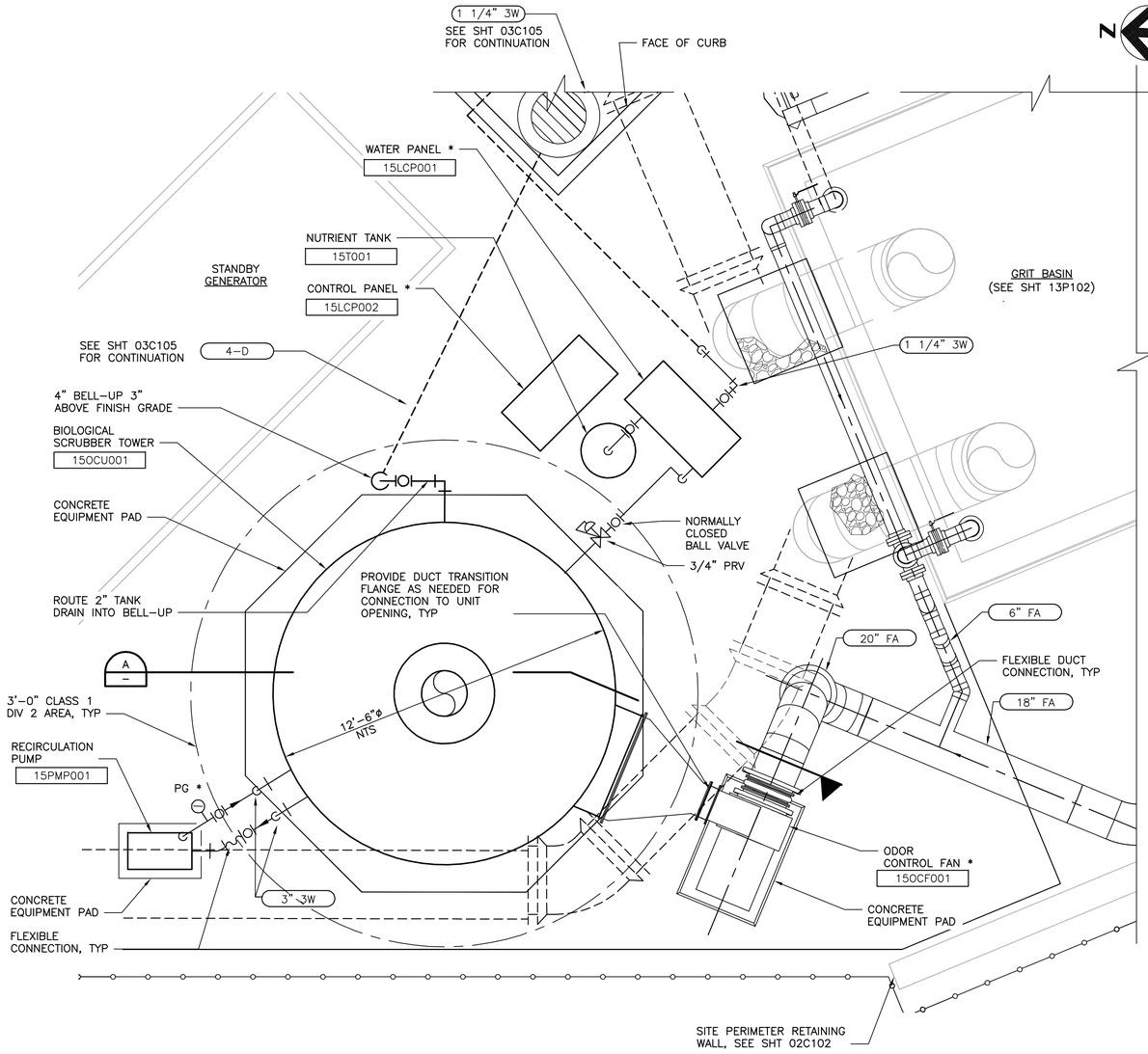


## ODOR CONTROL AREA PLAN
3/8" = 1'-0"

FILE: 15P101.dwg
DATE: Oct 06, 2015 - 7:22:30pm, renider

HDR Engineering, Inc.

| ISSUE | DATE | DESCRIPTION |
|---|---|---|
| A | JUNE 2015 | ISSUED FOR BID |

| | |
|---|---|
| PROJECT MANAGER | C. OLSON |
| DESIGNED | T. KONTONICKAS |
| DESIGNED | |
| CHECKED | C. OLSON |
| DRAWN | P. VAN MEURS |
| DATE | JUNE 30, 2015 |
| PROJECT NUMBER | 215786 |

REGISTERED PROFESSIONAL ENGINEER
THEODORE H. KONTONICKAS
NO. 29378
EXP. 06/30/17
MECHANICAL
STATE OF CALIFORNIA
06-30-15

CITY OF PINOLE CALIFORNIA 1903

PINOLE/HERCULES
WATER POLLUTION
CONTROL PLANT UPGRADE
CLIENT PN

**PROCESS**
**HEADWORKS**
**ODOR CONTROL FACILITY**
**PLAN AND SECTION**

0 1" 2"

| | |
|---|---|
| FILENAME | 15P101 |
| SCALE | 1/4"=1'-0" |

SHEET **15P101**

NOTES:

1. REFER TO CONSTRUCTION SEQUENCING SHEETS FOR THE STAGING OF NEW FACILITIES.
2. SEE SHEET 03C103 FOR PROPOSED YARD PIPING IN THIS AREA.

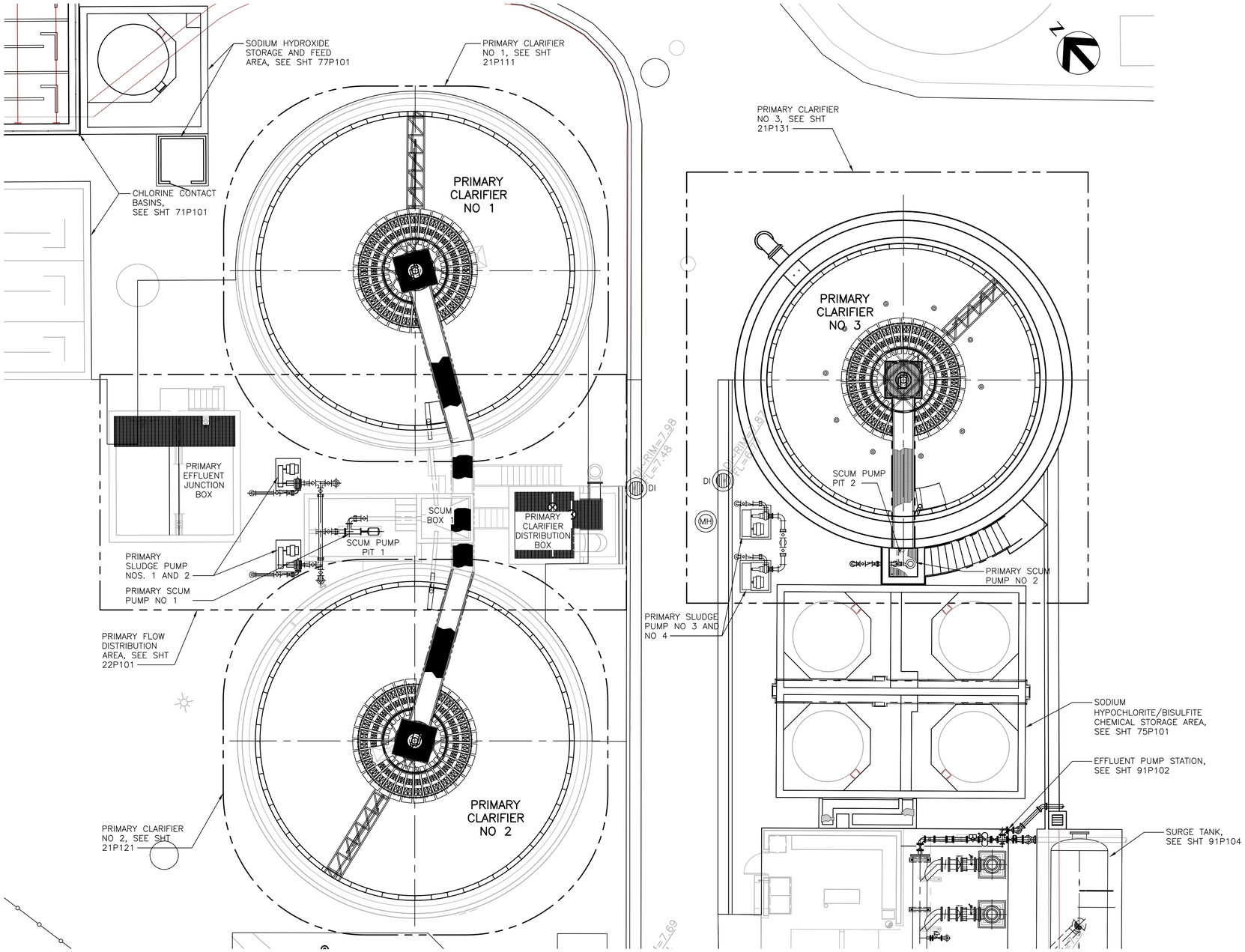


FILE: 215786-21P101.dwg
DATE: Oct 07, 2015-4:41:11am, ranider

HDR Engineering, Inc.

| ISSUE | DATE | DESCRIPTION |
|---|---|---|
| A | JUNE 2015 | ISSUED FOR BID |

| | |
|---|---|
| PROJECT MANAGER | C. OLSON |
| DESIGNED | T. KONTONICKAS |
| DESIGNED | H. GERGES |
| CHECKED | C. OLSON |
| DRAWN | M. FOYLE |
| DATE | JUNE 30, 2015 |
| PROJECT NUMBER | 215786 |

REGISTERED PROFESSIONAL ENGINEER THEODORE H. KONTONICKAS NO. 29378 EXP. 06/30/17 MECHANICAL STATE OF CALIFORNIA 06-30-15

CITY OF PINOLE CALIFORNIA 1903

PINOLE/HERCULES WATER POLLUTION CONTROL PLANT UPGRADE CLIENT PN

**PROCESS**

**PRIMARY CLARIFIERS KEY PLAN**

0 1" 2"

| | |
|---|---|
| FILENAME | 215786-21P101 |
| SCALE | 1/8" = 1'-0" |

SHEET **21P101**

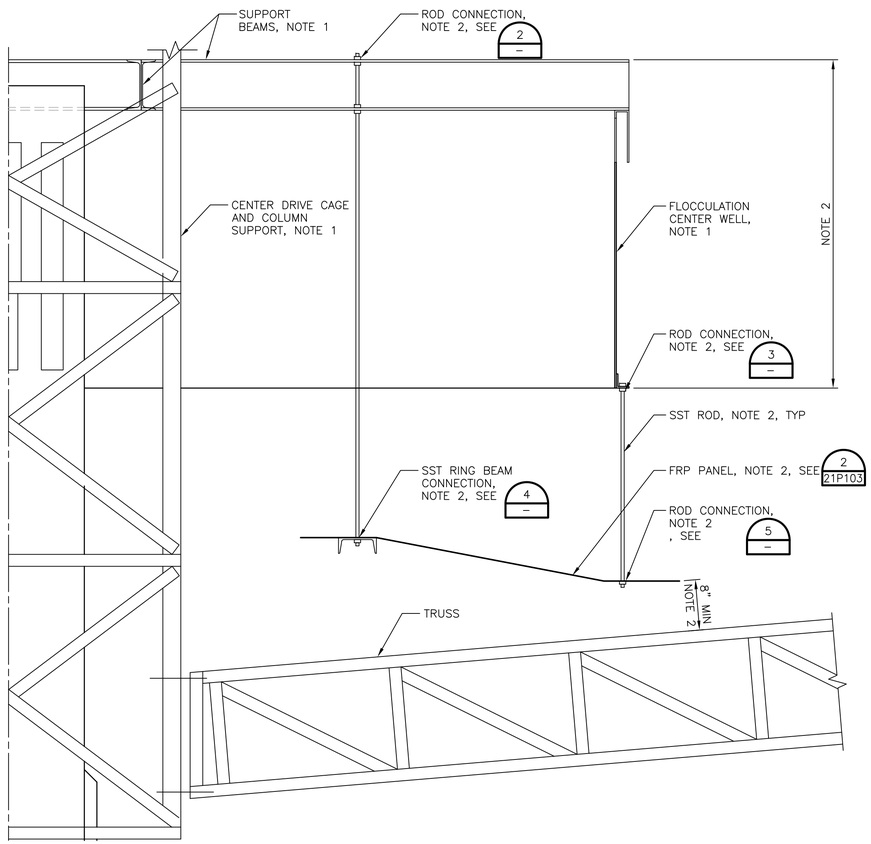


## FRP SLUDGE PROTECTION BAFFLE SUPPORT DETAIL 1
1"=1'-0"
21P111 21P121 21P131

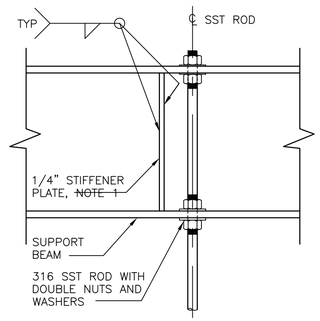


## CROSS BEAM AND ROD CONNECTION DETAIL 2
3"=1'-0"

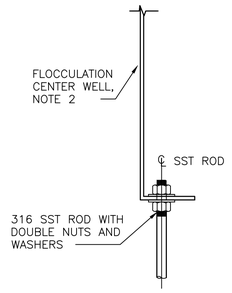


## FLOCCULATION CENTER WELL BOTTOM EDGE DETAIL 3
3"=1'-0"

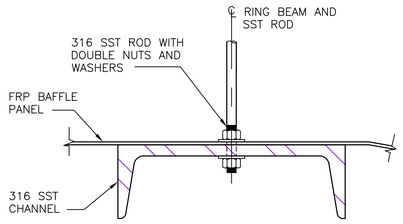


## RING BEAM DETAIL 4
3"=1'-0"

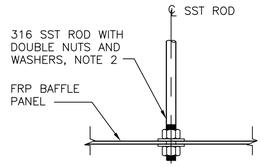


## HANGER ROD AND FRP PANEL CONNECTION DETAIL 5
3"=1'-0"

NOTES:

1. CENTER COLUMN, SUPPORT CAGE, SLUDGE COLLECTOR AND SUPPORT, SLUDGE MANIFOLD, SCUM SKIMMER AND SUPPORT, SCUM BEACH AND SUPPORT, WALKWAY, PLATFORM, HANDRAILING, DRIVE MECHANISM, AND CONTROL PANEL PER CLARIFIER MECHANISM FABRICATOR (SEE SPECIFICATION SECTION 11125).
2. SEE SPECIFICATION SECTION 11151 FOR FRP SLUDGE PROTECTION SYSTEM, AND ITS SUPPORT SYSTEM, WEIRS AND SCUM PLATES (ALL SUPPLIED BY FRP FABRICATORS).

FILE: 215786-21P102.dwg
DATE: Oct 07, 2015--4:41:18am, rsnider

HDR Engineering, Inc.

| ISSUE | DATE | DESCRIPTION |
|---|---|---|
| A | JUNE 2015 | ISSUED FOR BID |

| | |
|---|---|
| PROJECT MANAGER | C. OLSON |
| DESIGNED | T. KONTONICKAS |
| DESIGNED | H. GERGES |
| CHECKED | C. OLSON |
| DRAWN | M. FOYLE |
| DATE | JUNE 30, 2015 |
| PROJECT NUMBER | 215786 |

REGISTERED PROFESSIONAL ENGINEER
THEODORE H. KONTONICKAS
NO. 29378
EXP. 06/30/17
MECHANICAL
STATE OF CALIFORNIA
06-30-15

CITY OF PINOLE CALIFORNIA 1903

PINOLE/HERCULES
WATER POLLUTION
CONTROL PLANT UPGRADE
CLIENT PN

**PROCESS**

**PRIMARY CLARIFIERS DETAILS 1**

0 1" 2"

| | |
|---|---|
| FILENAME | 215786-21P102 |
| SCALE | AS NOTED |

SHEET **21P102**

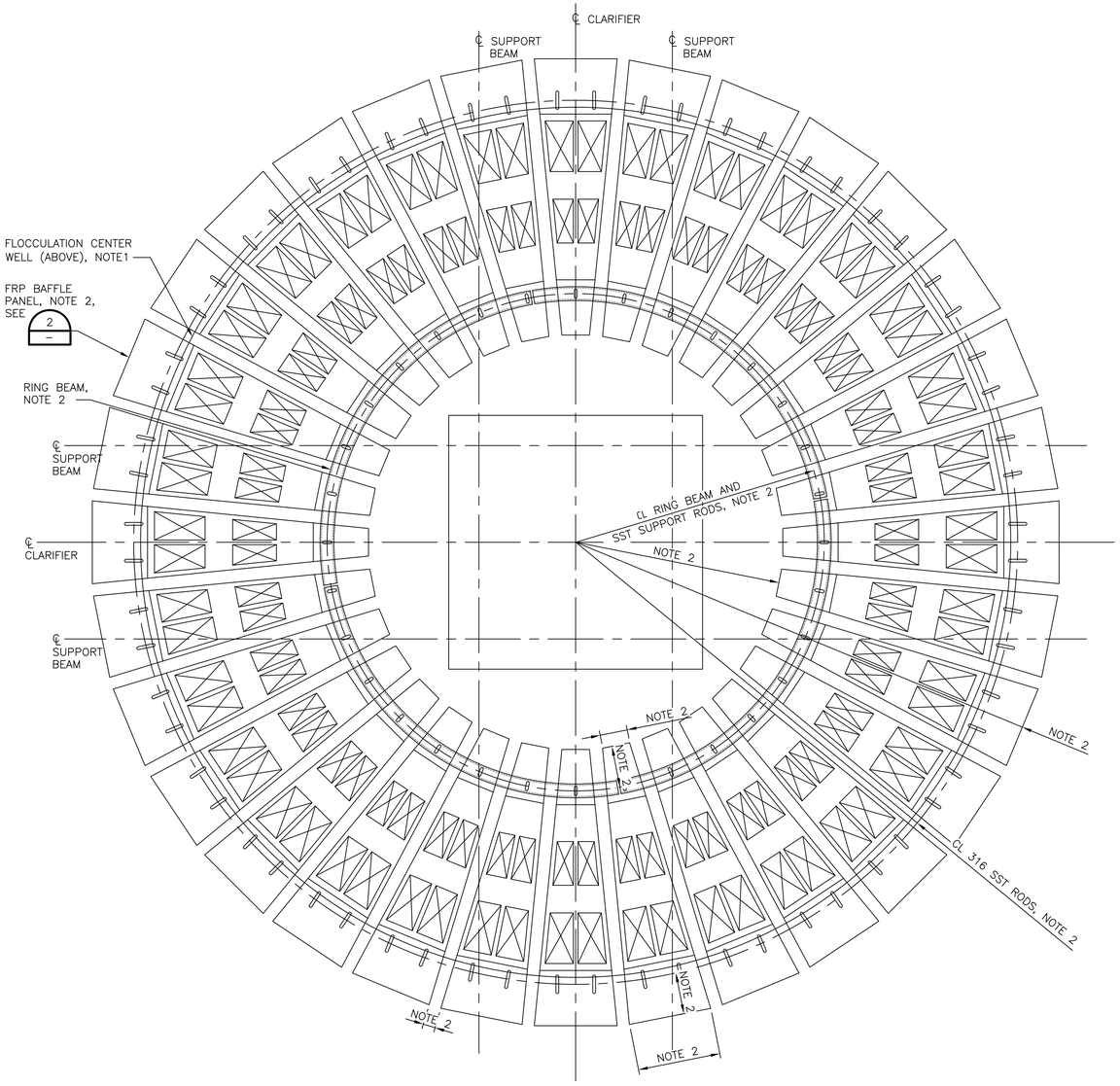


## SLUDGE PROTECTION BAFFLE LAYOUT DETAIL

3/4"=1'–0"

1 — 21P111, 21P121, 21P131

NOTES:

1. CENTER COLUMN, SUPPORT CAGE, SLUDGE COLLECTOR AND SUPPORT, SLUDGE MANIFOLD, SCUM SKIMMER AND SUPPORT, SCUM BEACH AND SUPPORT, WALKWAY, PLATFORM, HANDRAILING, DRIVE MECHANISM, AND CONTROL PANEL PER CLARIFIER MECHANISM FABRICATOR (SEE SPECIFICATION SECTION 11125).
2. SEE SPECIFICATION SECTION 11151 FOR FRP SLUDGE PROTECTION SYSTEM, AND ITS SUPPORT SYSTEM, WEIRS AND SCUM PLATES (ALL SUPPLIED BY FRP FABRICATORS).
3. ALL FASTENERS TO BE 316 STAINLESS STEEL.

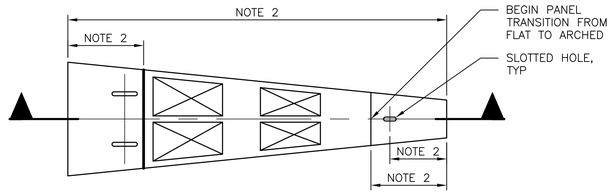


PLAN

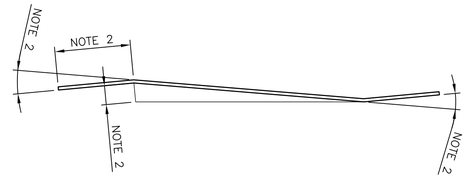


SECTION

## FRP PANEL DETAIL – HORIZONTAL PROJECTION

1"=1'–0"

2

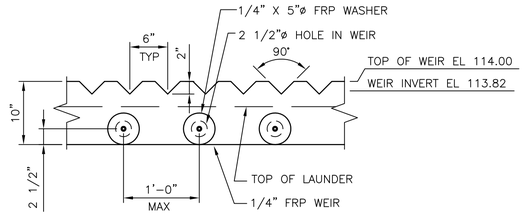


ELEVATION

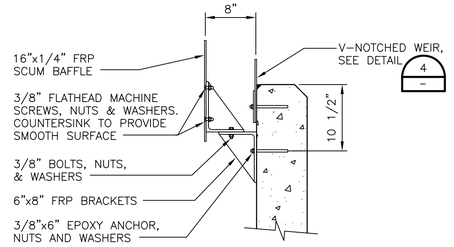


TYPICAL SECTION

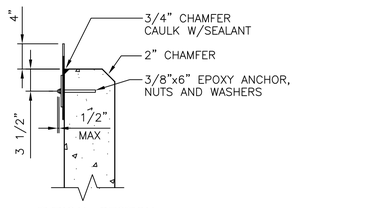


TYPICAL SECTION

## SCUM BAFFLE DETAIL

1" = 1'–0"

3 — 21P111, 21P121, 21P131

## V–NOTCH WEIR DETAIL

1" = 1'–0"

4 — 21P111, 21P121, 21P131

FILE: 215786–21P103.dwg
DATE: Oct 07, 2015–4:41:24pm, rsnider

HDR Engineering, Inc.

| ISSUE | DATE | DESCRIPTION |
|---|---|---|
| A | JUNE 2015 | ISSUED FOR BID |

| | |
|---|---|
| PROJECT MANAGER | C. OLSON |
| DESIGNED | T. KONTONICKAS |
| DESIGNED | H. GERGES |
| CHECKED | C. OLSON |
| DRAWN | M. FOYLE |
| DATE | JUNE 30, 2015 |
| PROJECT NUMBER | 215786 |

REGISTERED PROFESSIONAL ENGINEER THEODORE H. KONTONICKAS NO. 29378 EXP. 06/30/17 MECHANICAL STATE OF CALIFORNIA 06-30-15

CITY OF PINOLE CALIFORNIA 1903

PINOLE/HERCULES WATER POLLUTION CONTROL PLANT UPGRADE CLIENT PN

**PROCESS**

**PRIMARY CLARIFIERS DETAILS 2**

0 1" 2"

| | |
|---|---|
| FILENAME | 215786–21P103 |
| SCALE | AS NOTED |

SHEET **21P103**

NOTES:

1. CENTER COLUMN, SUPPORT CAGE, SLUDGE COLLECTOR AND SUPPORT, SLUDGE MANIFOLD, SCUM SKIMMER AND SUPPORT, SCUM BEACH AND SUPPORT, WALKWAY, PLATFORM, HANDRAILING, DRIVE MECHANISM, AND CONTROL PANEL PER CLARIFIER MECHANISM FABRICATOR (SEE SPECIFICATION SECTION 11125).
2. SEE SPECIFICATION SECTION 11151 FOR FRP SLUDGE PROTECTION SYSTEM, AND ITS SUPPORT SYSTEM, WEIRS AND SCUM PLATES (ALL SUPPLIED BY FRP FABRICATORS).

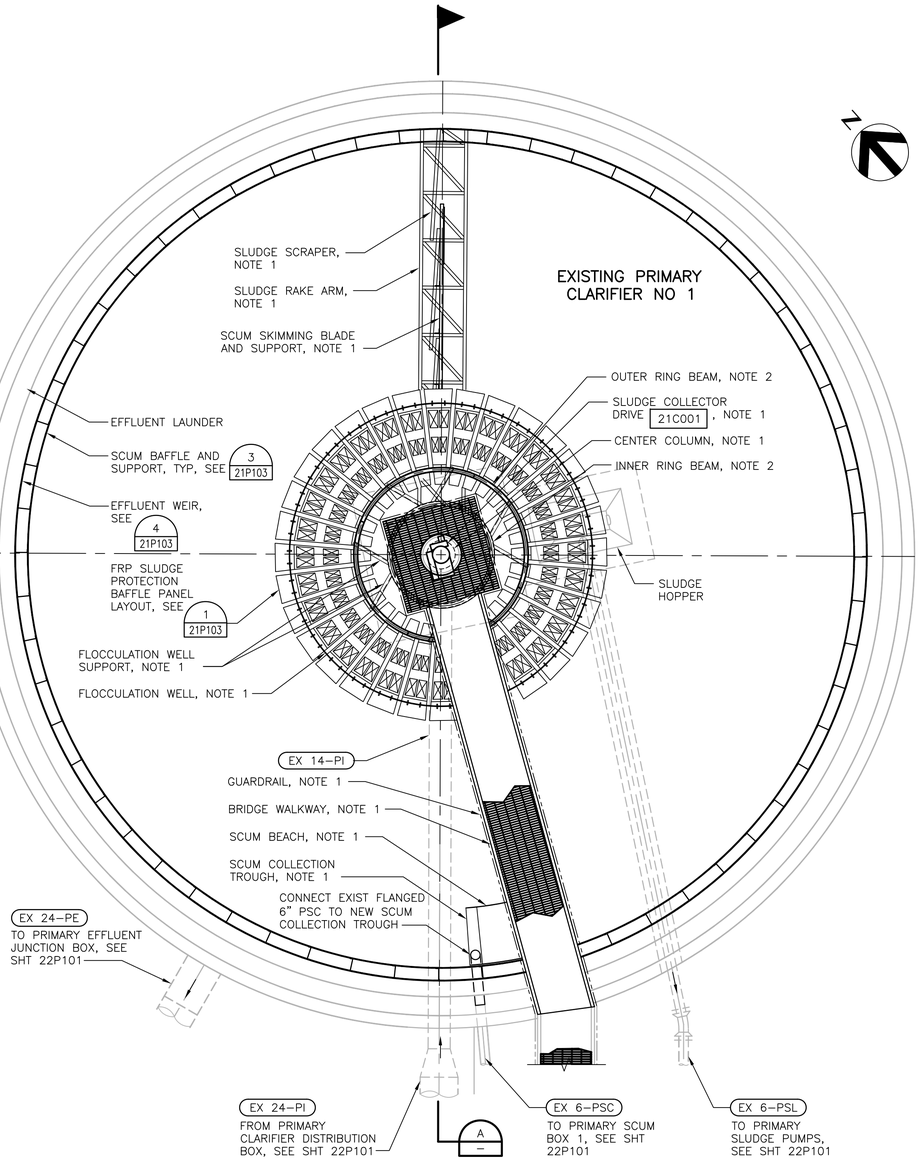


## CLARIFIER NO 1 PLAN
1/4" = 1'–0"

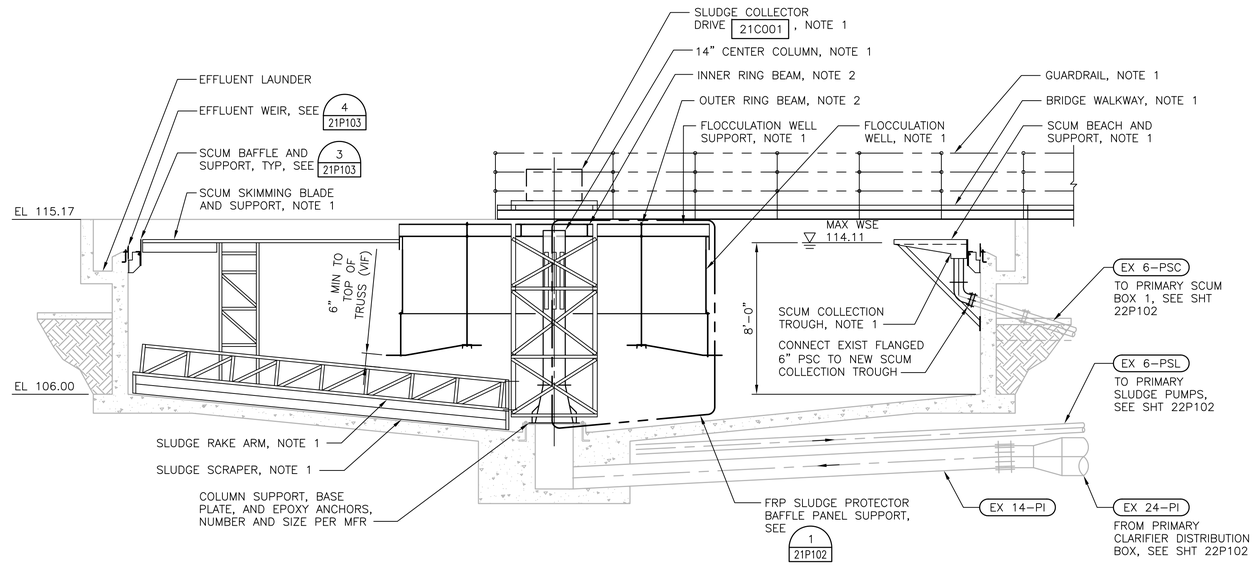


## SECTION
1/4" = 1'–0"

FILE: 215786–21P111.dwg
DATE: Oct 07, 2015–4:41:30am, rsnider

HDR Engineering, Inc.

| ISSUE | DATE | DESCRIPTION |
|---|---|---|
| A | JUNE 2015 | ISSUED FOR BID |

| | |
|---|---|
| PROJECT MANAGER | C. OLSON |
| DESIGNED | T. KONTONICKAS |
| DESIGNED | H. GERGES |
| CHECKED | C. OLSON |
| DRAWN | M. FOYLE |
| DATE | JUNE 30, 2015 |
| PROJECT NUMBER | 215786 |

REGISTERED PROFESSIONAL ENGINEER
THEODORE H. KONTONICKAS
NO. 29378
EXP. 06/30/17
MECHANICAL
STATE OF CALIFORNIA
06-30-15

CITY OF PINOLE CALIFORNIA 1903

PINOLE/HERCULES
WATER POLLUTION
CONTROL PLANT UPGRADE
CLIENT PN

**PROCESS**

**EXISTING PRIMARY CLARIFIER NO 1 MODIFICATIONS PLAN AND SECTION**

0 1" 2"

| | |
|---|---|
| FILENAME | 215786–21P111 |
| SCALE | AS NOTED |

SHEET **21P111**

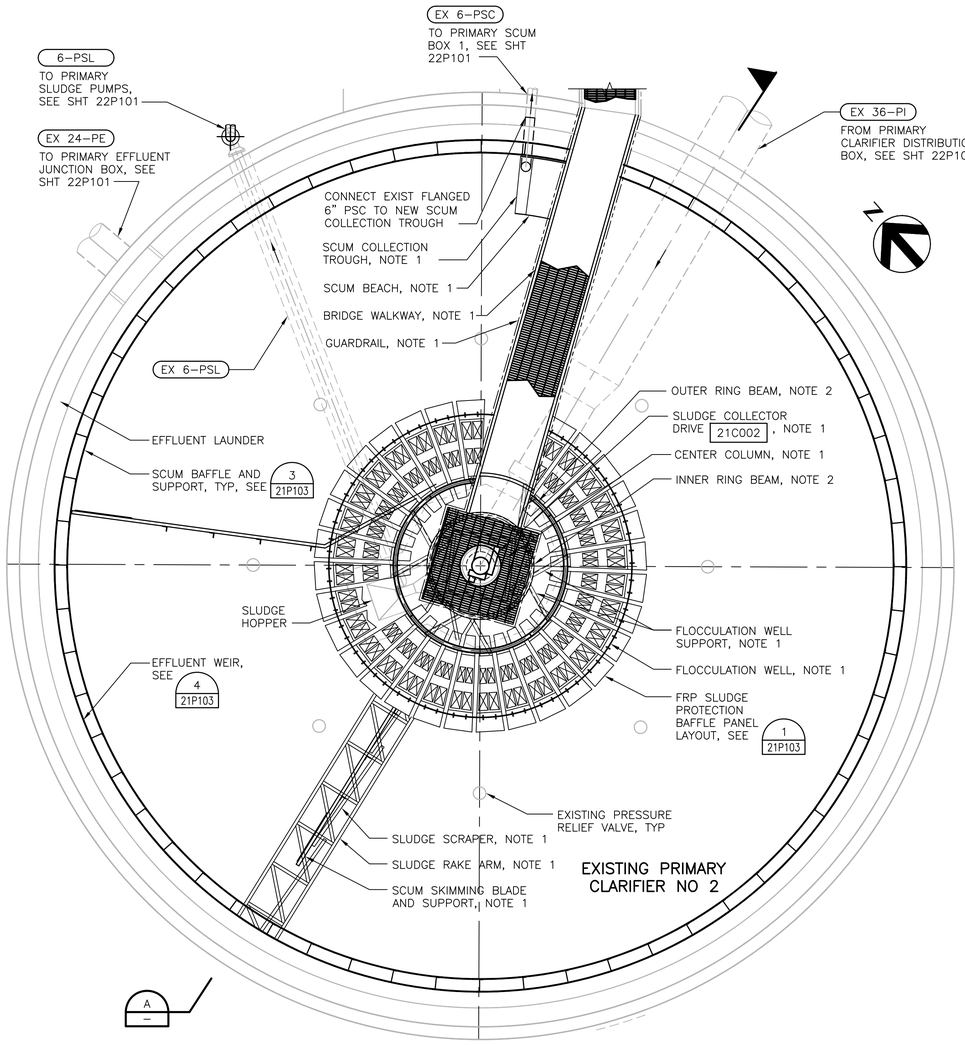


## CLARIFIER NO 2 PLAN
1/4" = 1'–0"

NOTES:

1. CENTER COLUMN, SUPPORT CAGE, SLUDGE COLLECTOR AND SUPPORT, SLUDGE MANIFOLD, SCUM SKIMMER AND SUPPORT, SCUM BEACH AND SUPPORT, WALKWAY, PLATFORM, HANDRAILING, DRIVE MECHANISM, AND CONTROL PANEL PER CLARIFIER MECHANISM FABRICATOR (SEE SPECIFICATION SECTION 11125).
2. SEE SPECIFICATION SECTION 11151 FOR FRP SLUDGE PROTECTION SYSTEM, AND ITS SUPPORT SYSTEM, WEIRS AND SCUM PLATES (ALL SUPPLIED BY FRP FABRICATORS).

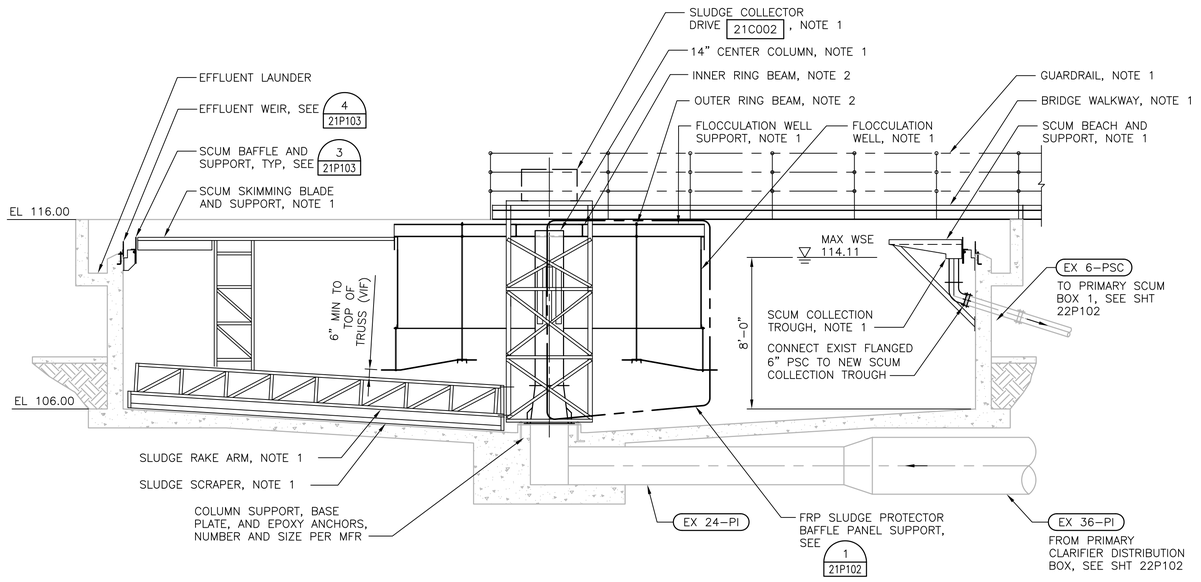


## SECTION
1/4" = 1'–0"
A

FILE: 215786–21P121.dwg
DATE: Oct 07, 2015–4:41:38pm, rsnider

HDR Engineering, Inc.

| ISSUE | DATE | DESCRIPTION |
|---|---|---|
| A | JUNE 2015 | ISSUED FOR BID |

| | |
|---|---|
| PROJECT MANAGER | C. OLSON |
| DESIGNED | T. KONTONICKAS |
| DESIGNED | H. GERGES |
| CHECKED | C. OLSON |
| DRAWN | M. FOYLE |
| DATE | JUNE 30, 2015 |
| PROJECT NUMBER | 215786 |

REGISTERED PROFESSIONAL ENGINEER
THEODORE H. KONTONICKAS
NO. 29378
EXP. 06/30/17
MECHANICAL
STATE OF CALIFORNIA
06-30-15

CITY OF PINOLE CALIFORNIA 1903

PINOLE/HERCULES
WATER POLLUTION
CONTROL PLANT UPGRADE
CLIENT PN

**PROCESS**

**EXISTING PRIMARY CLARIFIER NO 2 MODIFICATIONS PLAN AND SECTION**

0 1" 2"

| | |
|---|---|
| FILENAME | 215786–21P121 |
| SCALE | AS NOTED |

SHEET **21P121**

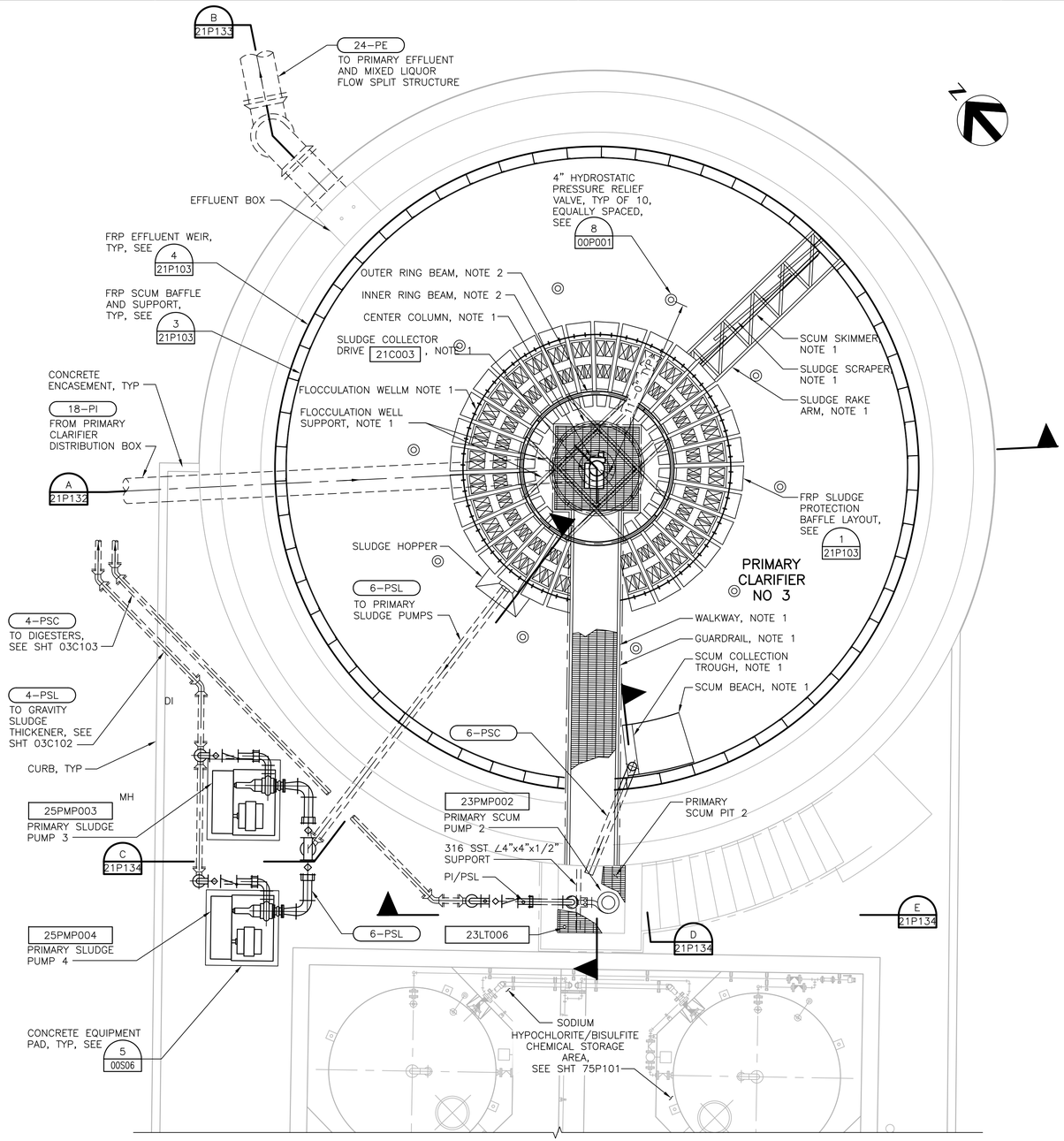


# PRIMARY CLARIFIER NO 3 PLAN

1/4" = 1'–0"

NOTES:

1. CENTER COLUMN, SUPPORT CAGE, SLUDGE COLLECTOR AND SUPPORT, SLUDGE MANIFOLD, SCUM SKIMMER AND SUPPORT, SCUM BEACH AND SUPPORT, WALKWAY, PLATFORM, HANDRAILING, DRIVE MECHANISM, AND CONTROL PANEL PER CLARIFIER MECHANISM FABRICATOR (SEE SPECIFICATION SECTION 11125).
2. SEE SPECIFICATION SECTION 11151 FOR FRP SLUDGE PROTECTION SYSTEM, AND ITS SUPPORT SYSTEM, WEIRS AND SCUM PLATES (ALL SUPPLIED BY FRP FABRICATORS).

FILE: 215786–21P131.dwg
DATE: Oct 07, 2015–4:41:45am, rsnider

HDR Engineering, Inc.

| ISSUE | DATE | DESCRIPTION |
|---|---|---|
| A | JUNE 2015 | ISSUED FOR BID |

| | |
|---|---|
| PROJECT MANAGER | C. OLSON |
| DESIGNED | T. KONTONICKAS |
| DESIGNED | H. GERGES |
| CHECKED | C. OLSON |
| DRAWN | M. FOYLE |
| DATE | JUNE 30, 2015 |
| PROJECT NUMBER | 215786 |

REGISTERED PROFESSIONAL ENGINEER THEODORE H. KONTONICKAS NO. 29378 EXP. 06/30/17 MECHANICAL STATE OF CALIFORNIA 06-30-15

CITY OF PINOLE CALIFORNIA 1903

PINOLE/HERCULES WATER POLLUTION CONTROL PLANT UPGRADE CLIENT PN

**PROCESS**

**PRIMARY CLARIFIER NO 3 PLAN**

0 1" 2"

| | |
|---|---|
| FILENAME | 215786–21P131 |
| SCALE | AS NOTED |

SHEET **21P131**

NOTES:

1. CENTER COLUMN, SUPPORT CAGE, SLUDGE COLLECTOR AND SUPPORT, SLUDGE MANIFOLD, SCUM SKIMMER AND SUPPORT, SCUM BEACH AND SUPPORT, WALKWAY, PLATFORM, HANDRAILING, DRIVE MECHANISM, AND CONTROL PANEL PER CLARIFIER MECHANISM FABRICATOR (SEE SPECIFICATION SECTION 11125).
2. SEE SPECIFICATION SECTION 11151 FOR FRP SLUDGE PROTECTION SYSTEM, AND ITS SUPPORT SYSTEM, WEIRS AND SCUM PLATES (ALL SUPPLIED BY FRP FABRICATORS).

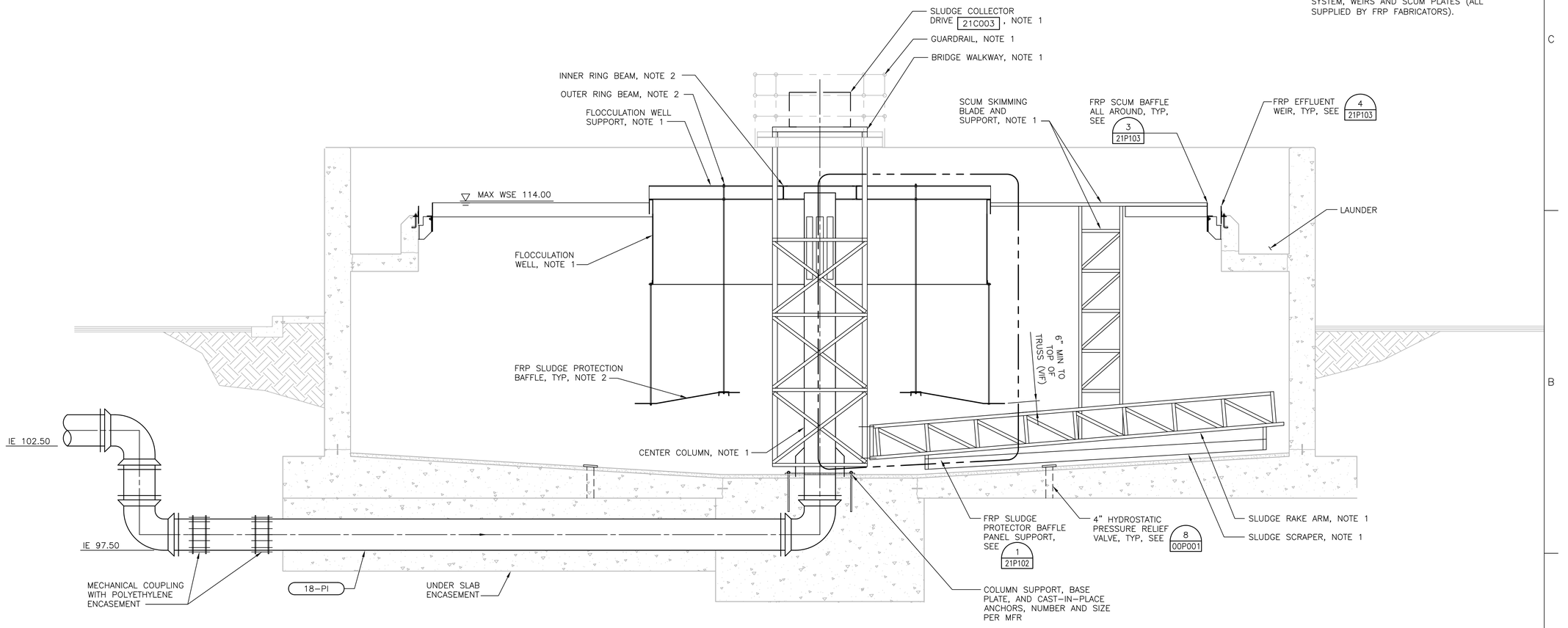


## SECTION
3/8" = 1'-0"

A 21P131

FILE: 215786-21P132.dwg
DATE: Oct 07, 2015-4:41:51am, rsnider

HDR Engineering, Inc.

| ISSUE | DATE | DESCRIPTION |
|---|---|---|
| A | JUNE 2015 | ISSUED FOR BID |

| | |
|---|---|
| PROJECT MANAGER | C. OLSON |
| DESIGNED | T. KONTONICKAS |
| DESIGNED | H. GERGES |
| CHECKED | C. OLSON |
| DRAWN | M. FOYLE |
| DATE | JUNE 30, 2015 |
| PROJECT NUMBER | 215786 |

REGISTERED PROFESSIONAL ENGINEER
THEODORE H. KONTONICKAS
NO. 29378
EXP. 06/30/17
MECHANICAL
STATE OF CALIFORNIA
06-30-15

CITY OF PINOLE CALIFORNIA 1903

PINOLE/HERCULES
WATER POLLUTION
CONTROL PLANT UPGRADE
CLIENT PN

**PROCESS**

**PRIMARY CLARIFIER NO 3**
**SECTION 1**

0 1" 2"

| | |
|---|---|
| FILENAME | 215786-21P132 |
| SCALE | AS NOTED |

SHEET
**21P132**

NOTES:

1. CENTER COLUMN, SUPPORT CAGE, SLUDGE COLLECTOR AND SUPPORT, SLUDGE MANIFOLD, SCUM SKIMMER AND SUPPORT, SCUM BEACH AND SUPPORT, WALKWAY, PLATFORM, HANDRAILING, DRIVE MECHANISM, AND CONTROL PANEL PER CLARIFIER MECHANISM FABRICATOR (SEE SPECIFICATION SECTION 11125).
2. SEE SPECIFICATION SECTION 11151 FOR FRP SLUDGE PROTECTION SYSTEM, AND ITS SUPPORT SYSTEM, WEIRS AND SCUM PLATES (ALL SUPPLIED BY FRP FABRICATORS).

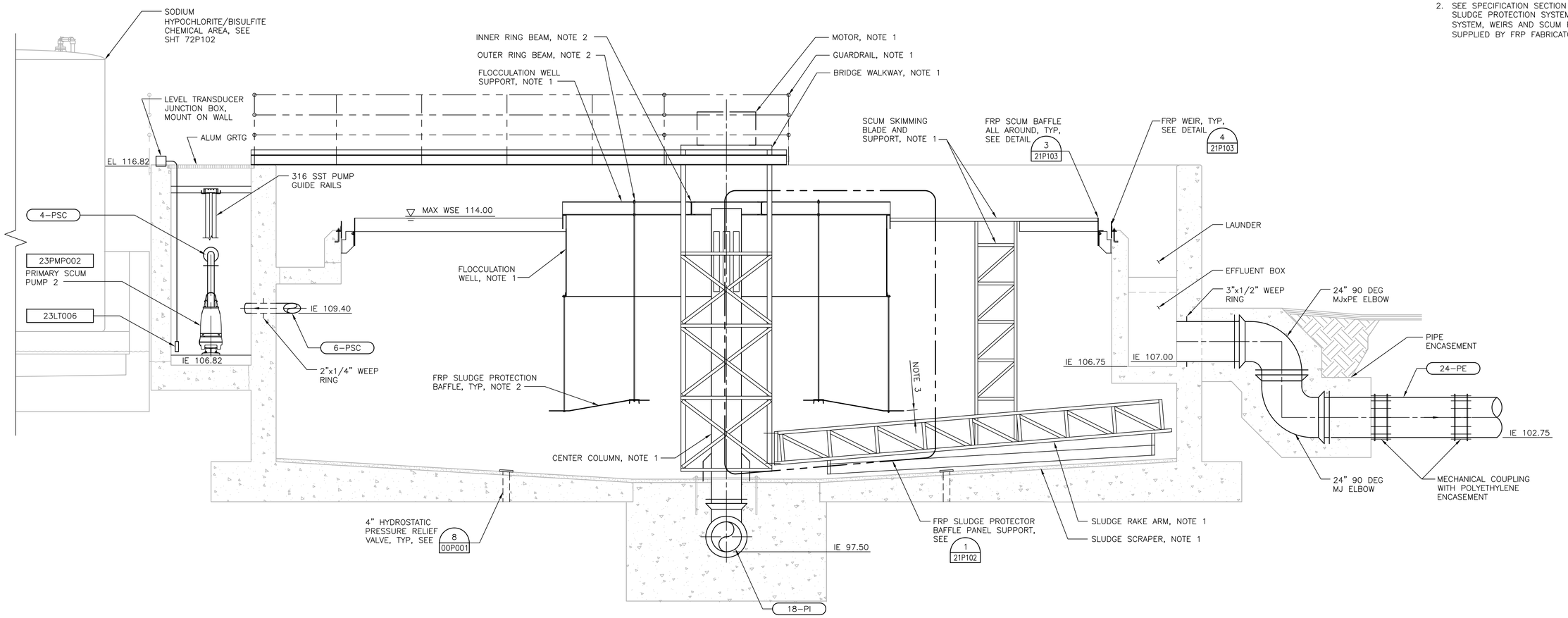


## SECTION
3/8" = 1'-0"

B 21P131

FILE: 215786-21P133.dwg
DATE: Oct 07, 2015-4:41:57pm, rsnider

HDR Engineering, Inc.

| ISSUE | DATE | DESCRIPTION |
|---|---|---|
| A | JUNE 2015 | ISSUED FOR BID |

| | |
|---|---|
| PROJECT MANAGER | C. OLSON |
| | |
| DESIGNED | T. KONTONICKAS |
| DESIGNED | H. GERGES |
| CHECKED | C. OLSON |
| DRAWN | M. FOYLE |
| DATE | JUNE 30, 2015 |
| | |
| PROJECT NUMBER | 215786 |

REGISTERED PROFESSIONAL ENGINEER
THEODORE H. KONTONICKAS
NO. 29378
EXP. 06/30/17
MECHANICAL
STATE OF CALIFORNIA
06-30-15

CITY OF PINOLE CALIFORNIA 1903

PINOLE/HERCULES WATER POLLUTION CONTROL PLANT UPGRADE
CLIENT PN

**PROCESS**

**PRIMARY CLARIFIER NO 3 SECTION 2**

0 1" 2"

| | |
|---|---|
| FILENAME | 215786-21P133 |
| SCALE | AS NOTED |

SHEET **21P133**

NOTES:

1. CENTER COLUMN, SUPPORT CAGE, SLUDGE COLLECTOR AND SUPPORT, SLUDGE MANIFOLD, SCUM SKIMMER AND SUPPORT, SCUM BEACH AND SUPPORT, WALKWAY, PLATFORM, HANDRAILING, DRIVE MECHANISM, AND CONTROL PANEL PER CLARIFIER MECHANISM FABRICATOR (SEE SPECIFICATION SECTION 11125).
2. SEE SPECIFICATION SECTION 11151 FOR FRP SLUDGE PROTECTION SYSTEM, AND ITS SUPPORT SYSTEM, WEIRS AND SCUM PLATES (ALL SUPPLIED BY FRP FABRICATORS).

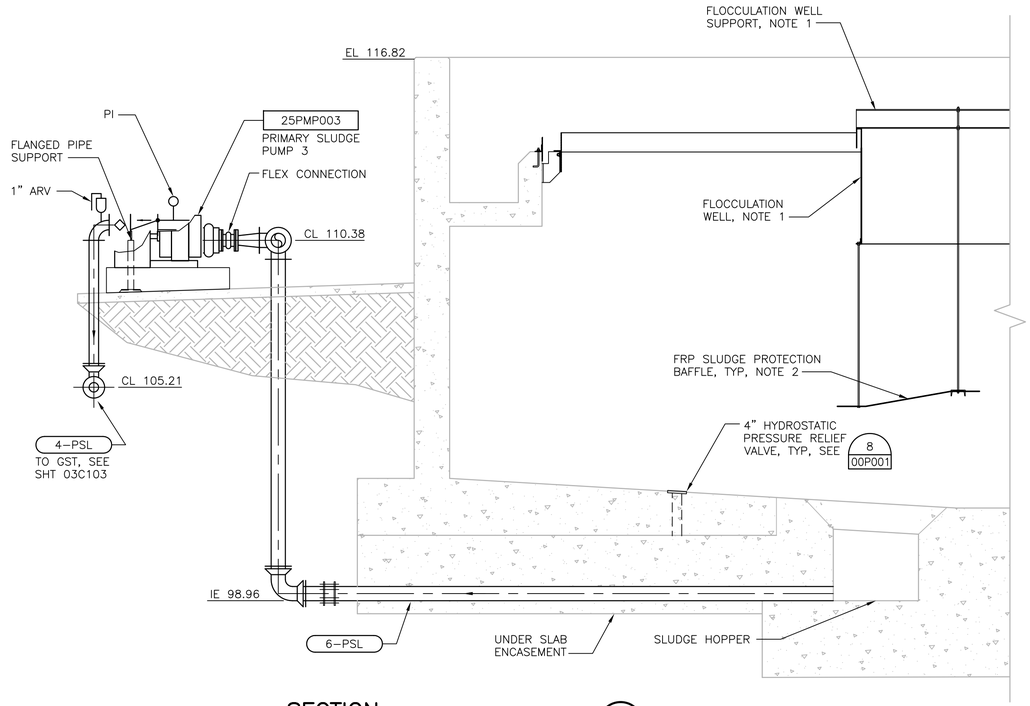


SECTION C 21P131
3/8" = 1'–0"

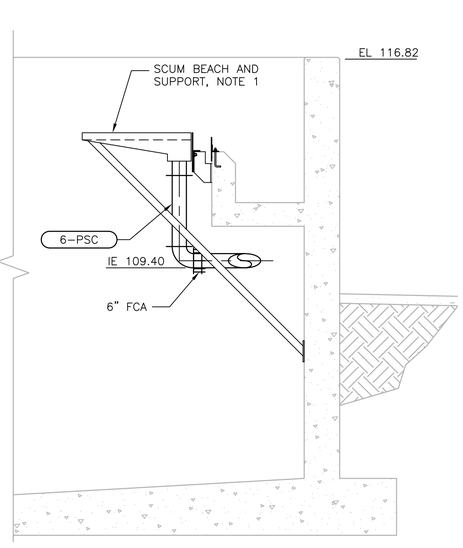


SECTION D 21P131
3/8" = 1'–0"

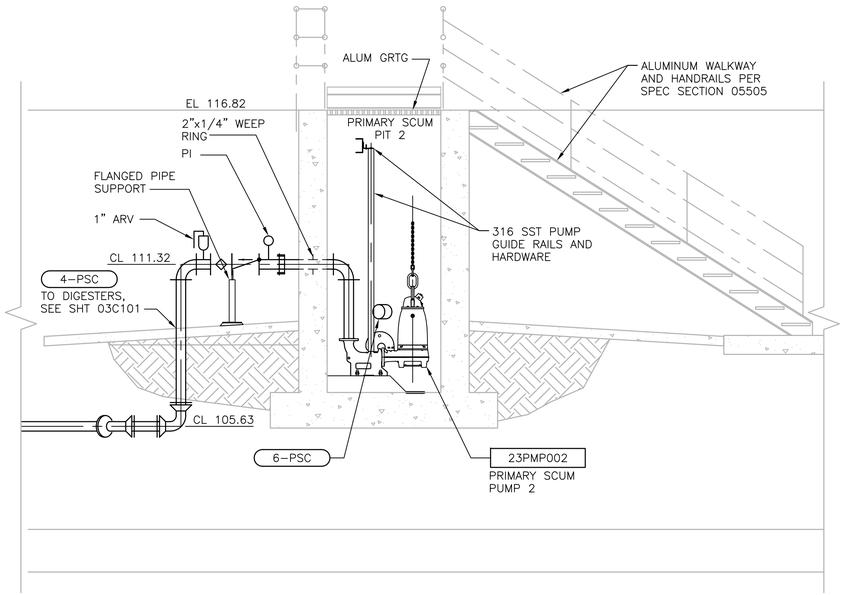


SECTION E 21P131
3/8" = 1'–0"

FILE: 215786–21P134.dwg
DATE: Oct 07, 2015–4:42:03am, rsnider

HDR Engineering, Inc.

| ISSUE | DATE | DESCRIPTION |
|---|---|---|
| | | |
| | | |
| | | |
| | | |
| | | |
| | | |
| A | JUNE 2015 | ISSUED FOR BID |

| | |
|---|---|
| PROJECT MANAGER | C. OLSON |
| | |
| DESIGNED | T. KONTONICKAS |
| DESIGNED | H. GERGES |
| CHECKED | C. OLSON |
| DRAWN | M. FOYLE |
| DATE | JUNE 30, 2015 |
| | |
| PROJECT NUMBER | 215786 |

REGISTERED PROFESSIONAL ENGINEER
THEODORE H. KONTONICKAS
NO. 29378
EXP. 06/30/17
MECHANICAL
STATE OF CALIFORNIA
06-30-15

CITY OF PINOLE CALIFORNIA 1903

PINOLE/HERCULES
WATER POLLUTION
CONTROL PLANT UPGRADE
CLIENT PN

**PROCESS**

**PRIMARY CLARIFIER NO 3**
**SECTIONS 3**

0 1" 2"

| | |
|---|---|
| FILENAME | 215786–21P134 |
| SCALE | AS NOTED |

SHEET **21P134**

NOTES:

1. FIELD VERIFY SIZE OF NEW GRATING. GRATING SHALL BE ALUMINUM.
2. PROVIDE FIXED 304 SS STRAIGHT WEIR IN EXISTING GATE SLOTS. MINIMUM THICKNESS TO MATCH EXISTING (1/2"). FIELD VERIFY ALL DIMENSIONS PRIOR TO FABRICATION SEAL EDGES AFTER INSTALLATION.
3. CONTRACTOR TO REMOVE AND DISPOSE OF GRIT FOUND IN BASINS. ASSUME NO LESS THAN 3 CUBIC YARDS.

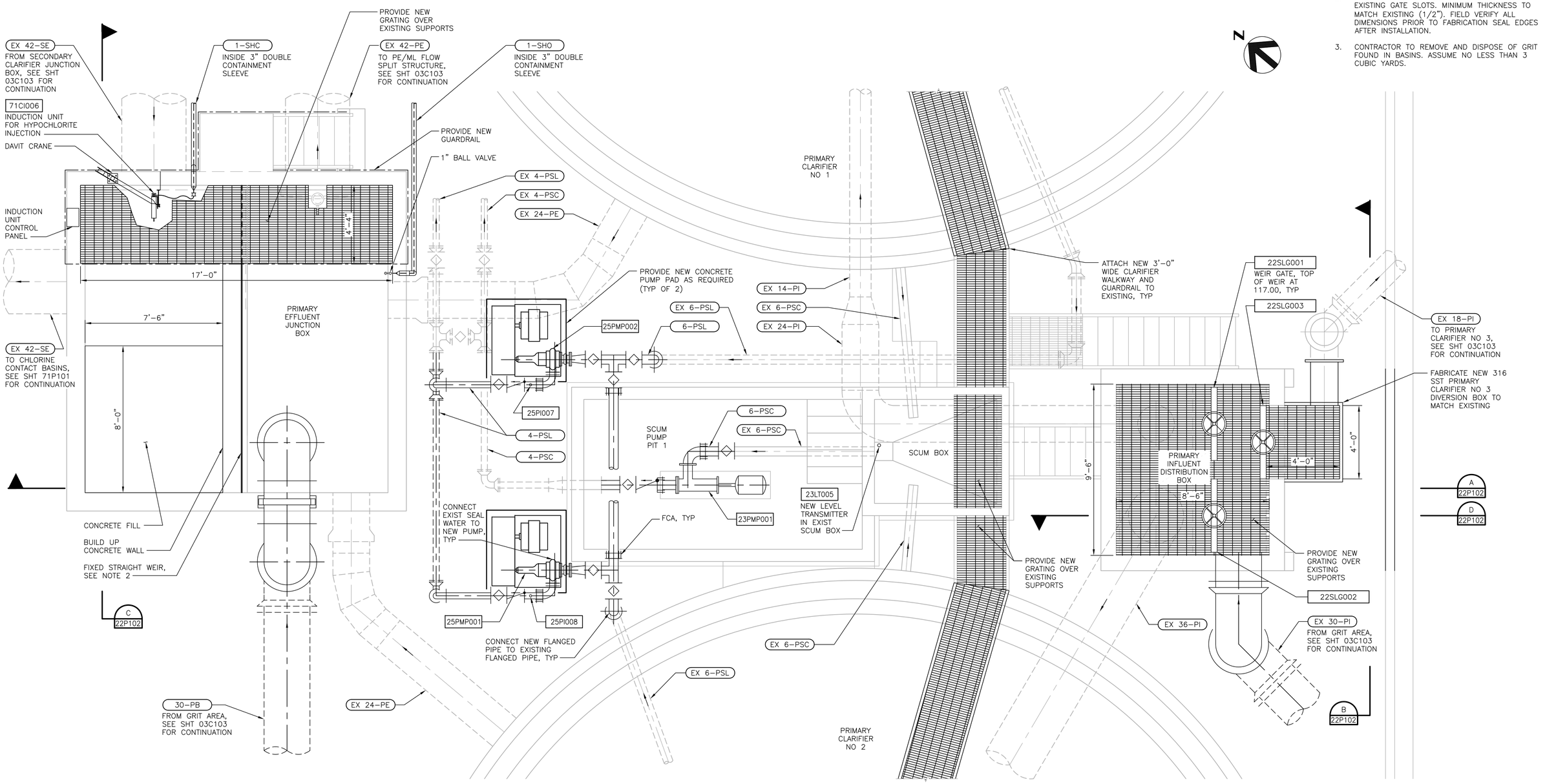


PLAN
3/8" = 1'–0"

FILE: 215786–22P101.dwg
DATE: Oct 07, 2015–4:42:22pm, ranider

HDR Engineering, Inc.

| ISSUE | DATE | DESCRIPTION |
|---|---|---|
| A | JUNE 2015 | ISSUED FOR BID |

| | |
|---|---|
| PROJECT MANAGER | C. OLSON |
| DESIGNED | T. KONTONICKAS |
| DESIGNED | |
| CHECKED | C. OLSON |
| DRAWN | M. FOYLE |
| DATE | JUNE 30, 2015 |
| PROJECT NUMBER | 215786 |

REGISTERED PROFESSIONAL ENGINEER
THEODORE H. KONTONICKAS
NO. 29378
EXP. 06/30/17
MECHANICAL
STATE OF CALIFORNIA
06-30-15

CITY OF PINOLE CALIFORNIA 1903

PINOLE/HERCULES
WATER POLLUTION
CONTROL PLANT UPGRADE
CLIENT PN

**PROCESS**

**EXISTING PRIMARY FLOW DISTRIBUTION MODIFICATIONS PLAN**

0 1" 2"

| | |
|---|---|
| FILENAME | 215786–22P101 |
| SCALE | AS NOTED |

SHEET
**22P101**

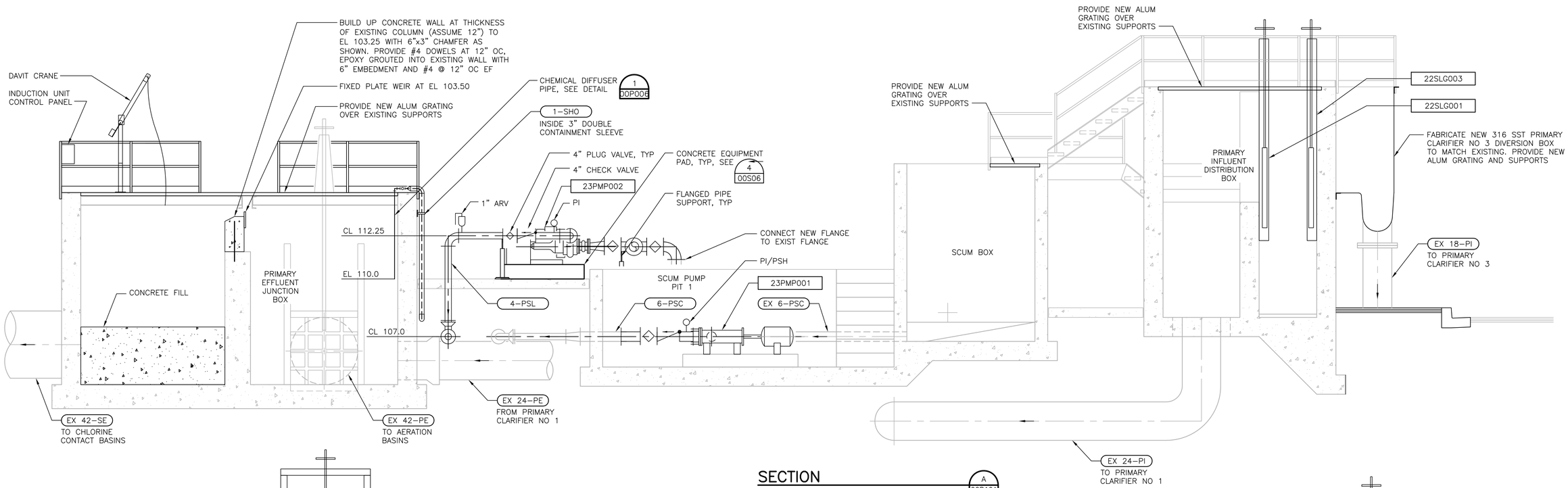


## SECTION
3/8" = 1'-0"
A 22P101

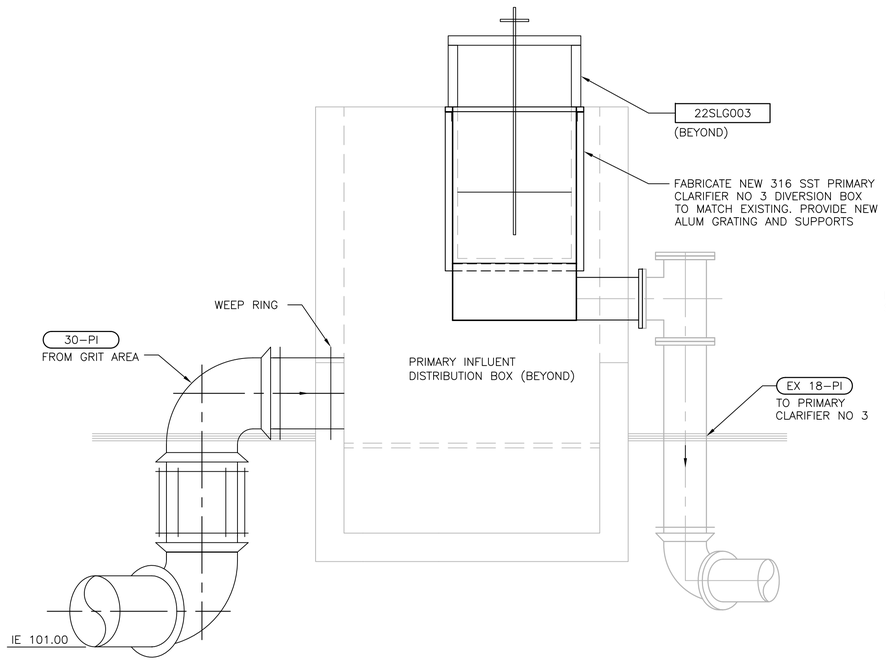


## SECTION
3/8" = 1'-0"
B 22P101

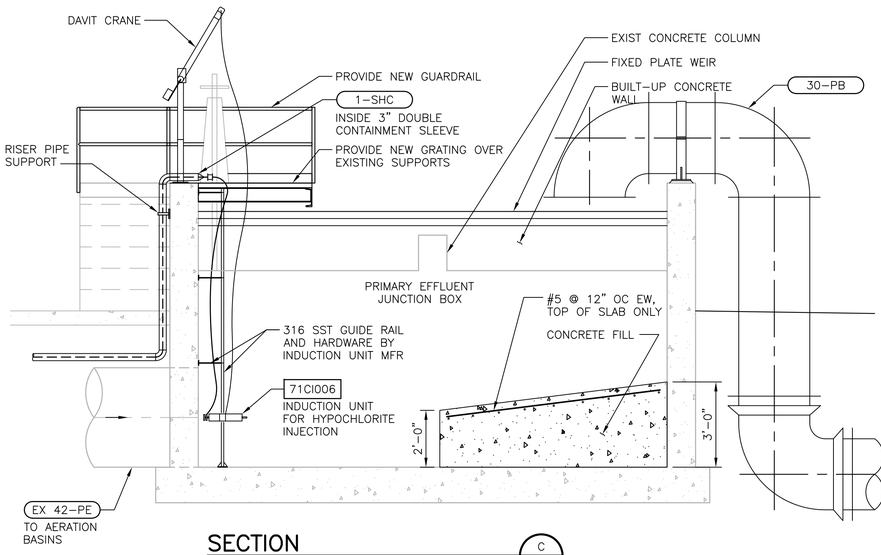


## SECTION
3/8" = 1'-0"
C 22P101

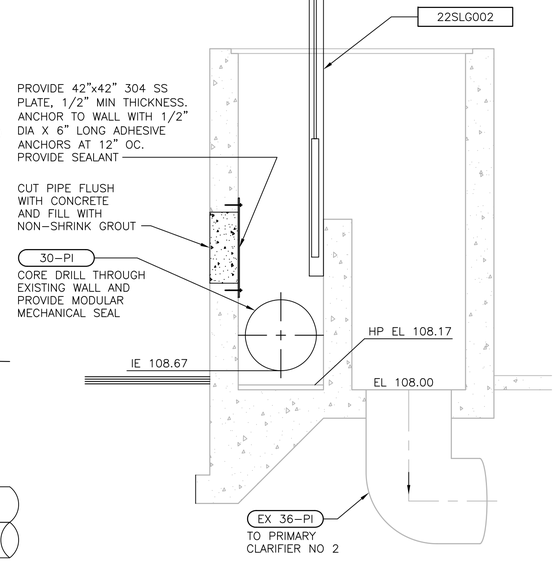


## SECTION
3/8" = 1'-0"
D 22P101

FILE: 215786-22P102.dwg
DATE: Oct 07, 2015-4:42:30am, rsnider

HDR Engineering, Inc.

| ISSUE | DATE | DESCRIPTION |
|---|---|---|
| A | JUNE 2015 | ISSUED FOR BID |

| | |
|---|---|
| PROJECT MANAGER | C. OLSON |
| DESIGNED | T. KONTONICKAS |
| DESIGNED | |
| CHECKED | C. OLSON |
| DRAWN | M. FOYLE |
| DATE | JUNE 30, 2015 |
| PROJECT NUMBER | 215786 |

REGISTERED PROFESSIONAL ENGINEER THEODORE H. KONTONICKAS NO. 29378 EXP. 06/30/17 MECHANICAL STATE OF CALIFORNIA 06-30-15

CITY OF PINOLE CALIFORNIA 1903

PINOLE/HERCULES WATER POLLUTION CONTROL PLANT UPGRADE CLIENT PN

**PROCESS**

**EXISTING PRIMARY FLOW DISTRIBUTION MODIFICATIONS SECTIONS**

0 1" 2"

| | |
|---|---|
| FILENAME | 215786-22P102 |
| SCALE | AS NOTED |

SHEET **22P102**

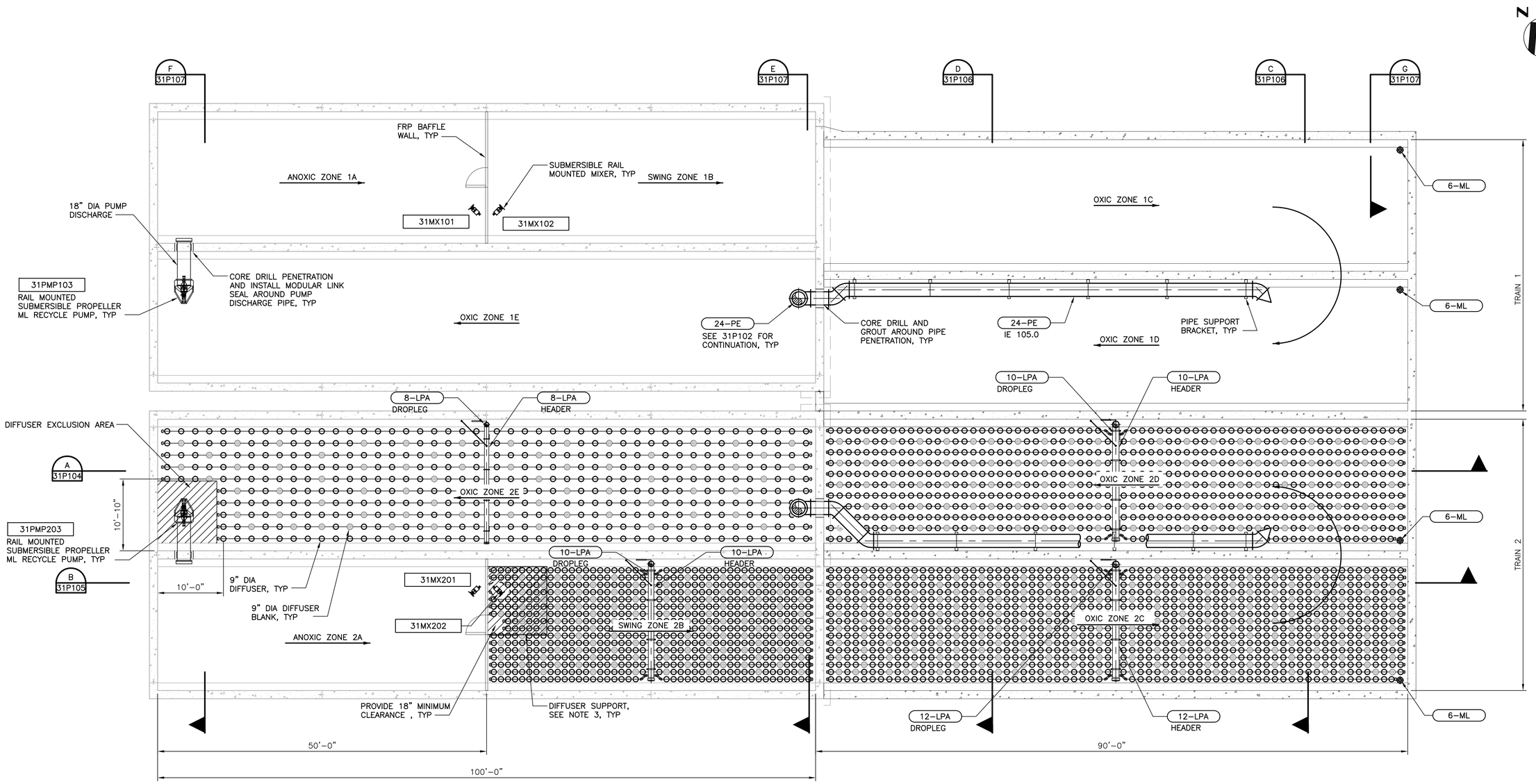


## PLAN

1/8"=1'-0"M

**NOTES:**

1. TRAIN 1 AIR DIFFUSER CONFIGURATION SYMMETRICAL.
2. FINAL DIFFUSER CONFIGURATION PER MANUFACTURER RECOMMENDATIONS.
3. IN DESIGNATED AREA, DIFFUSER MANUFACTURER TO DESIGN LPA MANIFOLD AND HEADER SUPPORTS FOR THRUST LOADS FROM OPERATION OF SUBMERSIBLE MIXER. MAXIMUM PIPE SUPPORT SPACING IN DESIGNATED AREA IS 4 FOOT ON CENTER.

FILE: 215786-31P101.dwg
DATE: Oct 07, 2015-4:45:23am, rsnider

HDR Engineering, Inc.

| ISSUE | DATE | DESCRIPTION |
|---|---|---|
| A | JUNE 2015 | ISSUED FOR BID |

| | |
|---|---|
| PROJECT MANAGER | C. OLSON |
| DESIGNED | T. KONTONICKAS |
| DESIGNED | T. KONTONICKAS |
| CHECKED | C. OLSON |
| DRAWN | B. DOWN |
| DATE | JUNE 30, 2015 |
| PROJECT NUMBER | 215786 |

REGISTERED PROFESSIONAL ENGINEER
CRAIG A. OLSON
NO. 39819
EXP. 12/31/15
CIVIL
STATE OF CALIFORNIA
06-30-15

CITY OF PINOLE CALIFORNIA 1903

PINOLE/HERCULES
WATER POLLUTION
CONTROL PLANT UPGRADE
CLIENT PN

**PROCESS**

**EXISTING AERATION BASINS LOWER LEVEL EXPANSION PLAN**

0 1" 2"

| | |
|---|---|
| FILENAME | 215786-31P101 |
| SCALE | AS NOTED |

SHEET
**31P101**

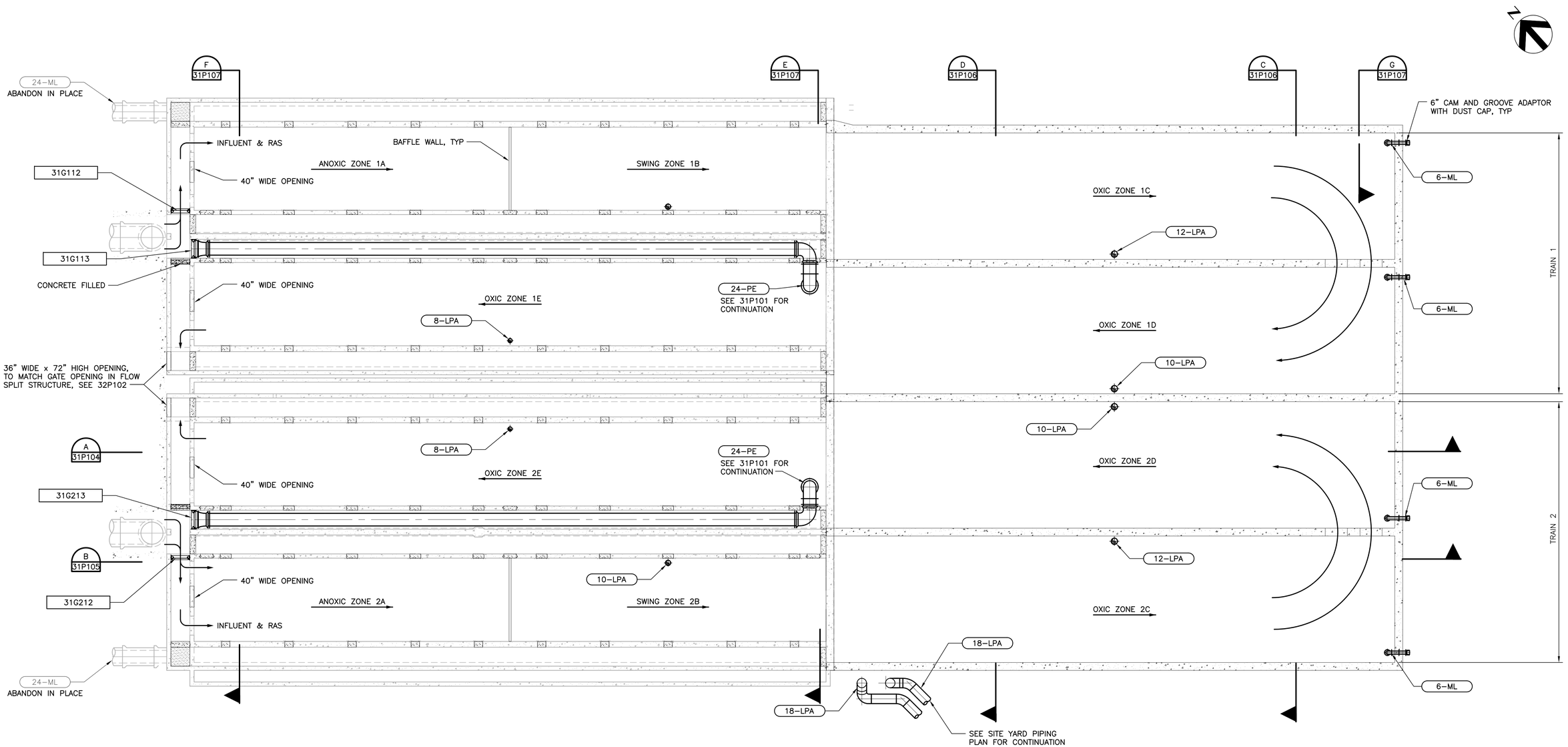


## PLAN
1/8" = 1'–0"

FILE: 215786–31P102.dwg
DATE: Oct 07, 2015–4:45:30am, rsnider

HDR Engineering, Inc.

| ISSUE | DATE | DESCRIPTION |
|---|---|---|
| A | JUNE 2015 | ISSUED FOR BID |

| | |
|---|---|
| PROJECT MANAGER | C. OLSON |
| DESIGNED | T. KONTONICKAS |
| DESIGNED | |
| CHECKED | C. OLSON |
| DRAWN | B.DOWN |
| DATE | JUNE 30, 2015 |
| PROJECT NUMBER | 215786 |

REGISTERED PROFESSIONAL ENGINEER
CRAIG A. OLSON
NO. 39819
EXP. 12/31/15
CIVIL
STATE OF CALIFORNIA

CITY OF PINOLE CALIFORNIA 1903

PINOLE/HERCULES
WATER POLLUTION
CONTROL PLANT UPGRADE
CLIENT PN

**PROCESS**

**EXISTING AERATION BASINS CHANNEL LEVEL EXPANSION PLAN**

0 1" 2"

| | |
|---|---|
| FILENAME | 215786–31P102 |
| SCALE | AS NOTED |

SHEET
**31P102**

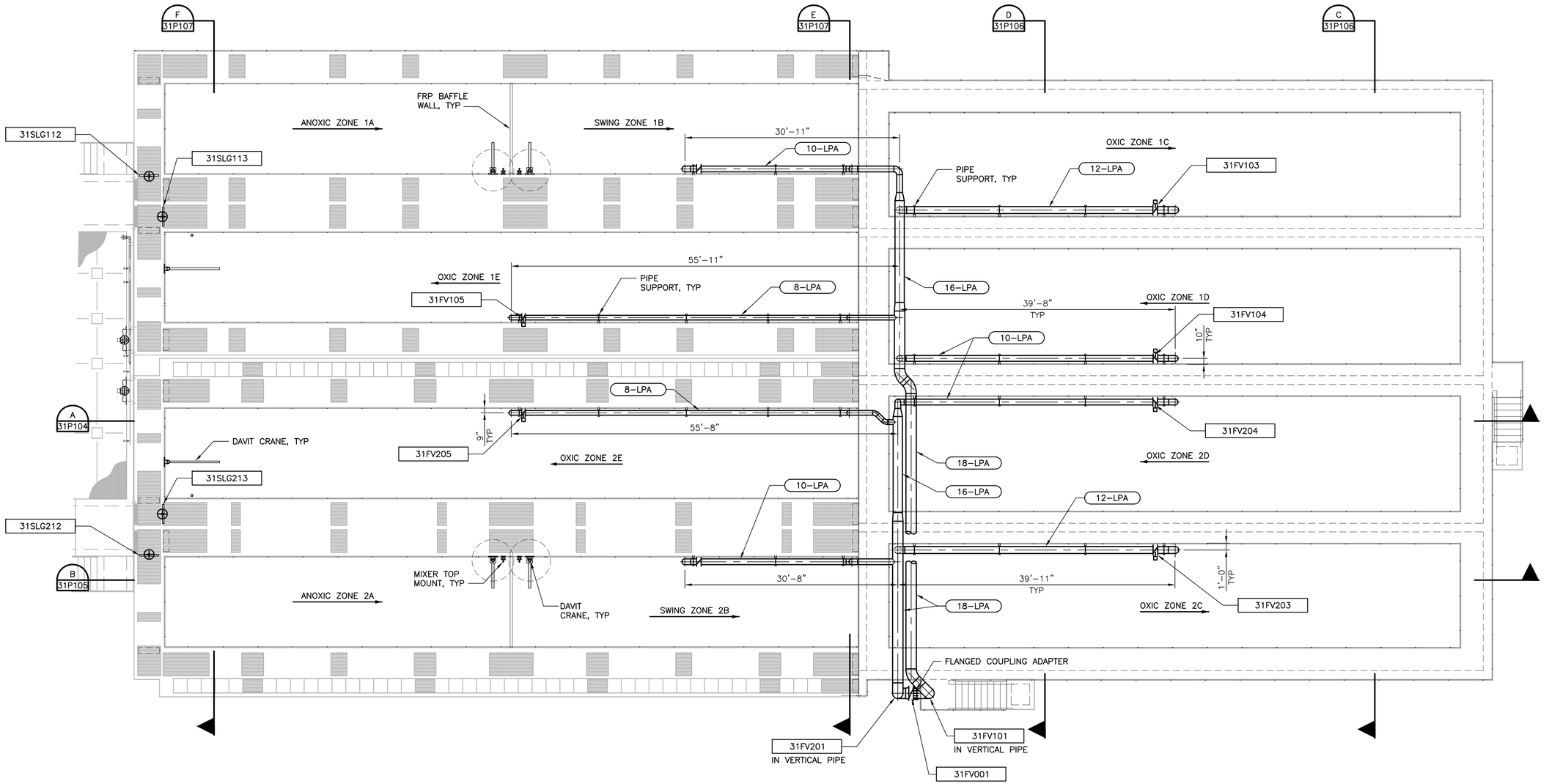


FILE: 215786-31P103.dwg
DATE: Oct 07, 2015-4:45:38pm, rsnider

HDR Engineering, Inc.

| ISSUE | DATE | DESCRIPTION |
|---|---|---|
| A | JUNE 2015 | ISSUED FOR BID |

| | |
|---|---|
| PROJECT MANAGER | C. OLSON |
| DESIGNED | T. KONTONICKAS |
| DESIGNED | |
| CHECKED | C. OLSON |
| DRAWN | B. DOWN |
| DATE | JUNE 30, 2015 |
| PROJECT NUMBER | 215786 |

REGISTERED PROFESSIONAL ENGINEER
CRAIG A. OLSON
NO. 39819
EXP. 12/31/15
CIVIL
STATE OF CALIFORNIA
06-30-15

CITY OF PINOLE CALIFORNIA 1903

PINOLE/HERCULES
WATER POLLUTION
CONTROL PLANT UPGRADE
CLIENT PN

**PROCESS**

**EXISTING AERATION BASINS DECK LEVEL EXPANSION PLAN**

0 1" 2"

| | |
|---|---|
| FILENAME | 215786-31P103 |
| SCALE | AS NOTED |

SHEET
**31P103**

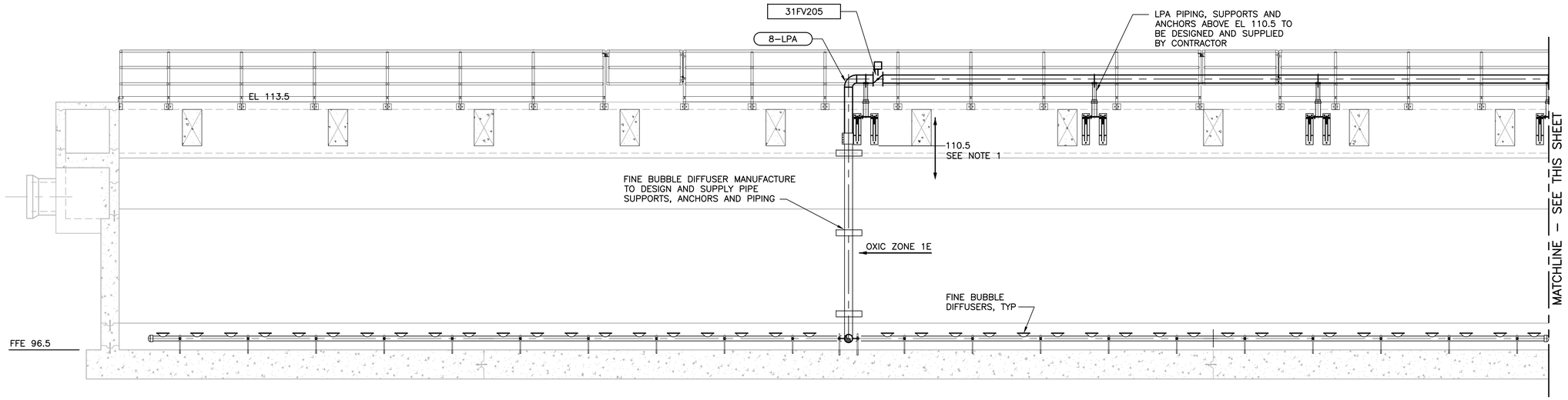


SECTION
1/4" = 1'-0"
A 31P101

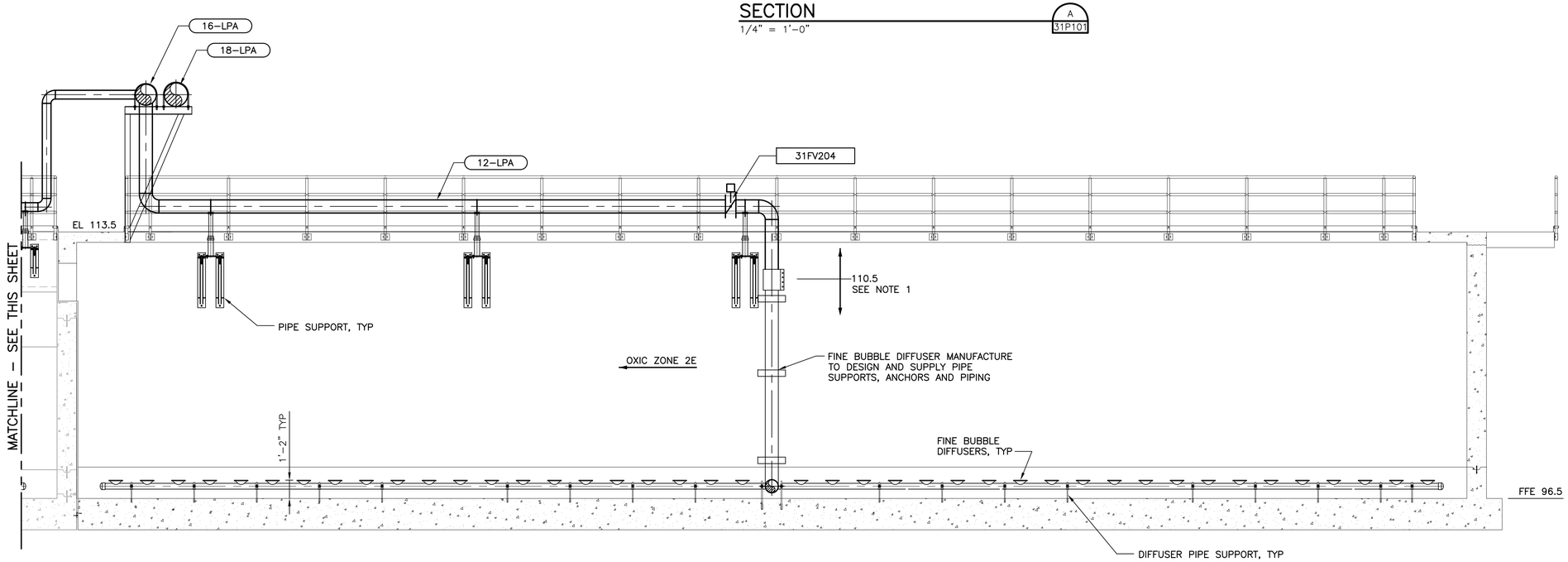


SECTION
1/4" = 1'-0"
A 31P101

FILE: 215786-31P104.dwg
DATE: Oct 07, 2015-4:45:48am, ranider

HDR Engineering, Inc.

| ISSUE | DATE | DESCRIPTION |
|---|---|---|
| A | JUNE 2015 | ISSUED FOR BID |

| | |
|---|---|
| PROJECT MANAGER | C. OLSON |
| DESIGNED | T. KONTONICKAS |
| DESIGNED | |
| CHECKED | C. OLSON |
| DRAWN | B. DOWN |
| DATE | JUNE 30, 2015 |
| PROJECT NUMBER | 215786 |

REGISTERED PROFESSIONAL ENGINEER
CRAIG A. OLSON
NO. 39819
EXP. 12/31/15
CIVIL
STATE OF CALIFORNIA
06-30-15

CITY OF PINOLE CALIFORNIA 1903

PINOLE/HERCULES
WATER POLLUTION
CONTROL PLANT UPGRADE
CLIENT PN

**PROCESS**

**EXISTING AERATION BASINS EXPANSION SECTIONS**

0 1" 2"

| | |
|---|---|
| FILENAME | 215786-31P104 |
| SCALE | AS NOTED |

SHEET
**31P104**

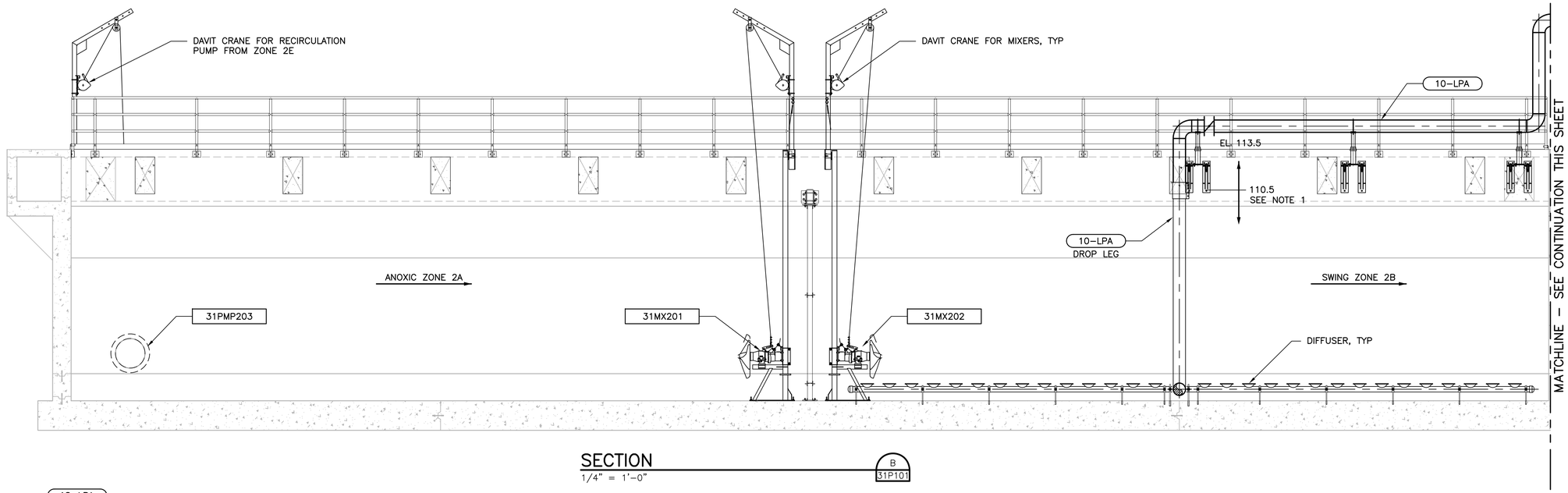


SECTION
1/4" = 1'-0"
B
31P101

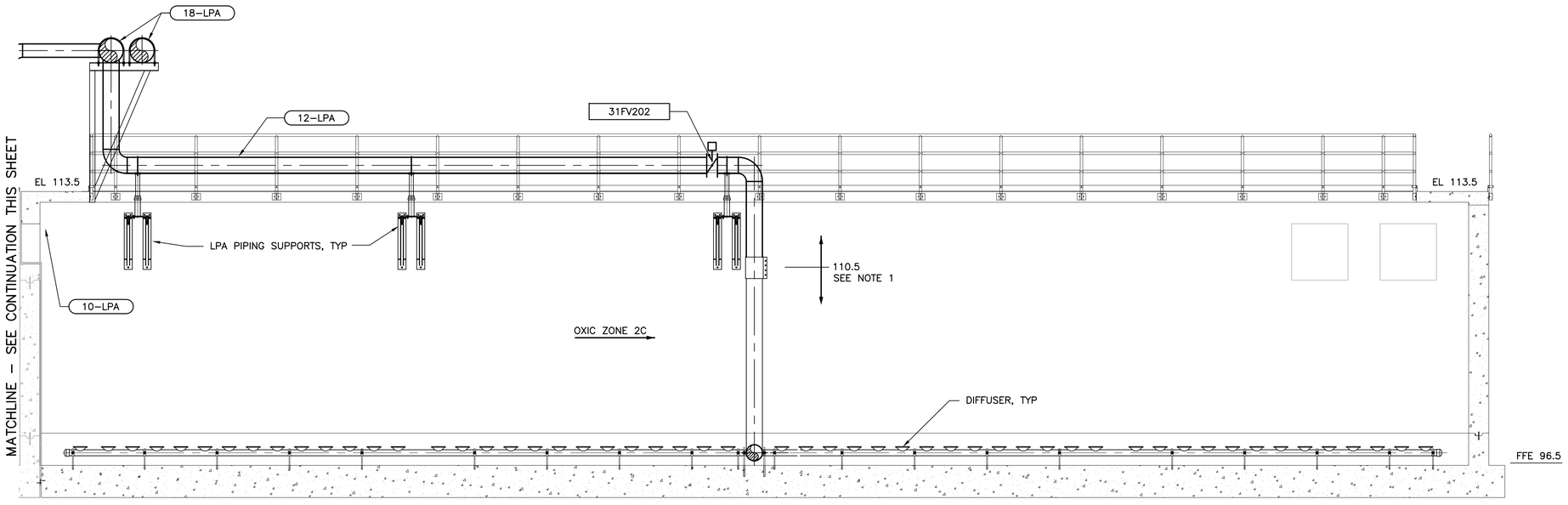


SECTION
1/4" = 1'-0"
B
31P101

NOTES:
1. ALL LPA PIPING, SUPPORTS AND ANCHORS BELOW EL. 110.5 TO BE DESIGNED BY FINE BUBBLE DIFFUSER MANUFACTURER.

FILE: 215786–31P105.dwg
DATE: Oct 07, 2015–4:45:59am, rsnider

HDR Engineering, Inc.

| ISSUE | DATE | DESCRIPTION |
|---|---|---|
| A | JUNE 2015 | ISSUED FOR BID |

| | |
|---|---|
| PROJECT MANAGER | C. OLSON |
| DESIGNED | T. KONTONICKAS |
| DESIGNED | |
| CHECKED | C. OLSON |
| DRAWN | B. DOWN |
| DATE | JUNE 30, 2015 |
| PROJECT NUMBER | 215786 |

REGISTERED PROFESSIONAL ENGINEER
CRAIG A. OLSON
NO. 39819
EXP. 12/31/15
CIVIL
STATE OF CALIFORNIA
06-30-15

CITY OF PINOLE CALIFORNIA 1903

PINOLE/HERCULES
WATER POLLUTION
CONTROL PLANT UPGRADE
CLIENT PN

**PROCESS**

**EXISTING AERATION BASINS EXPANSION SECTIONS**

0 1" 2"

| | |
|---|---|
| FILENAME | 215786–31P105 |
| SCALE | AS NOTED |

SHEET
**31P105**

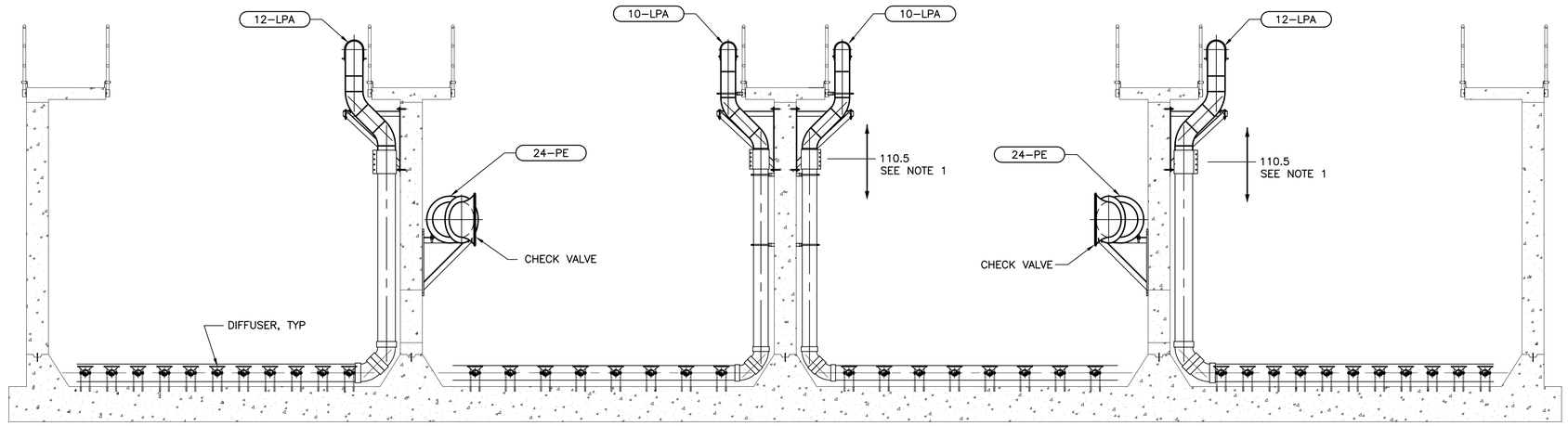


## SECTION
1/4" = 1'–0"

C
31P101

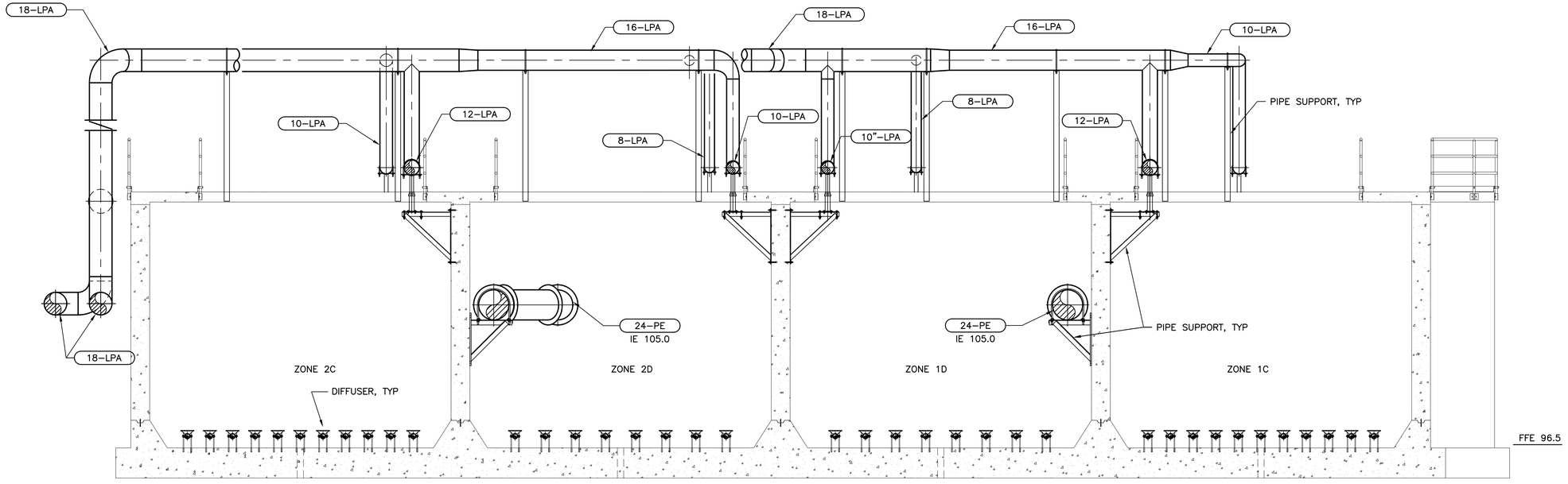


NOTES:
1. ALL LPA PIPING, SUPPORTS AND ANCHORS BELOW ELEVATION 110.5 TO BE DESIGNED BY FINE BUBBLE DIFFUSER MANUFACTURER.

## SECTION
1/4" = 1'–0"

D
31P101

FILE: 215786–31P106.dwg
DATE: Oct 07, 2015–4:46:09am, rsnider

HDR Engineering, Inc.

| ISSUE | DATE | DESCRIPTION |
|---|---|---|
| A | JUNE 2015 | ISSUED FOR BID |

| | |
|---|---|
| PROJECT MANAGER | C. OLSON |
| DESIGNED | T. KONTONICKAS |
| DESIGNED | ---- |
| CHECKED | C. OLSON |
| DRAWN | B. DOWN |
| DATE | JUNE 30, 2015 |
| PROJECT NUMBER | 215786 |

REGISTERED PROFESSIONAL ENGINEER
CRAIG A. OLSON
NO. 39819
EXP. 12/31/15
CIVIL
STATE OF CALIFORNIA
06-30-15

CITY OF PINOLE CALIFORNIA 1903

PINOLE/HERCULES
WATER POLLUTION
CONTROL PLANT UPGRADE
CLIENT PN

# PROCESS
# EXISTING AERATION BASINS
# EXPANSION SECTIONS

0 1" 2"

| | |
|---|---|
| FILENAME | 215786–31P106 |
| SCALE | AS NOTED |

SHEET
**31P106**

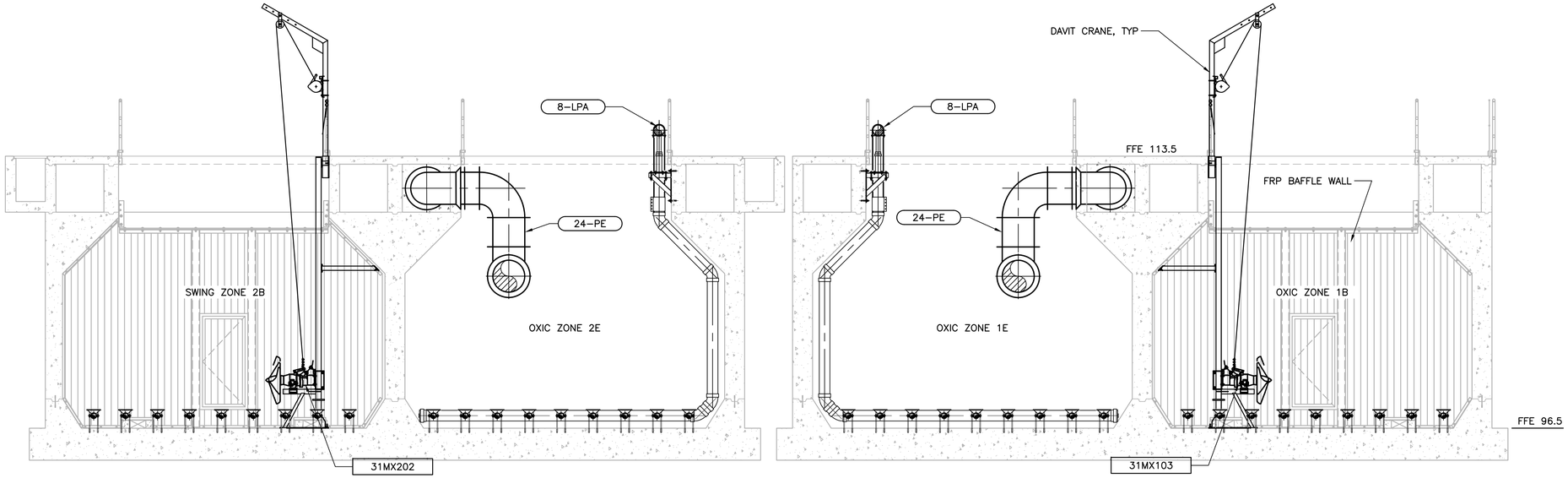


## SECTION
1/4" = 1'-0"

E
31P101

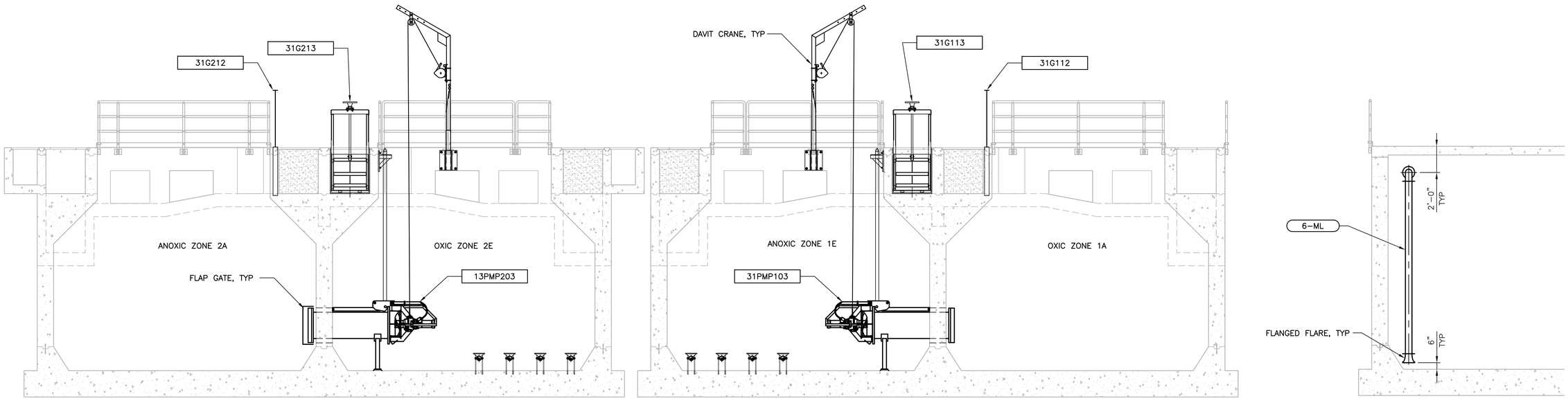


## SECTION
1/4" = 1'-0"

F
31P101

FILE: 215786-31P107.dwg
DATE: Oct 07, 2015-4:46:20am, rsnider

HDR Engineering, Inc.

| ISSUE | DATE | DESCRIPTION |
|---|---|---|
| A | JUNE 2015 | ISSUED FOR BID |

| | |
|---|---|
| PROJECT MANAGER | C. OLSON |
| | |
| DESIGNED | T. KONTONICKAS |
| DESIGNED | |
| CHECKED | C. OLSON |
| DRAWN | B. DOWN |
| DATE | JUNE 30, 2015 |
| | |
| PROJECT NUMBER | 215786 |

REGISTERED PROFESSIONAL ENGINEER
CRAIG A. OLSON
NO. 39819
EXP. 12/31/15
CIVIL
STATE OF CALIFORNIA
06-30-15

CITY OF PINOLE CALIFORNIA 1903

PINOLE/HERCULES
WATER POLLUTION
CONTROL PLANT UPGRADE
CLIENT PN

**PROCESS**

**EXISTING AERATION BASINS EXPANSION SECTIONS**

0 1" 2"

| | |
|---|---|
| FILENAME | 215786-31P107 |
| SCALE | AS NOTED |

SHEET
**31P107**

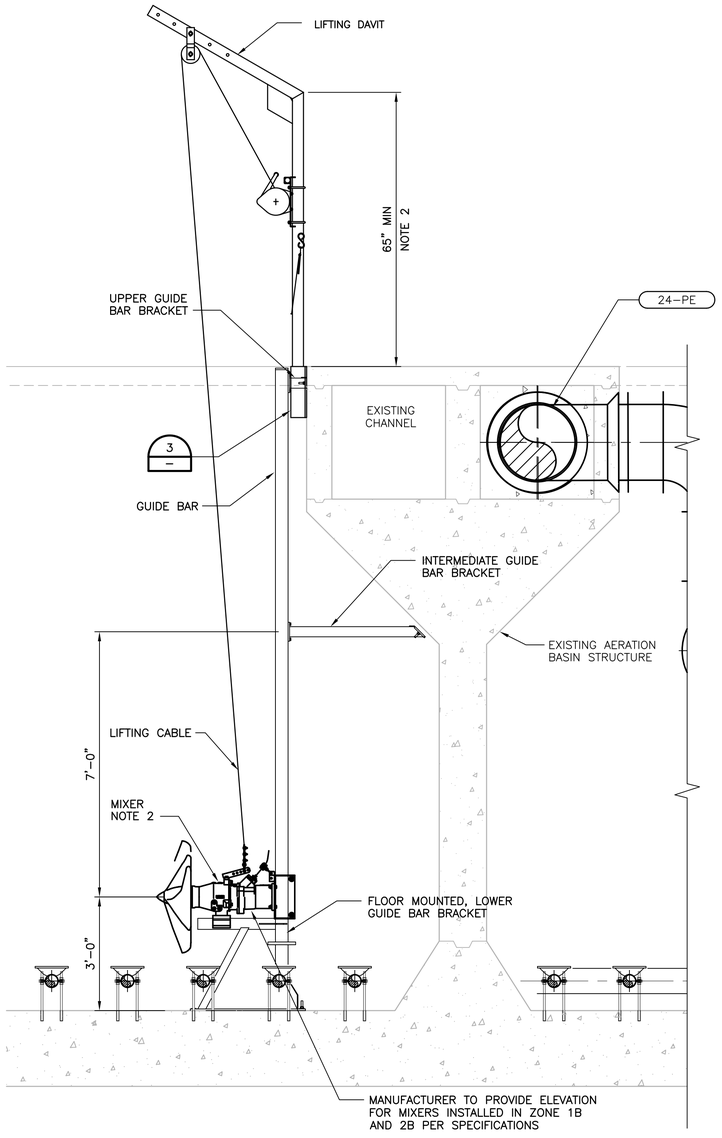


## MIXER DETAIL

1/2" = 1'-0"

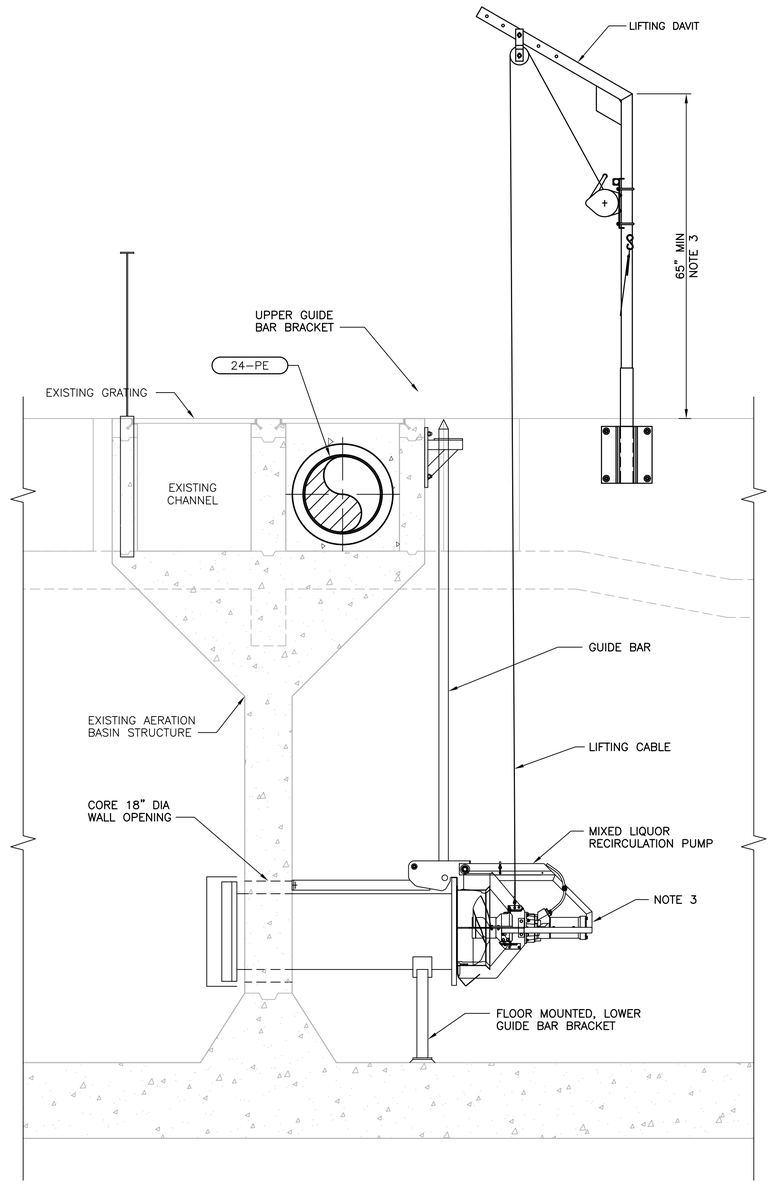


## RECIRCULATION PUMP DETAIL

1/2" = 1'-0"

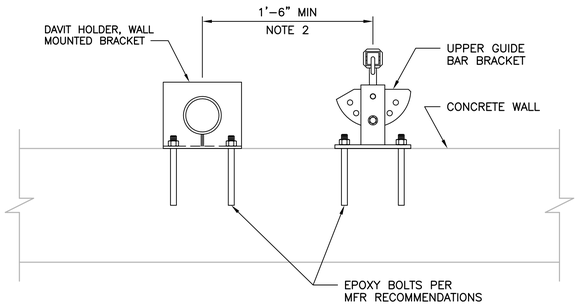


LIFTING DAVIT SOCKET DETAIL FOR MIXERS IN ANOXIC ZONES 1A, 1B, 2A AND 2C.

## BRACKET DETAIL

1/2" = 1'-0"

NOTES:

1. MOUNT ALL BRACKETS PER MANUFACTURERS RECOMMENDATION.
2. DIMENSIONS TO BE DETERMINED PER FINAL MIXER SELECTION AND MANUFACTURERS RECOMMENDATION. MIXER INSTALLATION ELEVATION TO BE DETERMINED BY MANUFACTURER.
3. DIMENSIONS TO BE DETERMINED PER FINAL RECIRCULATION PUMP SELECTION AND MANUFACTURERS RECOMMENDATION.

FILE: 215786-31P108.dwg
DATE: Oct 07, 2015--4:46:29am, rsnider

HDR Engineering, Inc.

| ISSUE | DATE | DESCRIPTION |
|---|---|---|
| A | JUNE 2015 | ISSUED FOR BID |

| | |
|---|---|
| PROJECT MANAGER | C. OLSON |
| DESIGNED | M. RAMANATHAN |
| DESIGNED | |
| CHECKED | C. OLSON |
| DRAWN | B. DOWN |
| DATE | JUNE 30, 2015 |
| PROJECT NUMBER | 215786 |

REGISTERED PROFESSIONAL ENGINEER
CRAIG A. OLSON
NO. 39819
EXP. 12/31/15
CIVIL
STATE OF CALIFORNIA
06-30-15

CITY OF PINOLE CALIFORNIA 1903

PINOLE/HERCULES
WATER POLLUTION
CONTROL PLANT UPGRADE
CLIENT PN

**PROCESS**
**EXISTING AERATION BASINS EXPANSION**
**SECTIONS AND DETAILS**

0 1" 2"

| | |
|---|---|
| FILENAME | 215786-31P108 |
| SCALE | AS NOTED |

SHEET **31P108**

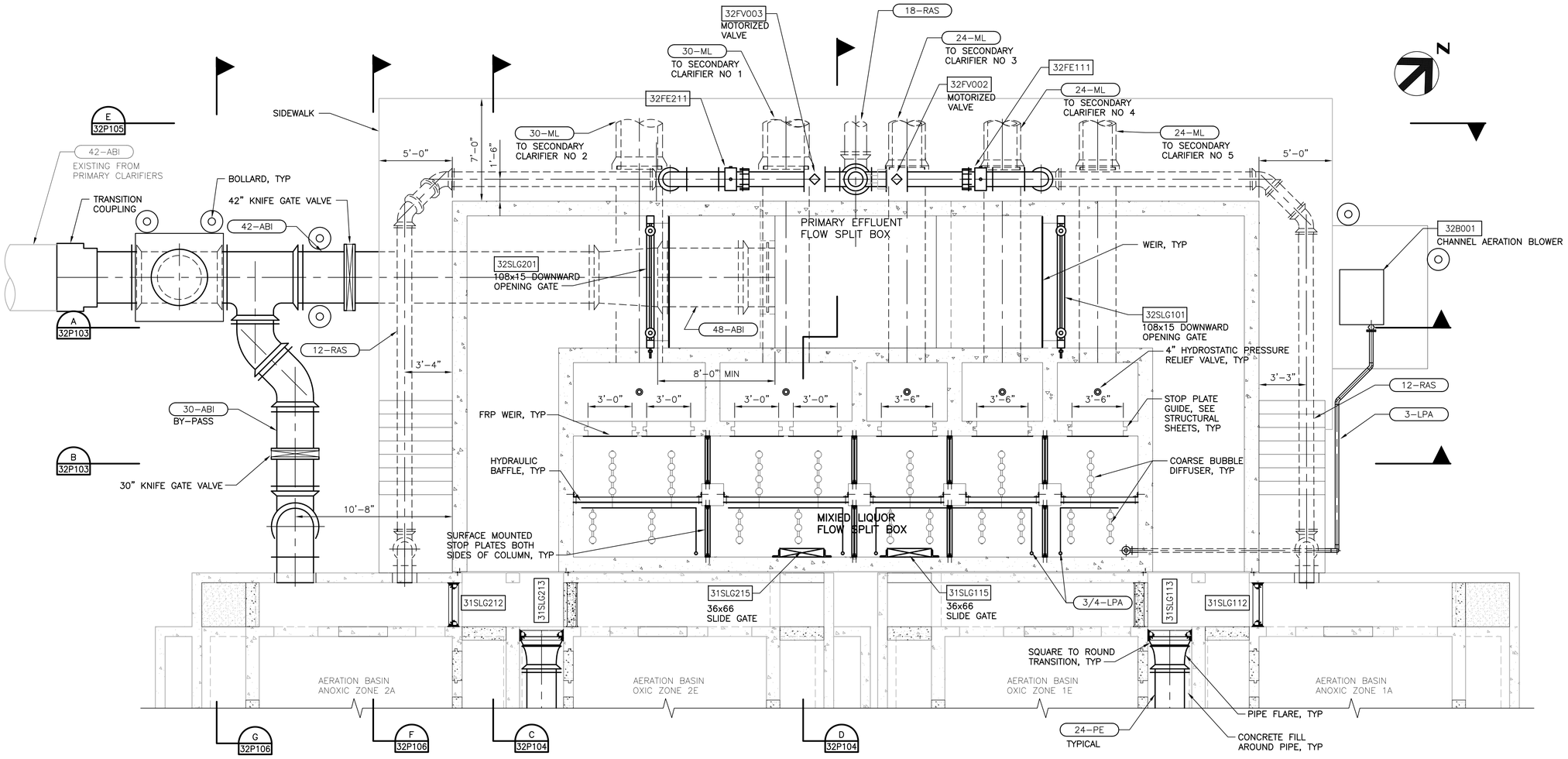


## SECTIONAL PLAN AT EL 112.0

1/4" = 1'-0"

FILE: 215786-32P101.dwg
DATE: Oct 07, 2015-4:46:55am, rsnider

HDR Engineering, Inc.

| ISSUE | DATE | DESCRIPTION |
|---|---|---|
| A | JUNE 2015 | ISSUED FOR BID |

| | |
|---|---|
| PROJECT MANAGER | C. OLSON |
| DESIGNED | T. KONTONICKAS |
| DESIGNED | |
| CHECKED | C. OLSON |
| DRAWN | B.DOWN |
| DATE | JUNE 30, 2015 |
| PROJECT NUMBER | 215786 |

REGISTERED PROFESSIONAL ENGINEER
CRAIG A. OLSON
NO. 39819
EXP. 12/31/15
CIVIL
STATE OF CALIFORNIA
06-30-15

CITY OF PINOLE CALIFORNIA 1903

PINOLE/HERCULES
WATER POLLUTION
CONTROL PLANT UPGRADE
CLIENT PN

**PROCESS**
**PRIMARY EFFLUENT AND MIXED LIQUOR FLOW SPLIT BOX**
**SECTIONAL PLAN AT EL 112.0**

0 1" 2"

| | |
|---|---|
| FILENAME | 215786-32P101 |
| SCALE | AS NOTED |

SHEET
**32P101**

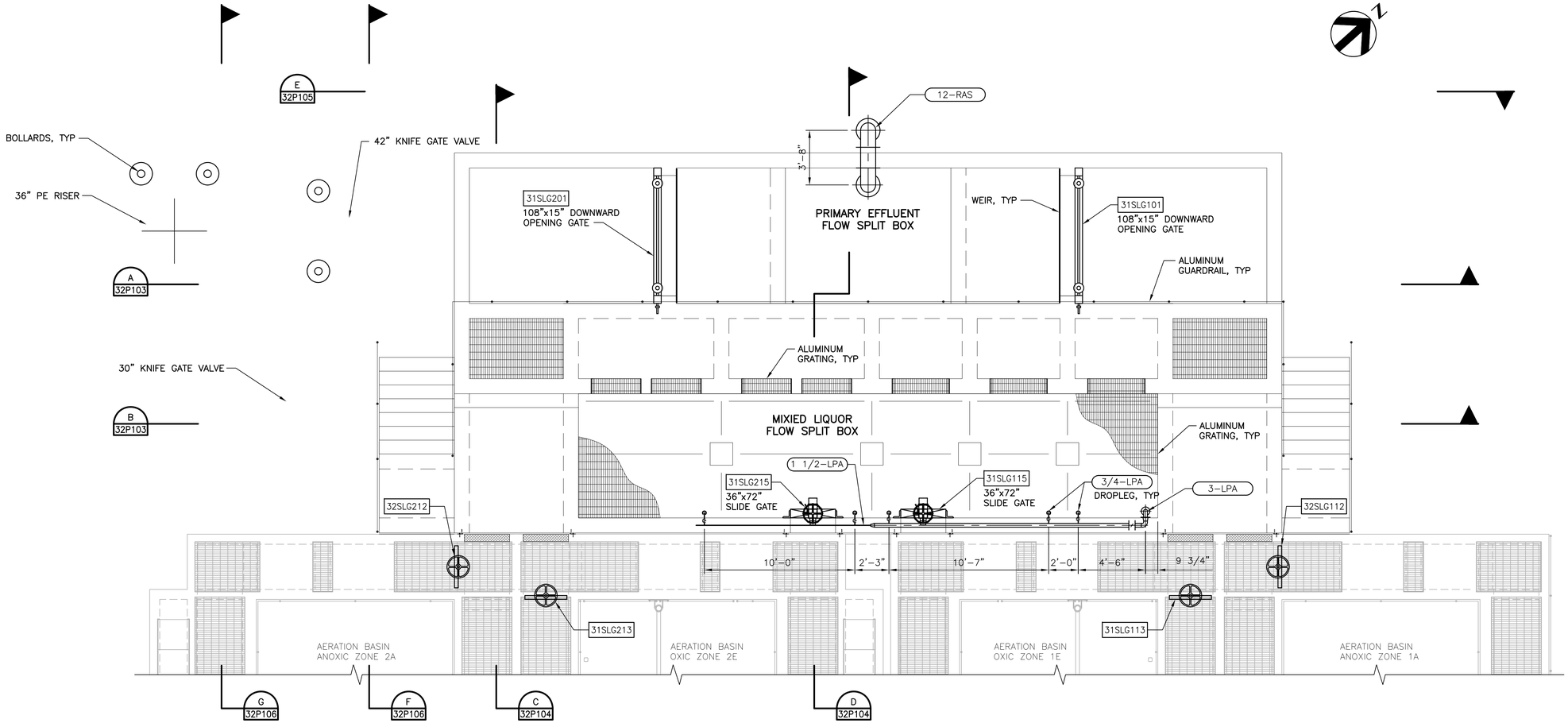


## DECK PLAN

1/4" = 1'-0"

FILE: 215786-32P102.dwg
DATE: Oct 07, 2015-4:47:03am, rsnider

HDR Engineering, Inc.

| ISSUE | DATE | DESCRIPTION |
|---|---|---|
| A | JUNE 2015 | ISSUED FOR BID |

| | |
|---|---|
| PROJECT MANAGER | C. OLSON |
| | |
| DESIGNED | T. KONTONICKAS |
| DESIGNED | ---- |
| CHECKED | C. OLSON |
| DRAWN | B. DOWN |
| DATE | JUNE 30, 2015 |
| | |
| PROJECT NUMBER | 215786 |

REGISTERED PROFESSIONAL ENGINEER
CRAIG A. OLSON
NO. 39819
EXP. 12/31/15
CIVIL
STATE OF CALIFORNIA

CITY OF PINOLE CALIFORNIA 1903

PINOLE/HERCULES
WATER POLLUTION
CONTROL PLANT UPGRADE
CLIENT PN

**PROCESS**
**PRIMARY EFFLUENT AND MIXED LIQUOR**
**FLOW SPLIT BOX**
**DECK PLAN**

0 1" 2"

| | |
|---|---|
| FILENAME | 215786-32P102 |
| SCALE | AS NOTED |

SHEET
**32P102**

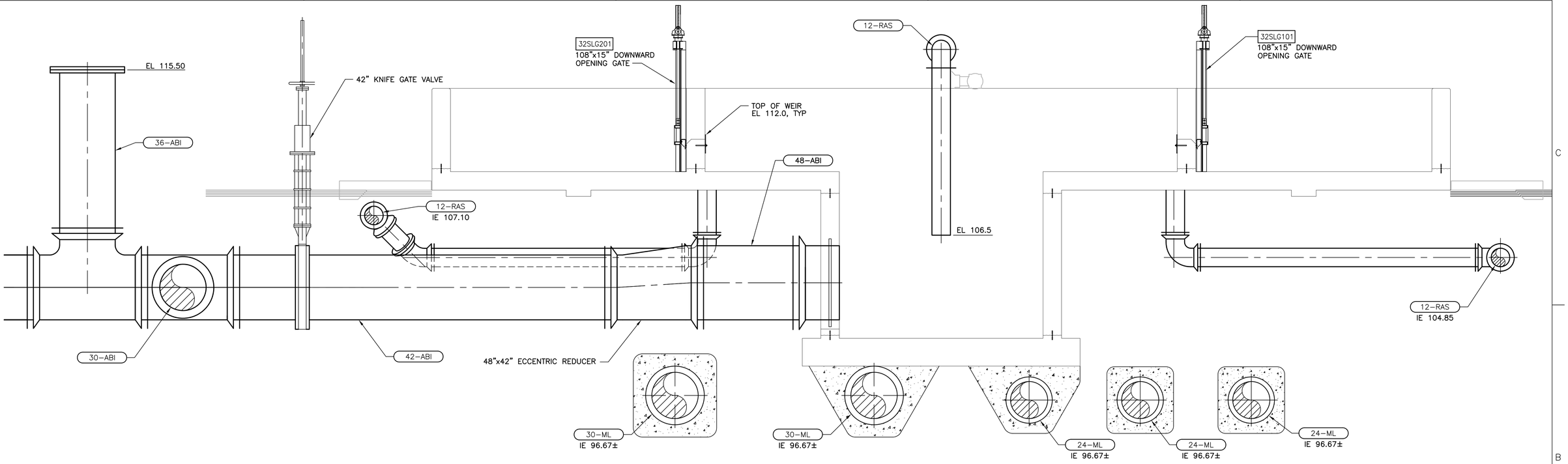


## SECTION
3/8" = 1'-0"

A 32P101

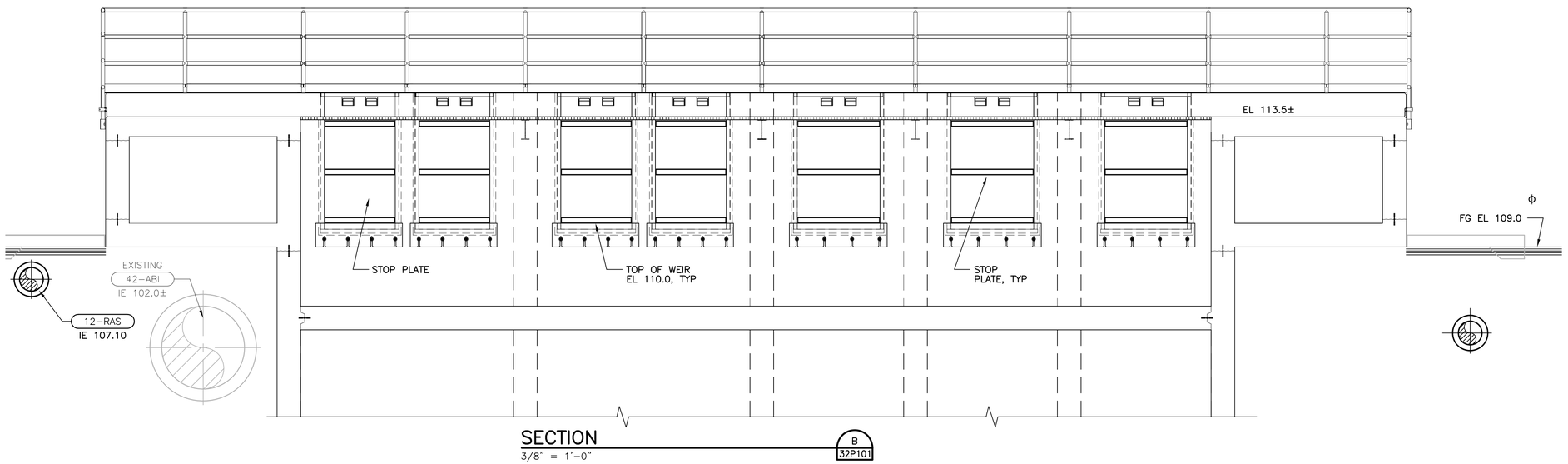


## SECTION
3/8" = 1'-0"

B 32P101

HDR Engineering, Inc.

| ISSUE | DATE | DESCRIPTION |
|---|---|---|
| A | JUNE 2015 | ISSUED FOR BID |

| | |
|---|---|
| PROJECT MANAGER | C. OLSON |
| DESIGNED | T. KONTONICKAS |
| DESIGNED | |
| CHECKED | C. OLSON |
| DRAWN | B. DOWN |
| DATE | JUNE 30, 2015 |
| PROJECT NUMBER | 215786 |

REGISTERED PROFESSIONAL ENGINEER
CRAIG A. OLSON
NO. 39819
EXP. 12/31/15
CIVIL
STATE OF CALIFORNIA
06-30-15

CITY OF PINOLE CALIFORNIA 1903

PINOLE/HERCULES
WATER POLLUTION
CONTROL PLANT UPGRADE
CLIENT PN

**PROCESS**
**PRIMARY EFFLUENT AND MIXED LIQUOR**
**FLOW SPLIT BOX SECTIONS**

0 1" 2"

| | |
|---|---|
| FILENAME | 215786–32P103 |
| SCALE | AS NOTED |

SHEET **32P103**

FILE: 215786–32P103.dwg
DATE: Oct 07, 2015–4:47:10am, rsnider

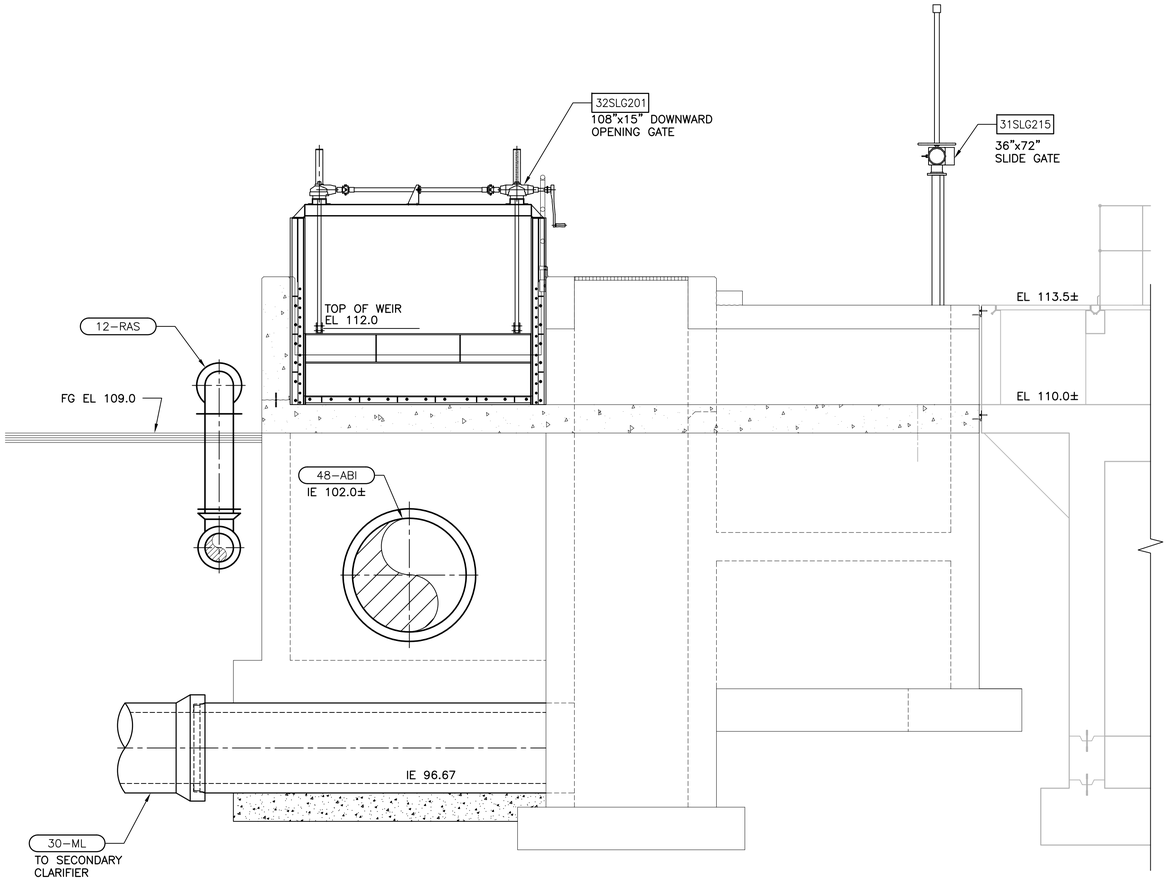


SECTION
3/8" = 1'-0"
C 32P101

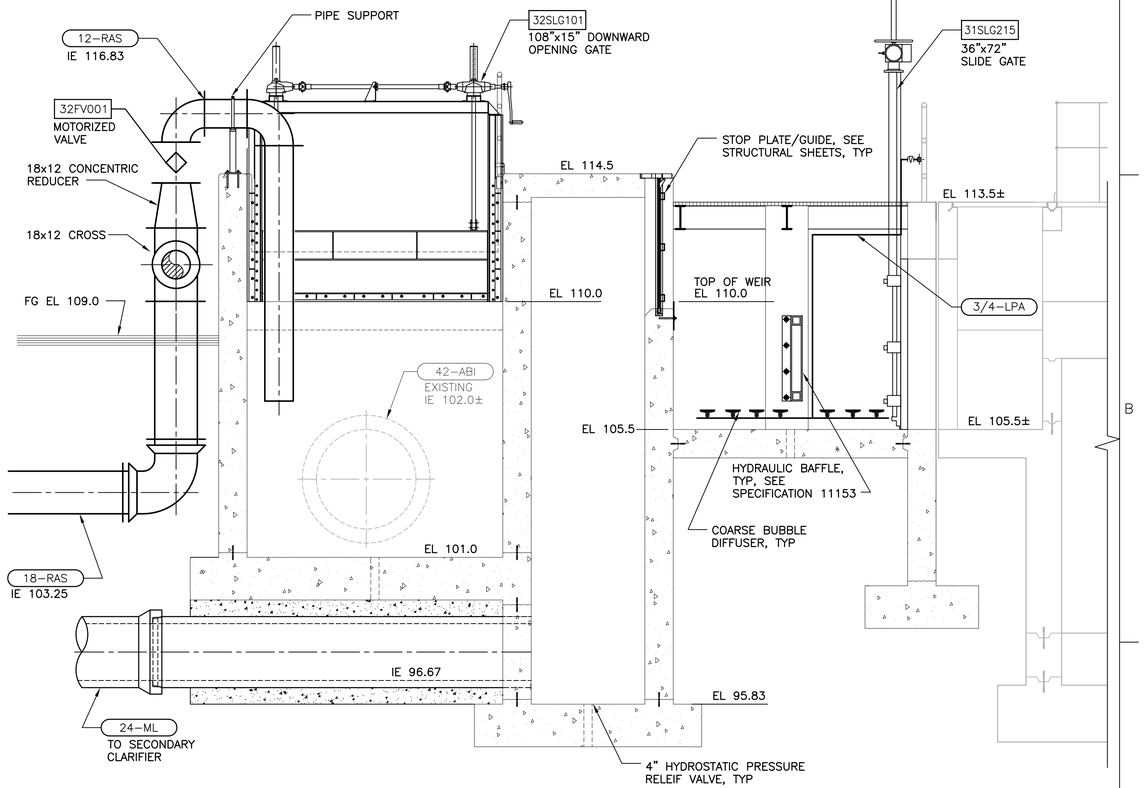


SECTION
3/8" = 1'-0"
D 32P101

FILE: 215786-32P104.dwg
DATE: Oct 07, 2015-4:47:18pm, rsnider

HDR Engineering, Inc.

| ISSUE | DATE | DESCRIPTION |
|---|---|---|
| A | JUNE 2015 | ISSUED FOR BID |

| | |
|---|---|
| PROJECT MANAGER | C. OLSON |
| DESIGNED | T. KONTONICKAS |
| DESIGNED | |
| CHECKED | C. OLSON |
| DRAWN | B. DOWN |
| DATE | JUNE 30, 2015 |
| PROJECT NUMBER | 215786 |

REGISTERED PROFESSIONAL ENGINEER
CRAIG A. OLSON
NO. 39819
EXP. 12/31/15
CIVIL
STATE OF CALIFORNIA
06-30-15

CITY OF PINOLE CALIFORNIA 1903

PINOLE/HERCULES
WATER POLLUTION
CONTROL PLANT UPGRADE
CLIENT PN

# PROCESS
# PRIMARY EFFLUENT AND MIXED LIQUOR FLOW SPLIT BOX SECTIONS

0 1" 2"

| | |
|---|---|
| FILENAME | 215786-32P104 |
| SCALE | AS NOTED |

SHEET
**32P104**

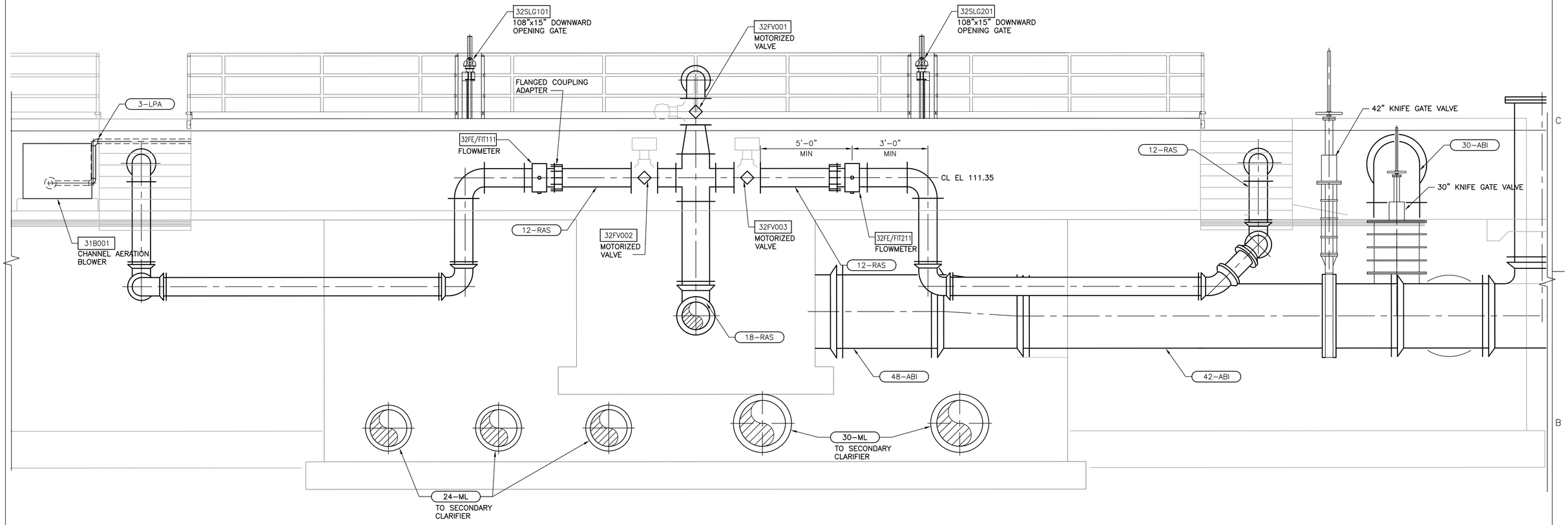


SECTION
3/8" = 1'-0"
E
32P101

FILE: 215786-32P105.dwg
DATE: Oct 07, 2015-4:47:26am, rsnider

HDR Engineering, Inc.

| ISSUE | DATE | DESCRIPTION |
|---|---|---|
| | | |
| | | |
| | | |
| | | |
| | | |
| | | |
| | | |
| A | JUNE 2015 | ISSUED FOR BID |

| | |
|---|---|
| PROJECT MANAGER | C. OLSON |
| | |
| DESIGNED | T. KONTONICKAS |
| DESIGNED | |
| CHECKED | C. OLSON |
| DRAWN | R. SNIDER |
| DATE | JUNE 30, 2015 |
| | |
| PROJECT NUMBER | 215786 |

REGISTERED PROFESSIONAL ENGINEER
CRAIG A. OLSON
NO. 39819
EXP. 12/31/15
CIVIL
STATE OF CALIFORNIA
04-30-15

CITY OF PINOLE CALIFORNIA 1903

PINOLE/HERCULES
WATER POLLUTION
CONTROL PLANT UPGRADE
CLIENT PN

**PROCESS**
**PRIMARY EFFLUENT AND MIXED LIQUOR FLOW SPLIT BOX SECTIONS**

0 1" 2"

| | |
|---|---|
| FILENAME | 215786-32P105 |
| SCALE | AS NOTED |

SHEET
**32P105**

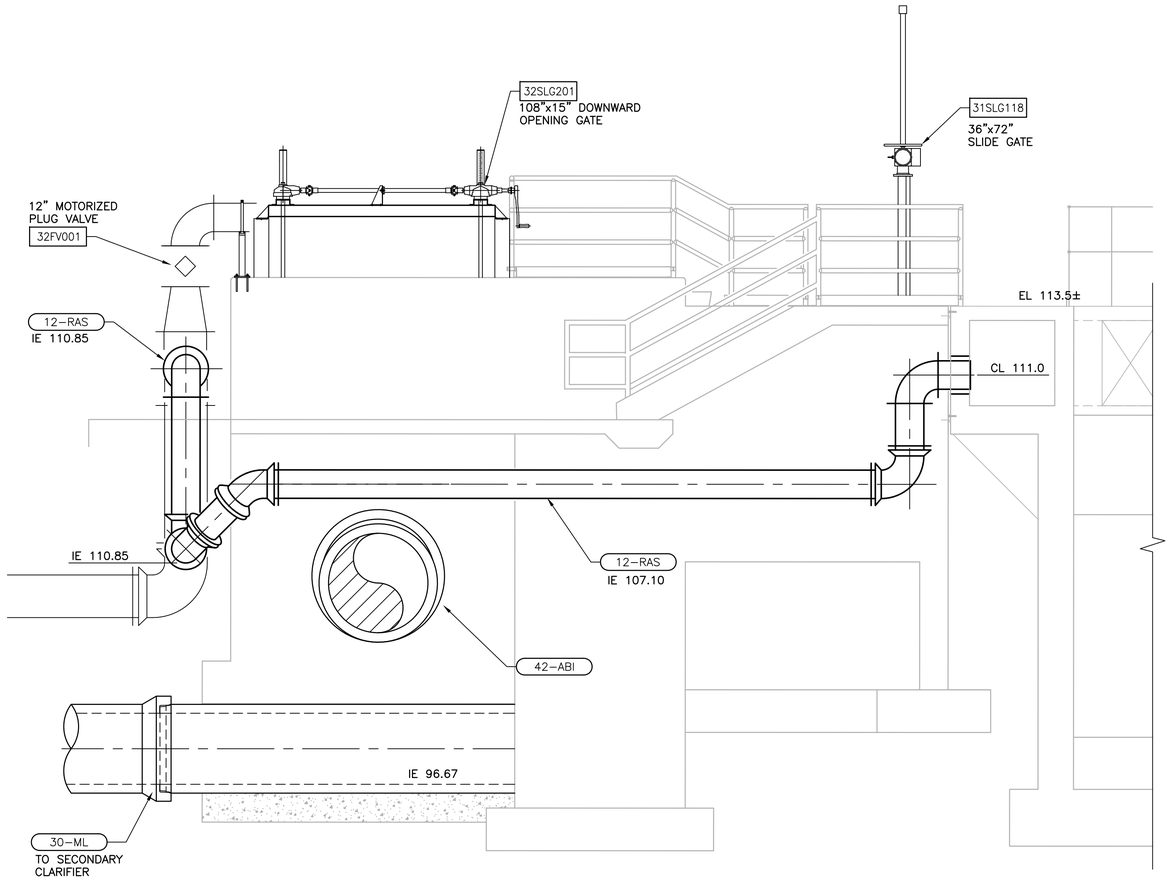


SECTION
3/8" = 1'-0"
F
32P101

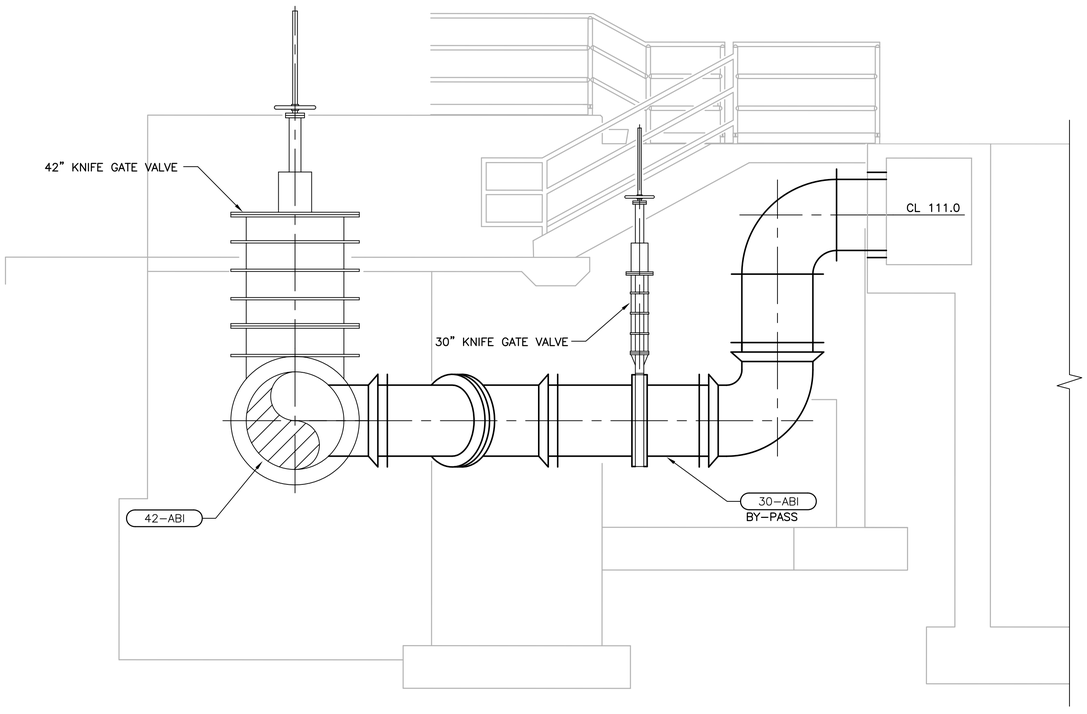


SECTION
3/8" = 1'-0"
G
32P101

FILE: 215786-32P106.dwg
DATE: Oct 07, 2015-4:47:32pm, rsnider

HDR Engineering, Inc.

| ISSUE | DATE | DESCRIPTION |
|---|---|---|
| A | JUNE 2015 | ISSUED FOR BID |

| | |
|---|---|
| PROJECT MANAGER | C. OLSON |
| DESIGNED | T. KONTONICKAS |
| DESIGNED | |
| CHECKED | C. OLSON |
| DRAWN | R. SNIDER |
| DATE | JUNE 30, 2015 |
| PROJECT NUMBER | 215786 |

REGISTERED PROFESSIONAL ENGINEER
CRAIG A. OLSON
NO. 39819
EXP. 12/31/15
CIVIL
STATE OF CALIFORNIA
06-30-15

CITY OF PINOLE CALIFORNIA 1903

PINOLE/HERCULES
WATER POLLUTION
CONTROL PLANT UPGRADE
CLIENT PN

**PROCESS**
**PRIMARY EFFLUENT AND MIXED LIQUOR**
**FLOW SPLIT BOX**
**SECTIONS**

0 1" 2"

| | |
|---|---|
| FILENAME | 215786-32P106 |
| SCALE | AS NOTED |

SHEET
**32P106**

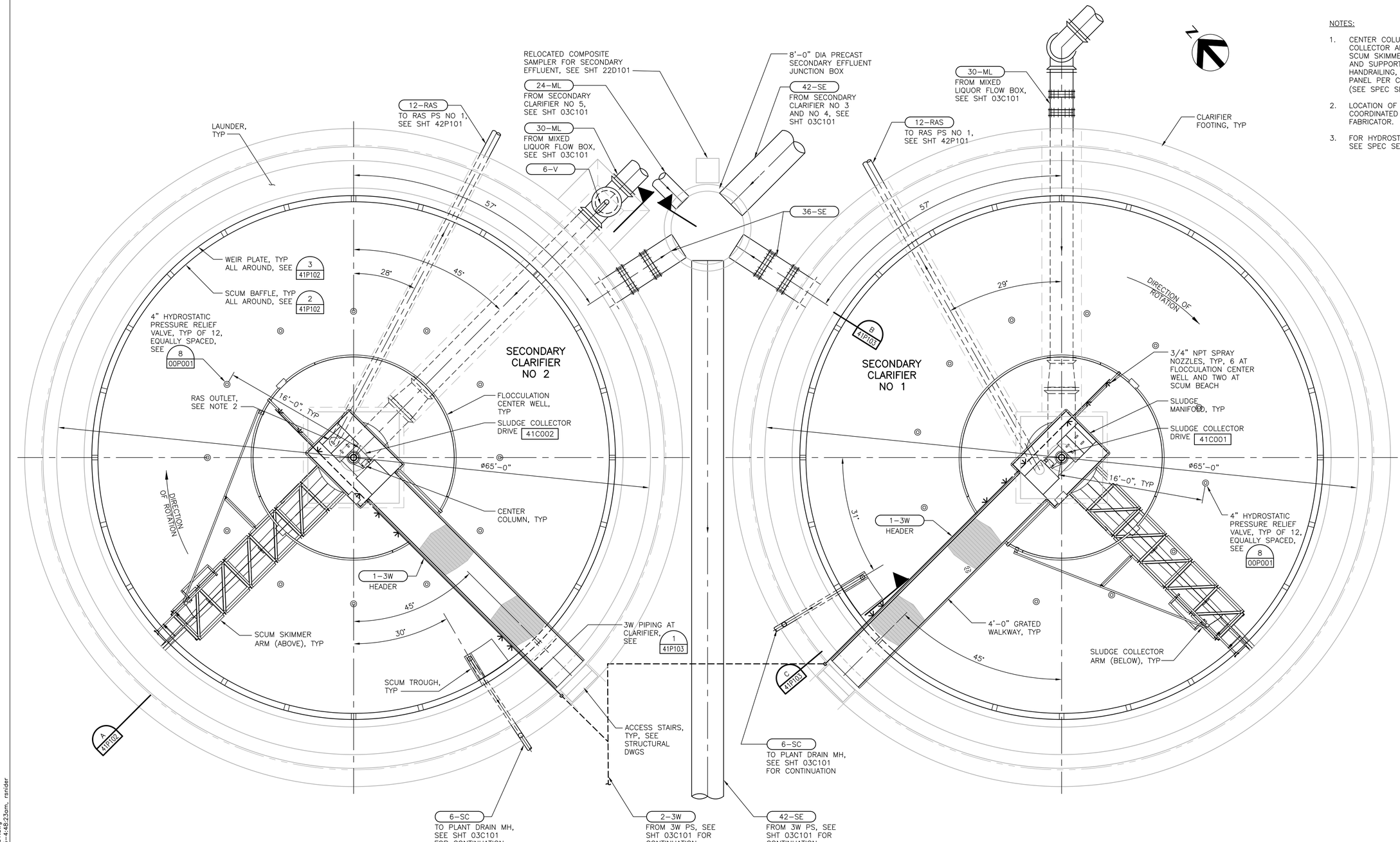


PLAN

3/16" = 1'–0"

NOTES:

1. CENTER COLUMN, SUPPORT CAGE, SLUDGE COLLECTOR AND SUPPORT, SLUDGE MANIFOLD, SCUM SKIMMER AND SUPPORT, SCUM BEACH AND SUPPORT, WALKWAY, PLATFORM, HANDRAILING, DRIVE MECHANISM, AND CONTROL PANEL PER CLARIFIER MECHANISM FABRICATOR (SEE SPEC SECTION 11125).
2. LOCATION OF 12–RAS OUTLET TO BE COORDINATED WITH CLARIFIER MECHANISM FABRICATOR.
3. FOR HYDROSTATIC PRESSURE RELIEF VALVES, SEE SPEC SECTION 15152.

FILE: 215786–41P101.dwg
DATE: Oct 07, 2015–4:48:23pm, rsnider

HDR Engineering, Inc.

| ISSUE | DATE | DESCRIPTION |
|---|---|---|
| A | JUNE 2015 | ISSUED FOR BID |

| | |
|---|---|
| PROJECT MANAGER | C. OLSON |
| DESIGNED | T. KONTONICKAS |
| DESIGNED | |
| CHECKED | C. OLSON |
| DRAWN | M. FOYLE |
| DATE | JUNE 30, 2015 |
| PROJECT NUMBER | 215786 |

REGISTERED PROFESSIONAL ENGINEER THEODORE H. KONTONICKAS NO. 29378 EXP. 06/30/17 MECHANICAL STATE OF CALIFORNIA

CITY OF PINOLE CALIFORNIA 1903

PINOLE/HERCULES WATER POLLUTION CONTROL PLANT UPGRADE CLIENT PN

**PROCESS**

**SECONDARY CLARIFIERS NO 1 AND NO 2 PLAN**

0 1" 2"

| FILENAME | 215786–41P101 |
|---|---|
| SCALE | AS NOTED |

SHEET **41P101**

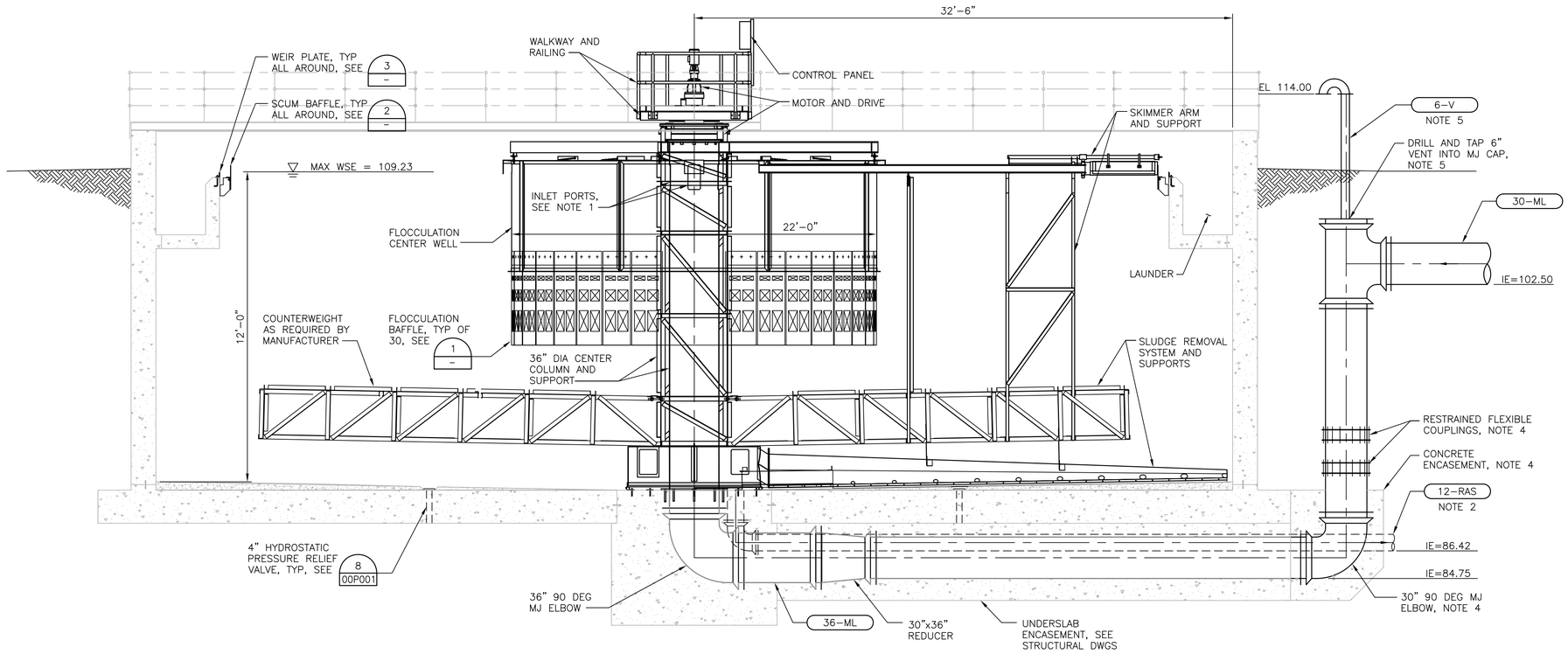


## SECTION

1/4" = 1'-0" — A 41P101

NOTES:

1. CENTER COLUMN, SUPPORT CAGE, SLUDGE COLLECTOR AND SUPPORT, SLUDGE MANIFOLD, SCUM SKIMMER AND SUPPORT, SCUM BEACH AND SUPPORT, WALKWAY, PLATFORM, HANDRAILING, DRIVE MECHANISM, AND CONTROL PANEL PER CLARIFIER MECHANISM FABRICATOR (SEE SPEC SECTION 11125).
2. PIPING ROTATED FROM TRUE POSITION, SEE PLAN FOR ORIENTATION.
3. SEE SPEC SECTION 11150 FOR FLOCCULATION BAFFLES, WEIR PLATES AND SCUM BAFFLES.
4. INFLUENT PIPING ARRANGEMENT IS SHOWN FOR CLARIFIER NO. 2. FOR CLARIFIER NO. 1, ENCASEMENT ENDS AT FOOTING AND FLEXIBLE COUPLINGS ARE IN THE HORIZONTAL ARRANGEMENT PER PLAN ON SHEET 41P101.
5. PROVIDE 6" VENT ON TEE AT CLARIFIER NO. 2 ONLY.

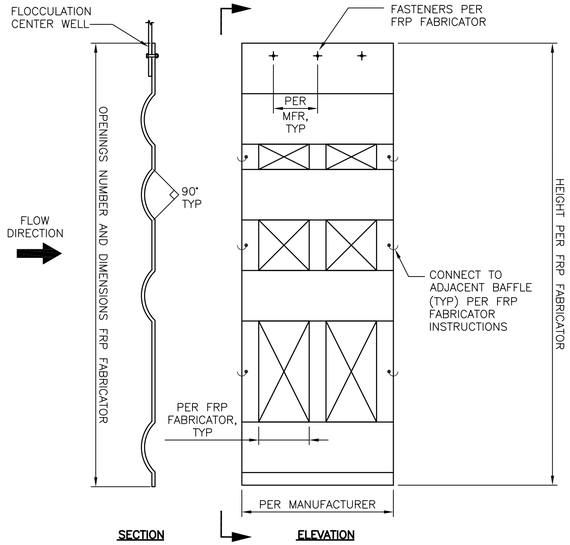


## FLOCCULATION BAFFLE DETAIL

1" = 1'-0" SEE NOTE 3 — 1

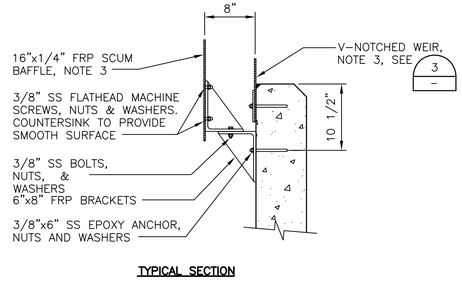


TYPICAL SECTION

## SCUM BAFFLE DETAIL

1" = 1'-0" — 2

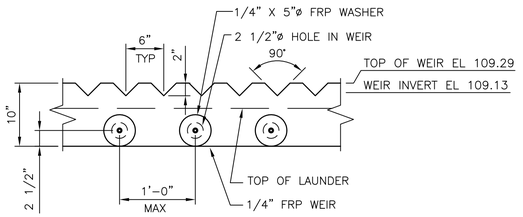


ELEVATION

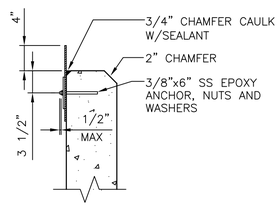


TYPICAL SECTION

## V-NOTCH WEIR DETAIL

1" = 1'-0" SEE NOTE 3 — 3

FILE: 215786-41P102.dwg
DATE: Oct 07, 2015-4:48:29am, rsnider

HDR Engineering, Inc.

| ISSUE | DATE | DESCRIPTION |
|---|---|---|
| A | JUNE 2015 | ISSUED FOR BID |

| | |
|---|---|
| PROJECT MANAGER | C. OLSON |
| DESIGNED | T. KONTONICKAS |
| DESIGNED | |
| CHECKED | C. OLSON |
| DRAWN | M. FOYLE |
| DATE | JUNE 30, 2015 |
| PROJECT NUMBER | 215786 |

REGISTERED PROFESSIONAL ENGINEER THEODORE H. KONTONICKAS NO. 29378 EXP. 06/30/17 MECHANICAL STATE OF CALIFORNIA

CITY OF PINOLE CALIFORNIA 1903

PINOLE/HERCULES WATER POLLUTION CONTROL PLANT UPGRADE
CLIENT PN

**PROCESS**

**SECONDARY CLARIFIERS NO 1 AND NO 2 SECTION AND DETAILS**

0 1" 2"

| | |
|---|---|
| FILENAME | 215786-41P102 |
| SCALE | AS NOTED |

SHEET **41P102**

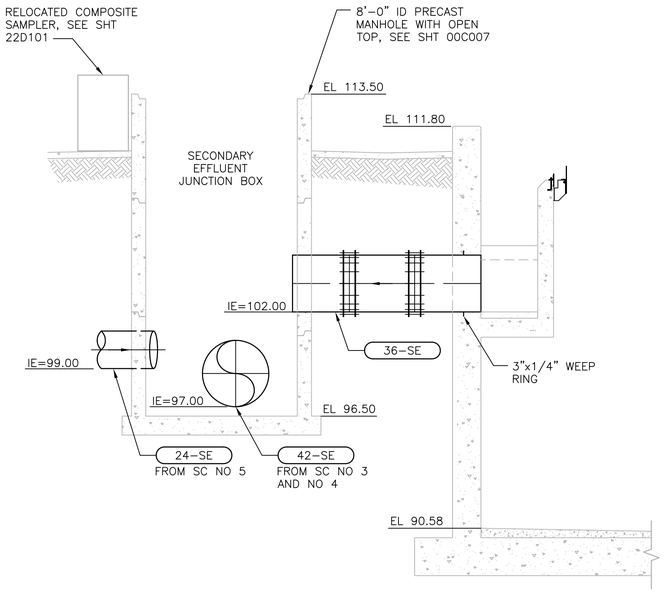


## SECTION
1/4" = 1'-0"
B 41P101

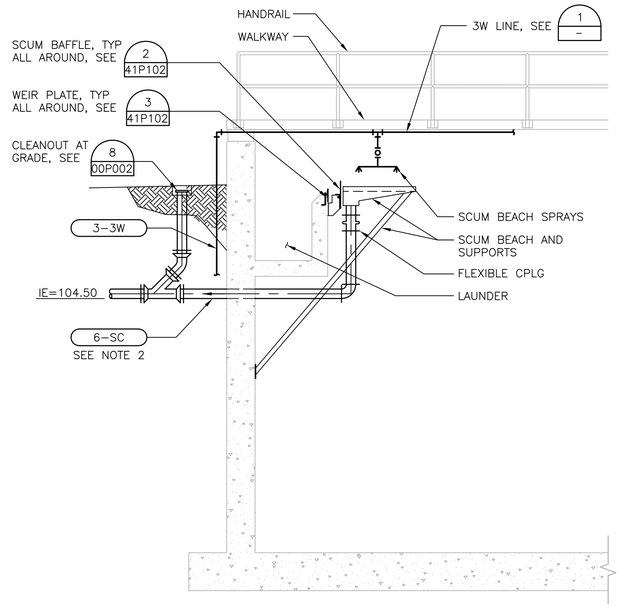


## SECTION
1/4" = 1'-0"
C 41P101

NOTES:

1. SCUM BEACH AND SUPPORTS, WALKWAYS, AND RAILINGS PER CLARIFIER MECHANISM FABRICATOR (SEE SPEC SECTION 11125).

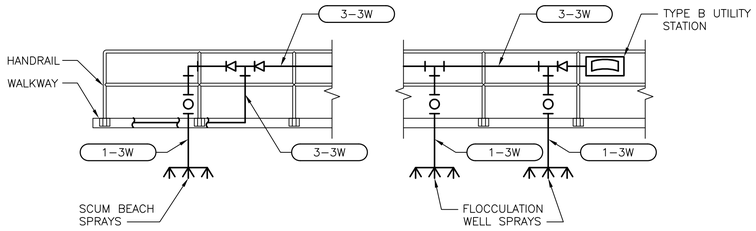


NOTES:
1. MOUNT ALL VALVES FOR EASY ACCESS FROM WALWAY BRIDGE OR CENTER PLATFORM.

## 3W PIPING SCHEMATIC DETAIL
1 41P101
NOT TO SCALE

FILE: 215786-41P103.dwg
DATE: Oct 07, 2015-4:48:36pm, rsnider

HDR Engineering, Inc.

| ISSUE | DATE | DESCRIPTION |
|---|---|---|
| A | JUNE 2015 | ISSUED FOR BID |

| | |
|---|---|
| PROJECT MANAGER | C. OLSON |
| DESIGNED | T. KONTONICKAS |
| DESIGNED | |
| CHECKED | C. OLSON |
| DRAWN | M. FOYLE |
| DATE | JUNE 30, 2015 |
| PROJECT NUMBER | 215786 |

REGISTERED PROFESSIONAL ENGINEER
THEODORE H. KONTONICKAS
NO. 29378
EXP. 06/30/17
MECHANICAL
STATE OF CALIFORNIA
06-30-15

CITY OF PINOLE CALIFORNIA 1903

PINOLE/HERCULES
WATER POLLUTION
CONTROL PLANT UPGRADE
CLIENT PN

**PROCESS**

**SECONDARY CLARIFIERS NO 1 AND NO 2 SECTIONS AND DETAIL**

0 1" 2"

| | |
|---|---|
| FILENAME | 215786-41P103 |
| SCALE | AS NOTED |

SHEET **41P103**

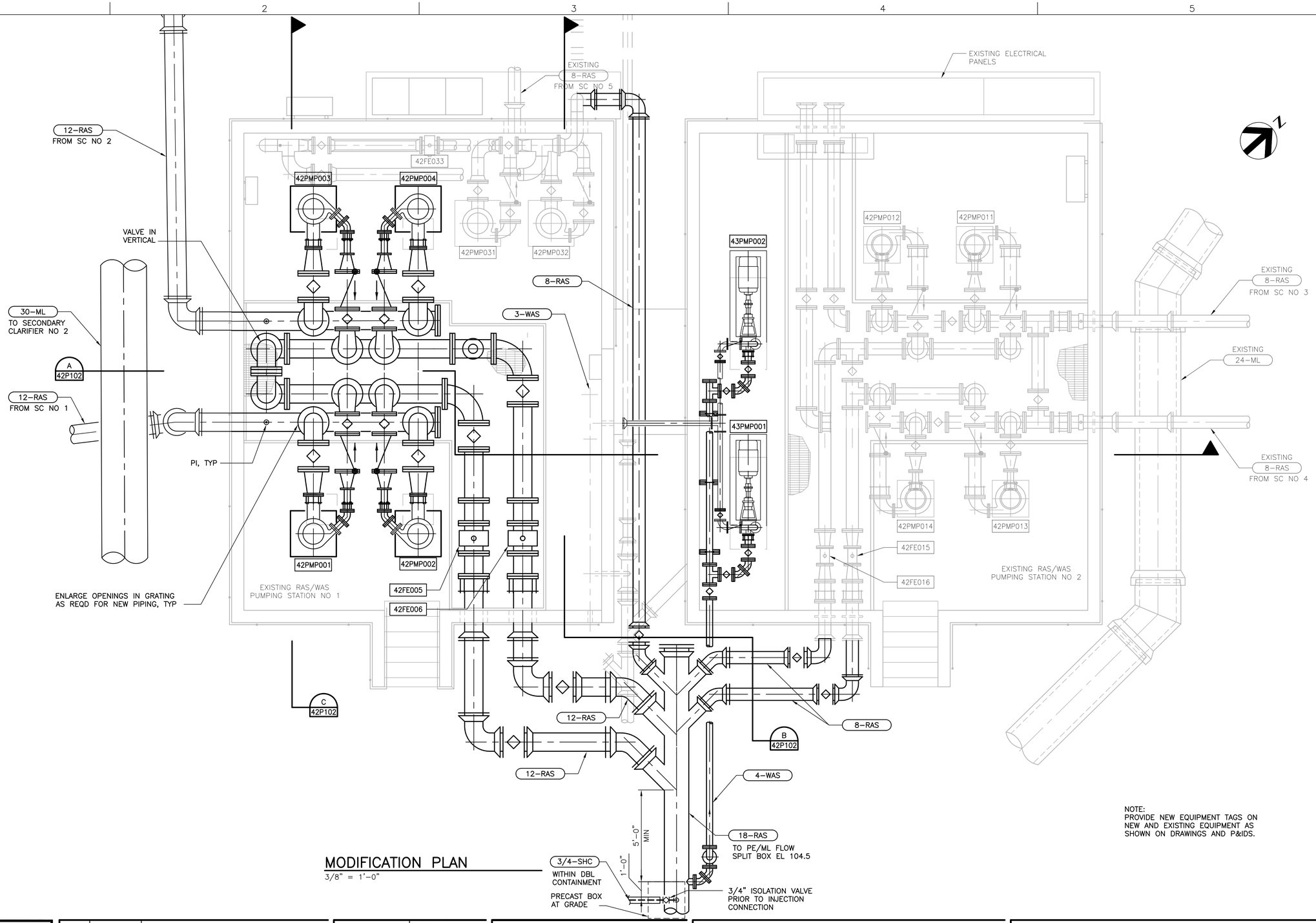


## MODIFICATION PLAN

3/8" = 1'–0"

NOTE:
PROVIDE NEW EQUIPMENT TAGS ON NEW AND EXISTING EQUIPMENT AS SHOWN ON DRAWINGS AND P&IDS.

FILE: 215786–42P101.dwg
DATE: Oct 07, 2015–4:49:21am, rsnider

HDR Engineering, Inc.

| ISSUE | DATE | DESCRIPTION |
|---|---|---|
| A | JUNE 2015 | ISSUED FOR BID |

| | |
|---|---|
| PROJECT MANAGER | C. OLSON |
| | |
| DESIGNED | M. RAMANATHAN |
| DESIGNED | |
| CHECKED | C. OLSON |
| DRAWN | B. DOWN |
| DATE | JUNE 30, 2015 |
| | |
| PROJECT NUMBER | 215786 |

REGISTERED PROFESSIONAL ENGINEER
THEODORE H. KONTOVERAS
NO. 29378
EXP. 06/30/17
MECHANICAL
STATE OF CALIFORNIA
06-30-15

CITY OF PINOLE CALIFORNIA 1903

PINOLE/HERCULES
WATER POLLUTION
CONTROL PLANT UPGRADE
CLIENT PN

**PROCESS**
**EXISTING RAS/WAS PUMPING STATIONS**
**MODIFICATION PLAN**

0 1" 2"

| | |
|---|---|
| FILENAME | 215786–42P101 |
| SCALE | AS NOTED |

SHEET **42P101**

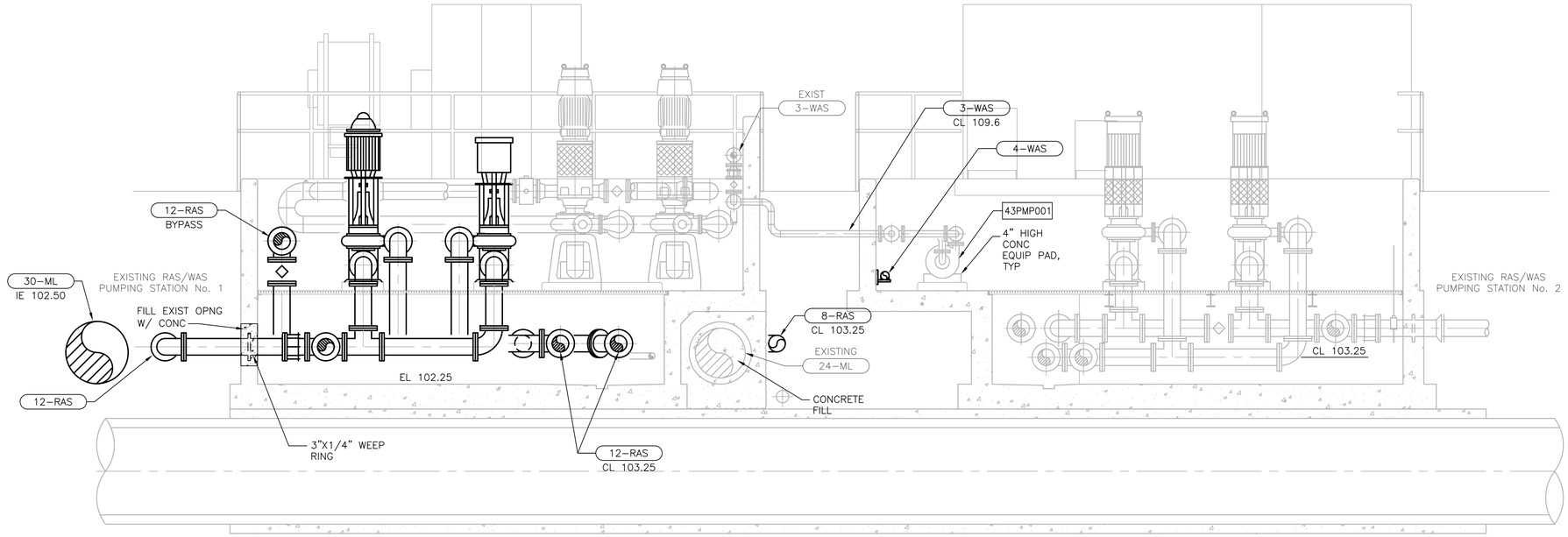


## SECTION
3/8" = 1'–0"
A 42P101

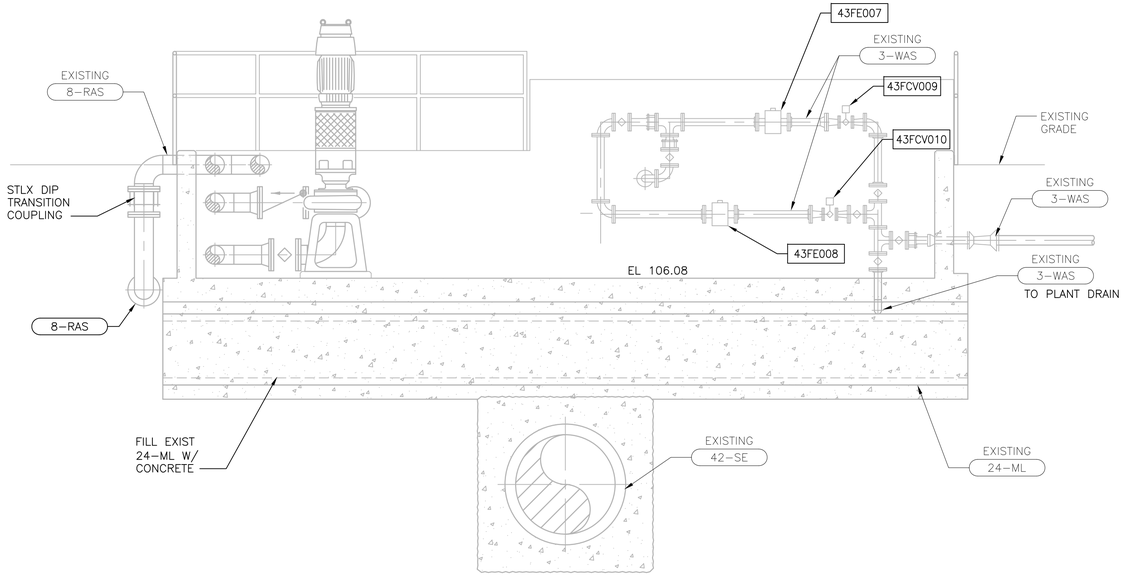


## SECTION
3/8" = 1'–0"
B 42P101

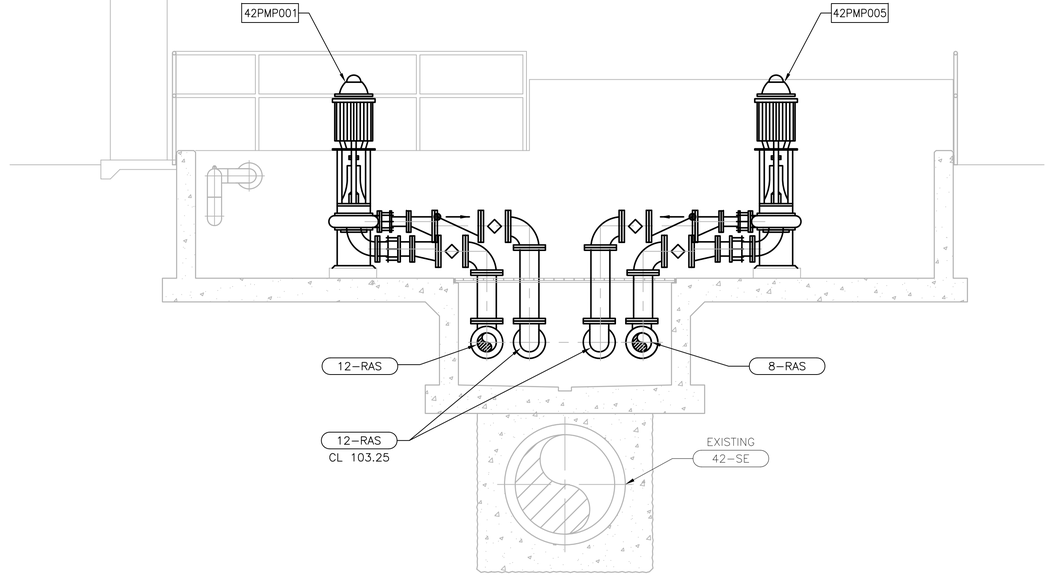


## SECTION
3/8" = 1'–0"
C 42P101

FILE: 215786–42P102.dwg
DATE: Oct 07, 2015–4:49:27pm, rsnider

HDR Engineering, Inc.

| ISSUE | DATE | DESCRIPTION |
|---|---|---|
| A | JUNE 2015 | ISSUED FOR BID |

| | |
|---|---|
| PROJECT MANAGER | C. OLSON |
| | |
| DESIGNED | T. KONTONICKAS |
| DESIGNED | |
| CHECKED | C. OLSON |
| DRAWN | B. DOWN |
| DATE | JUNE 30, 2015 |
| | |
| PROJECT NUMBER | 215786 |

REGISTERED PROFESSIONAL ENGINEER
THEODORE H. KONTONICKAS
NO. 29378
EXP. 06/30/17
MECHANICAL
STATE OF CALIFORNIA
06-30-15

CITY OF PINOLE CALIFORNIA 1903

PINOLE/HERCULES
WATER POLLUTION
CONTROL PLANT UPGRADE
CLIENT PN

**PROCESS**
**EXISTING RAS/WAS PUMPING STATIONS**
**MODIFICATIONS SECTIONS**

0 1" 2"

| | |
|---|---|
| FILENAME | 215786–42P102 |
| SCALE | AS NOTED |

SHEET
**42P102**

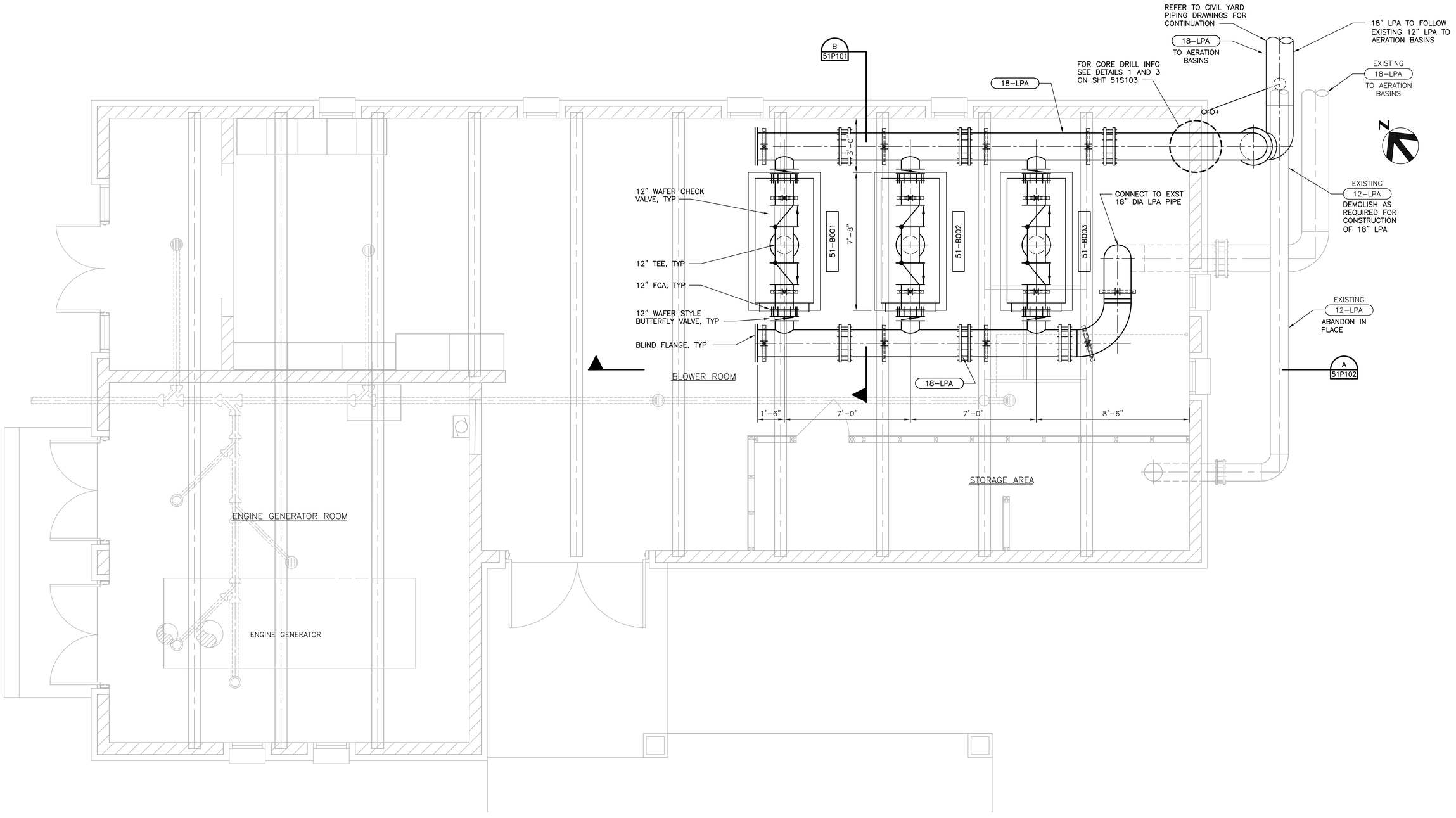


## EXISTING BLOWER BUILDING PLAN

3/8" = 1'-0"

FILE: 215786-51P101.dwg
DATE: Oct 07, 2015-4:50:03pm, renider

HDR Engineering, Inc.

| ISSUE | DATE | DESCRIPTION |
|---|---|---|
| A | JUNE 2015 | ISSUED FOR BID |

| | |
|---|---|
| PROJECT MANAGER | C. OLSON |
| DESIGNED | T. KONTONICKAS |
| DESIGNED | |
| CHECKED | C. OLSON |
| DRAWN | B.DOWN |
| DATE | JUNE 30, 2015 |
| PROJECT NUMBER | 215786 |

REGISTERED PROFESSIONAL ENGINEER
THEODORE H. KONTONICKAS
NO. 29378
EXP. 06/30/17
MECHANICAL
STATE OF CALIFORNIA
06-30-15

CITY OF PINOLE CALIFORNIA 1903

PINOLE/HERCULES
WATER POLLUTION
CONTROL PLANT UPGRADE
CLIENT PN

**PROCESS**
**EXISTING BLOWER BUILDING MODIFICATIONS PLAN**

0 1" 2"

| | |
|---|---|
| FILENAME | 215786-51P101 |
| SCALE | AS NOTED |

SHEET
**51P101**

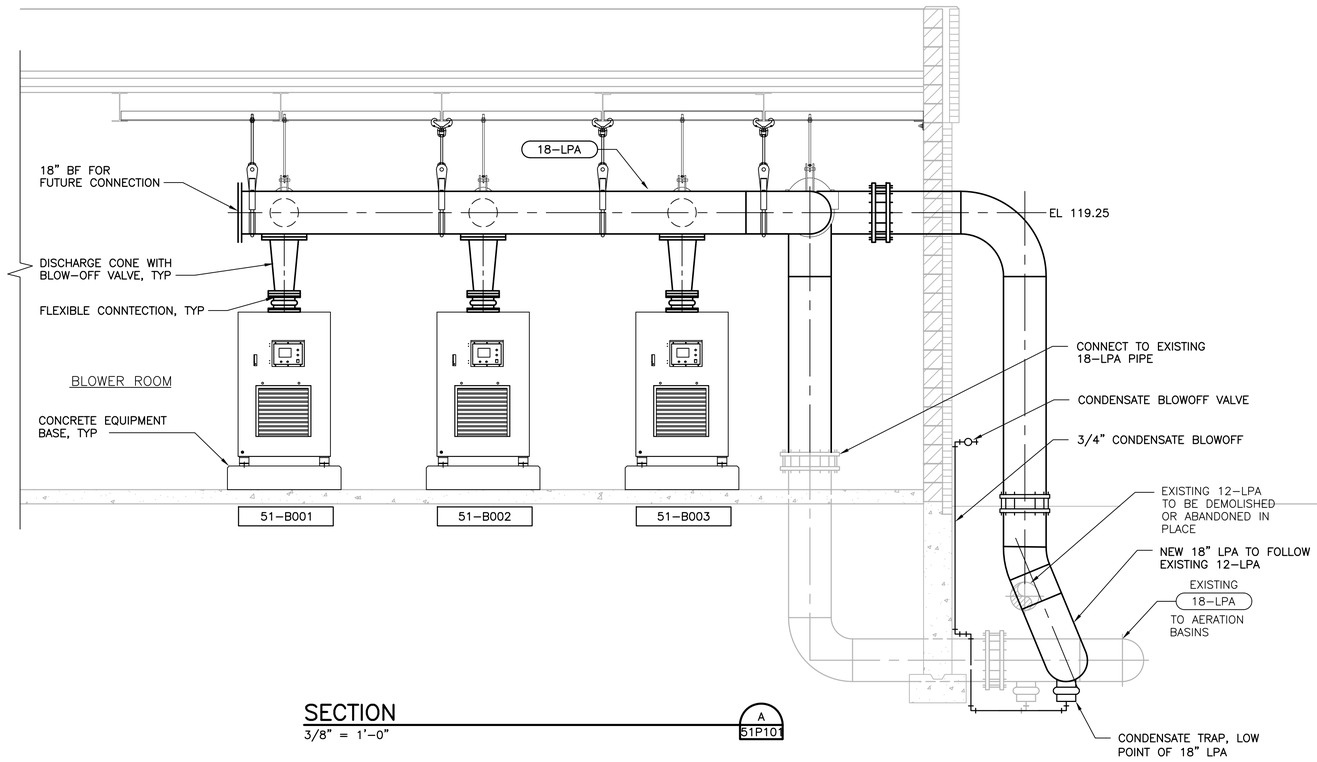


## SECTION
3/8" = 1'-0"
A / 51P101

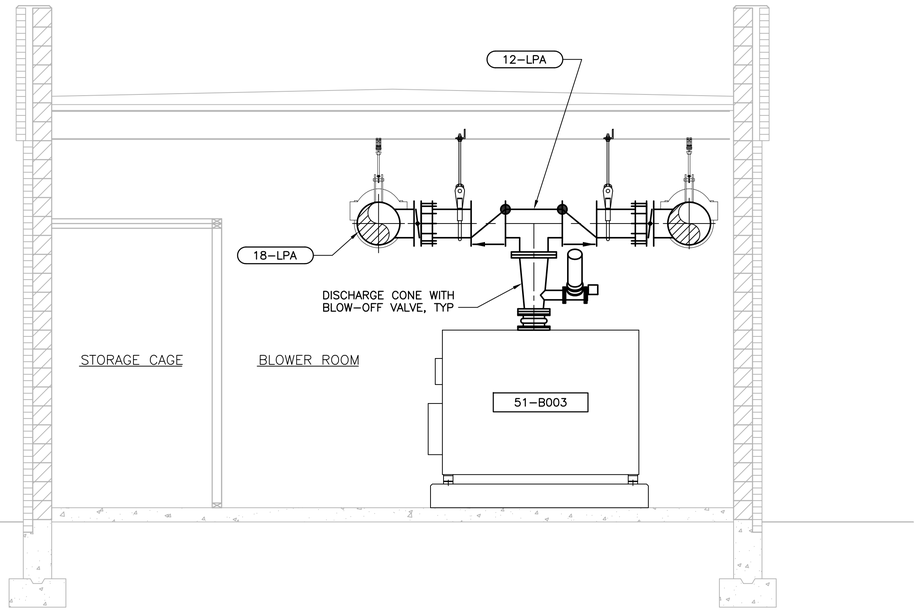


## SECTION
3/8" = 1'-0"
B / 51P101

FILE: 215786-51P102.dwg
DATE: Oct 07, 2015-4:50:09am, rsnider

HDR Engineering, Inc.

| ISSUE | DATE | DESCRIPTION |
|---|---|---|
| A | JUNE 2015 | ISSUED FOR BID |

| | |
|---|---|
| PROJECT MANAGER | C. OLSON |
| DESIGNED | T. KONTONICKAS |
| DESIGNED | |
| CHECKED | C. OLSON |
| DRAWN | B. DOWN |
| DATE | JUNE 30, 2015 |
| PROJECT NUMBER | 215786 |

REGISTERED PROFESSIONAL ENGINEER
THEODORE H. KONTONICKAS
NO. 29378
EXP. 06/30/17
MECHANICAL
STATE OF CALIFORNIA
06-30-15

CITY OF PINOLE CALIFORNIA 1903

PINOLE/HERCULES
WATER POLLUTION
CONTROL PLANT UPGRADE
CLIENT PN

**PROCESS**
**EXISTING BLOWER BUILDING**
**MODIFICATIONS SECTIONS AND DETAILS**

0 1" 2"

| | |
|---|---|
| FILENAME | 215786-51P102 |
| SCALE | AS NOTED |

SHEET
**51P102**

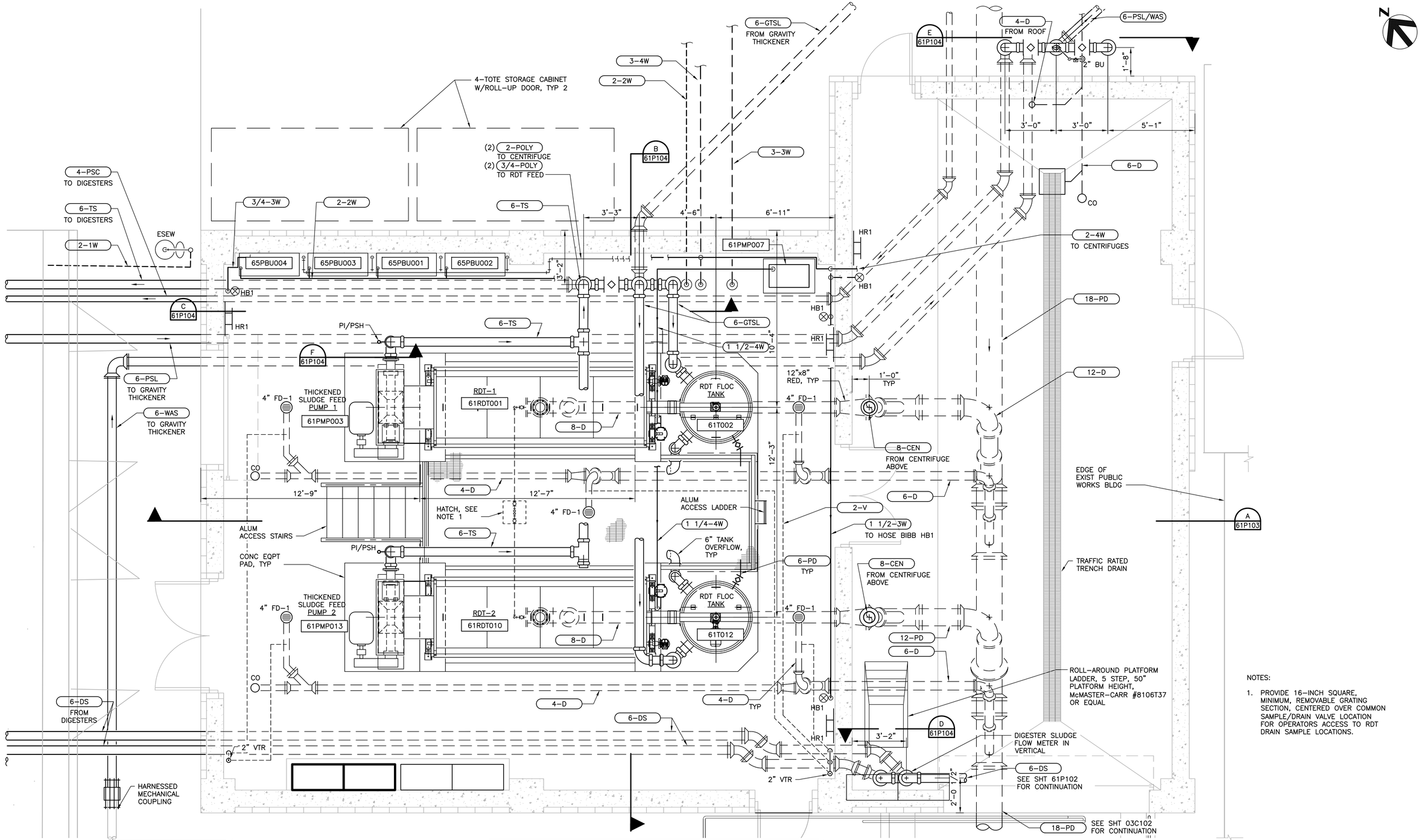


NOTES:

1. PROVIDE 16-INCH SQUARE, MINIMUM, REMOVABLE GRATING SECTION, CENTERED OVER COMMON SAMPLE/DRAIN VALVE LOCATION FOR OPERATORS ACCESS TO RDT DRAIN SAMPLE LOCATIONS.

FILE: 215786-61P101.dwg
DATE: Oct 07, 2015-4:53:26pm, rsnider

HDR Engineering, Inc.

| ISSUE | DATE | DESCRIPTION |
|---|---|---|
| A | JUNE 2015 | ISSUED FOR BID |

| | |
|---|---|
| PROJECT MANAGER | C. OLSON |
| | |
| DESIGNED | T. KONTONICKAS |
| DESIGNED | |
| CHECKED | C. OLSON |
| DRAWN | P. VAN MEURS |
| DATE | JUNE 30, 2015 |
| | |
| PROJECT NUMBER | 215786 |

REGISTERED PROFESSIONAL ENGINEER
THEODORE H. KONTONICKAS
NO. 29378
EXP. 06/30/17
MECHANICAL
STATE OF CALIFORNIA
06-30-15

CITY OF PINOLE CALIFORNIA 1903

PINOLE/HERCULES WATER POLLUTION CONTROL PLANT UPGRADE
CLIENT PN

**PROCESS**

**SOLIDS HANDLING BUILDING FLOOR LEVEL PLAN**

0 1" 2"

| | |
|---|---|
| FILENAME | 215786-61P101 |
| SCALE | 3/8"=1'-0" |

SHEET **61P101**

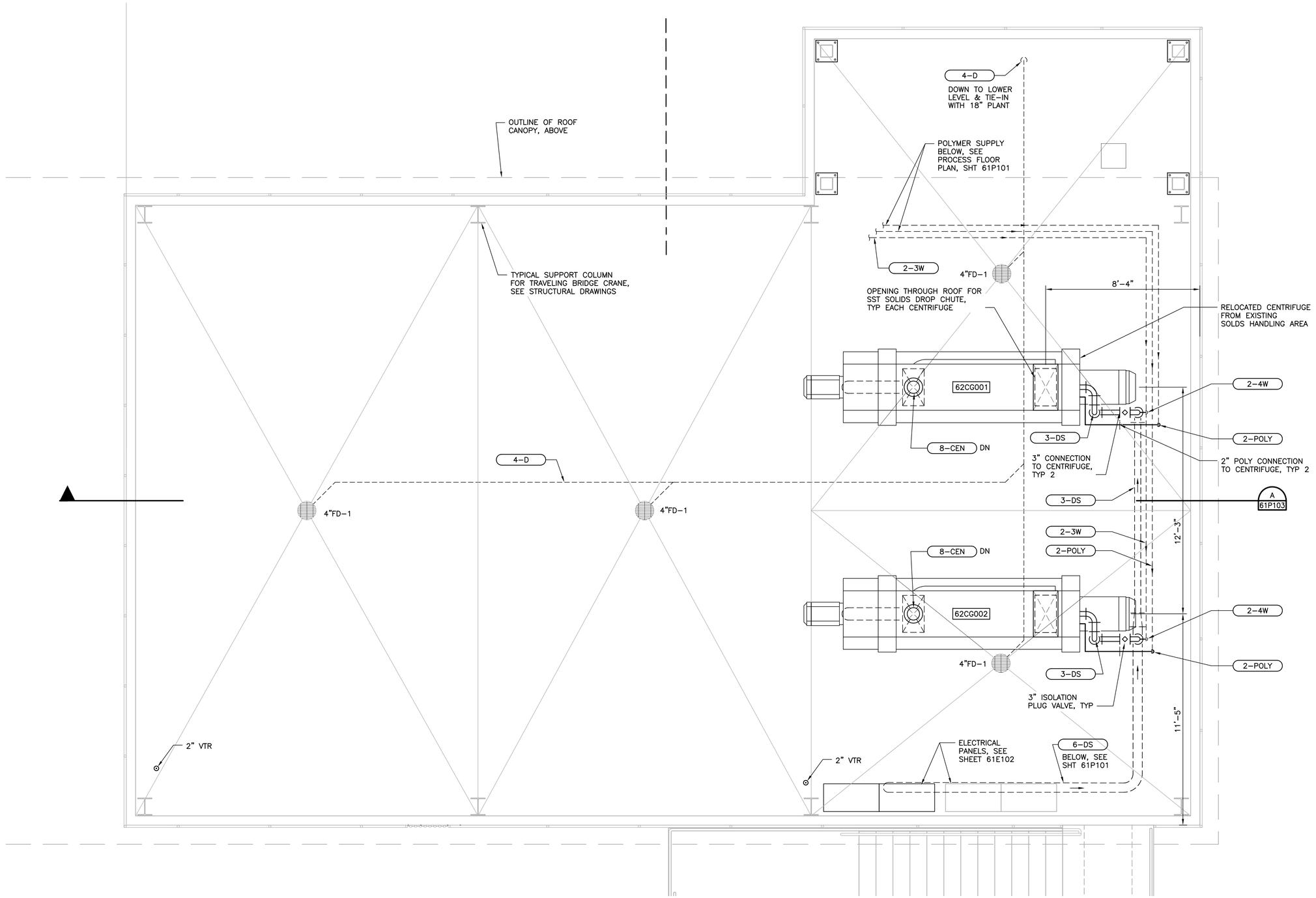


FILE: 215786–61P102.dwg
DATE: Oct 07, 2015–4:53:34pm, rsnider

HDR Engineering, Inc.

| ISSUE | DATE | DESCRIPTION |
|---|---|---|
| A | JUNE 2015 | ISSUED FOR BID |

| | |
|---|---|
| PROJECT MANAGER | C. OLSON |
| DESIGNED | T. KONTONICKAS |
| DESIGNED | |
| CHECKED | C. OLSON |
| DRAWN | P. VAN MEURS |
| DATE | JUNE 30, 2015 |
| PROJECT NUMBER | 215786 |

REGISTERED PROFESSIONAL ENGINEER
THEODORE H. KONTONICKAS
NO. 29378
EXP. 06/30/17
MECHANICAL
STATE OF CALIFORNIA
06-30-15

CITY OF PINOLE CALIFORNIA 1903

PINOLE/HERCULES
WATER POLLUTION
CONTROL PLANT UPGRADE
CLIENT PN

**PROCESS**

**SOLIDS HANDLING BUILDING ROOF LEVEL PLAN**

0 1" 2"

| | |
|---|---|
| FILENAME | 215786–61P102 |
| SCALE | 3/8"=1'–0" |

SHEET **61P102**

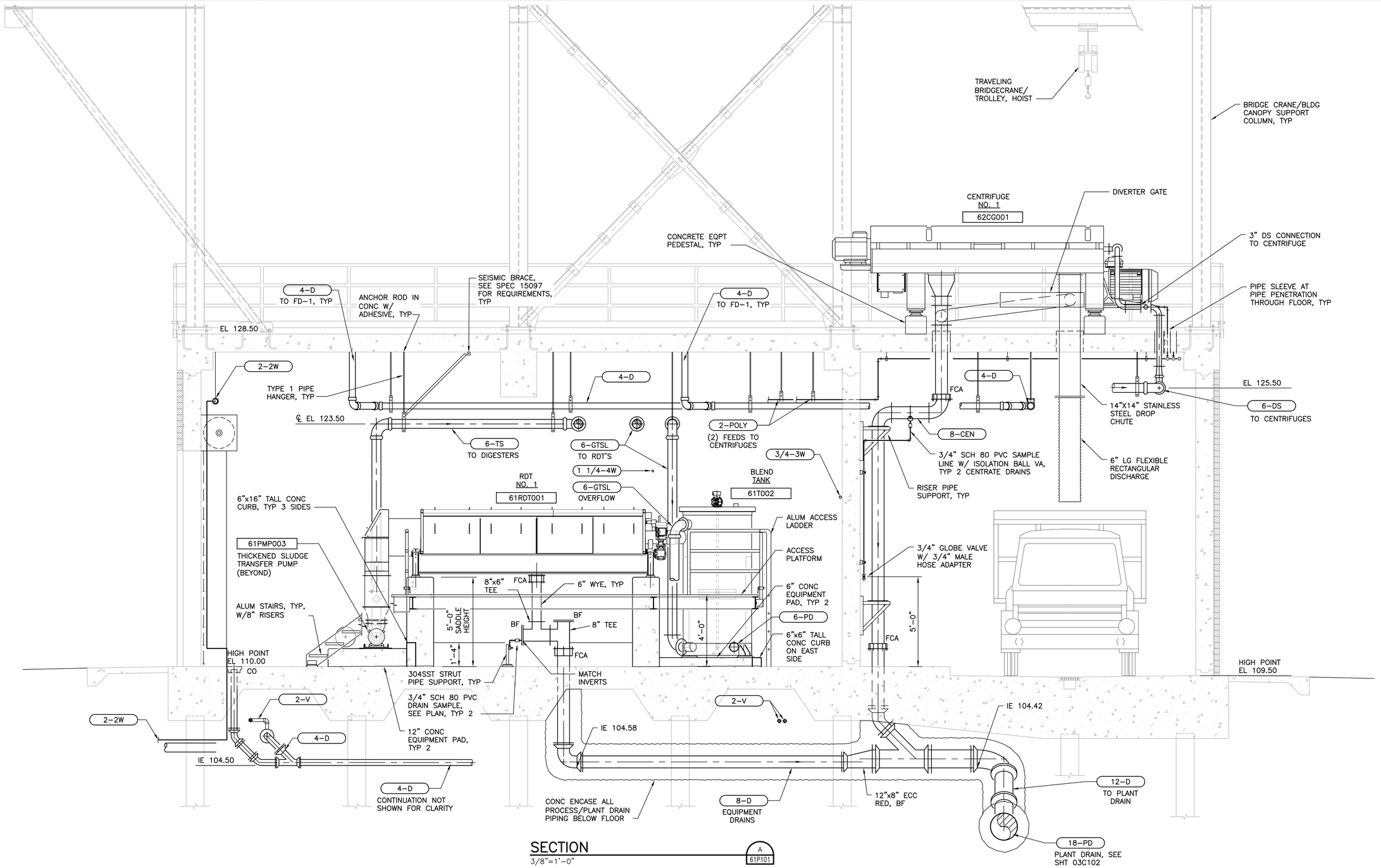


## SECTION

3/8"=1'-0"

A 61P101

| ISSUE | DATE | DESCRIPTION |
|---|---|---|
| A | JUNE 2015 | ISSUED FOR BID |

| | |
|---|---|
| PROJECT MANAGER | C. OLSON |
| DESIGNED | T. KONTONICKAS |
| DESIGNED | |
| CHECKED | C. OLSON |
| DRAWN | P. VAN MEURS |
| DATE | JUNE 30, 2015 |
| PROJECT NUMBER | 215786 |

HDR Engineering, Inc.

REGISTERED PROFESSIONAL ENGINEER THEODORE H. KONTONICKAS NO. 29378 EXP. 06/30/17 MECHANICAL STATE OF CALIFORNIA 06-30-15

CITY OF PINOLE CALIFORNIA 1903

PINOLE/HERCULES WATER POLLUTION CONTROL PLANT UPGRADE CLIENT PN

**PROCESS**

**SOLIDS HANDLING BUILDING SECTIONS 1**

0 1" 2"

| | |
|---|---|
| FILENAME | 215786-61P103 |
| SCALE | 3/8"=1'-0" |

SHEET **61P103**

FILE: 215786-61P103.dwg
DATE: Oct 07, 2015-4:53:42am, rsnider

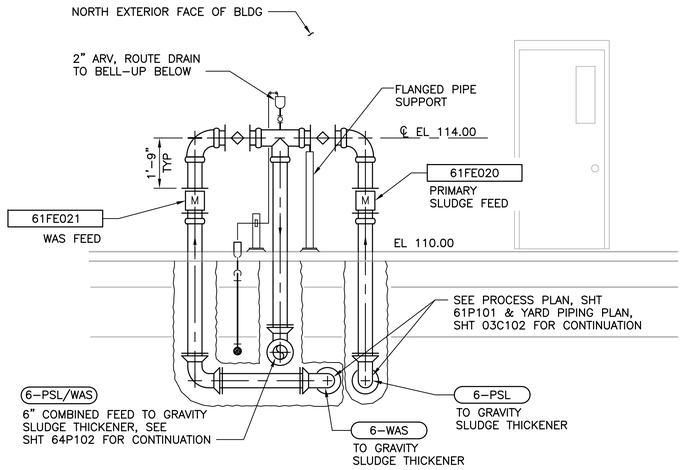


## SECTION
3/8" = 1'-0"
E 61P101

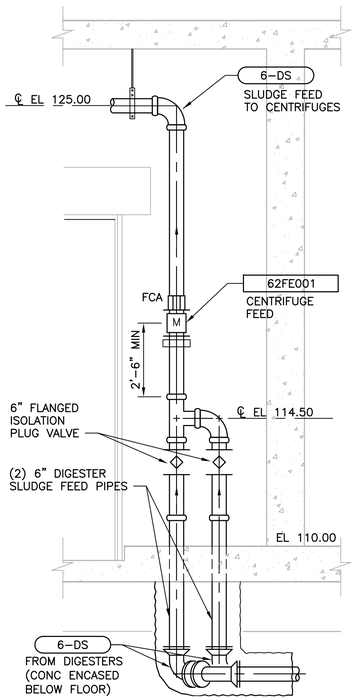


## SECTION
3/8" = 1'-0"
D 61P101

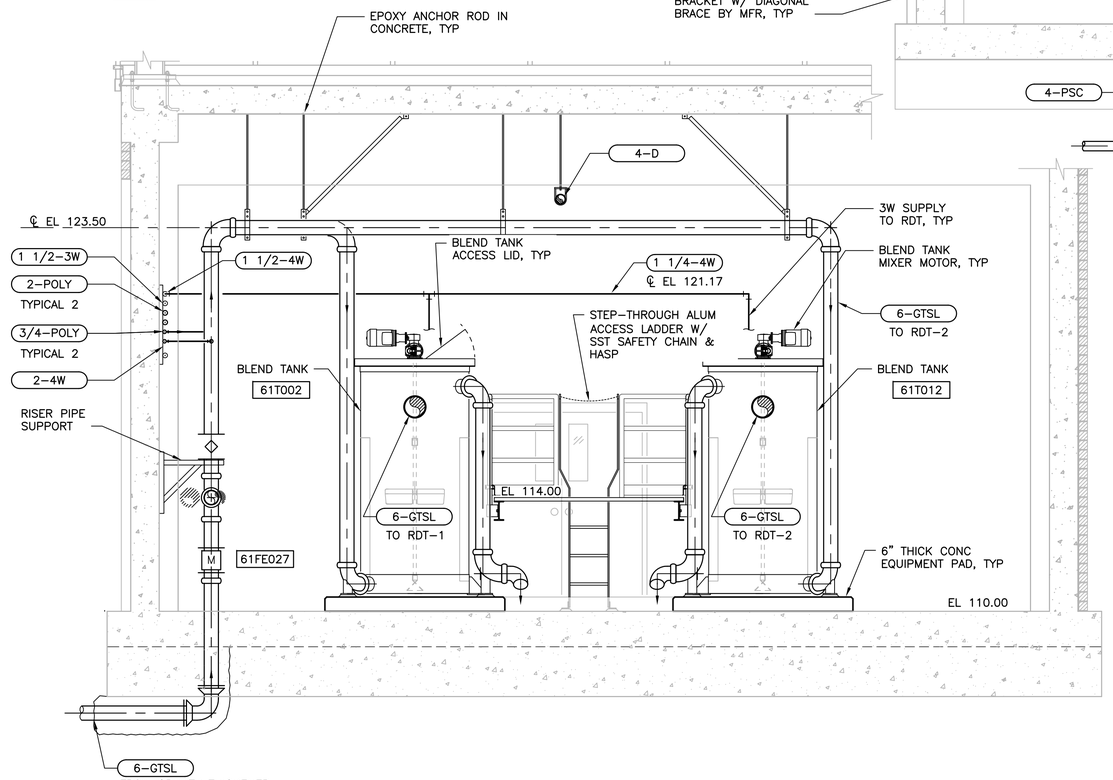


## SECTION
3/8" = 1'-0"
B 61P101

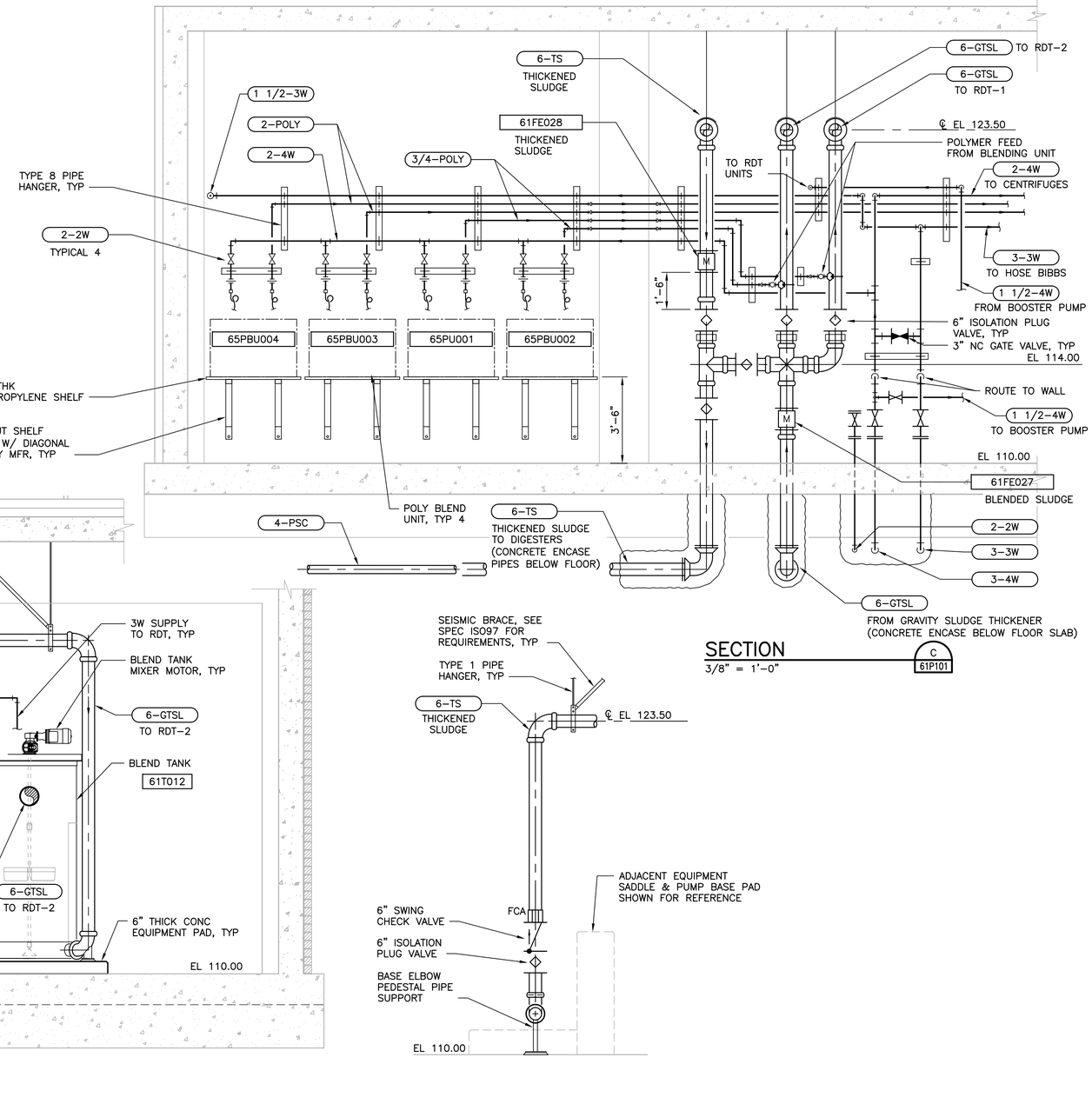


## SECTION
3/8" = 1'-0"
C 61P101




## SECTION
3/8" = 1'-0"
F 61P101

FILE: 215786-61P104.dwg
DATE: Oct 07, 2015-4:53:51pm, rsnider

HDR Engineering, Inc.

| ISSUE | DATE | DESCRIPTION |
|---|---|---|
| A | JUNE 2015 | ISSUED FOR BID |

| | |
|---|---|
| PROJECT MANAGER | C. OLSON |
| DESIGNED | T. KONTONICKAS |
| DESIGNED | |
| CHECKED | C. OLSON |
| DRAWN | P. VAN MEURS |
| DATE | JUNE 30, 2015 |
| PROJECT NUMBER | 215786 |

REGISTERED PROFESSIONAL ENGINEER THEODORE H. KONTONICKAS NO. 29378 EXP. 06/30/17 MECHANICAL STATE OF CALIFORNIA 06-30-15

CITY OF PINOLE CALIFORNIA 1903

PINOLE/HERCULES WATER POLLUTION CONTROL PLANT UPGRADE CLIENT PN

**PROCESS**

**SOLIDS HANDLING BUILDING SECTIONS II**

0 1" 2"

| | |
|---|---|
| FILENAME | 215786-61P104 |
| SCALE | 3/8"=1'-0" |

SHEET **61P104**

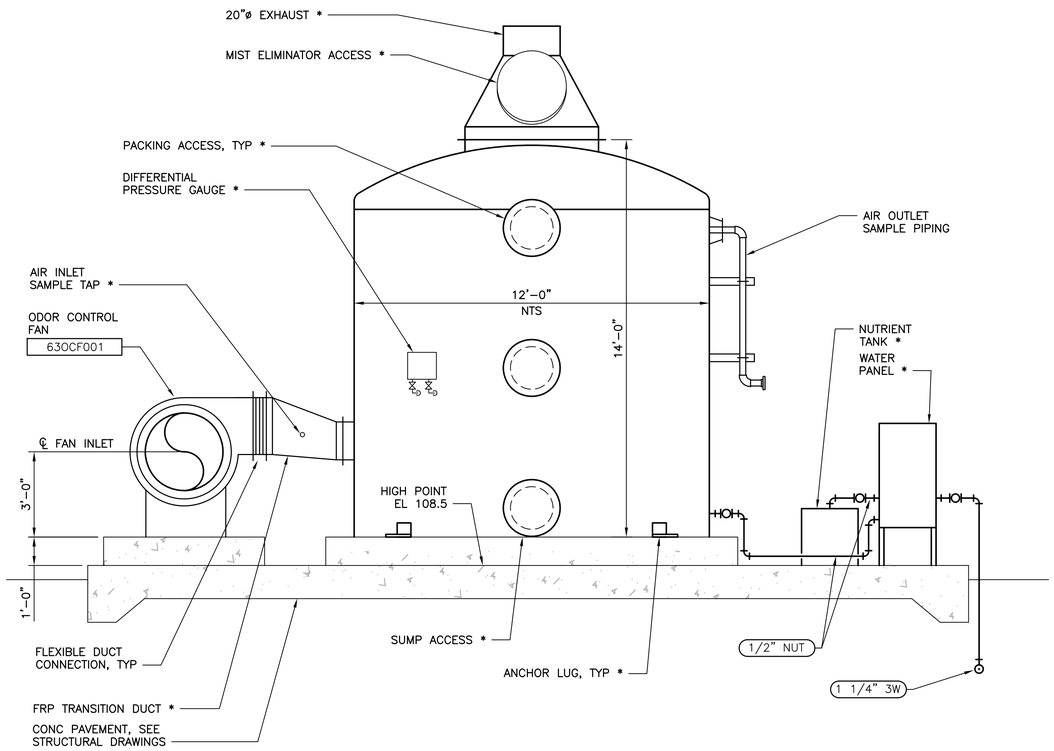


SECTION
3/8" = 1'-0"

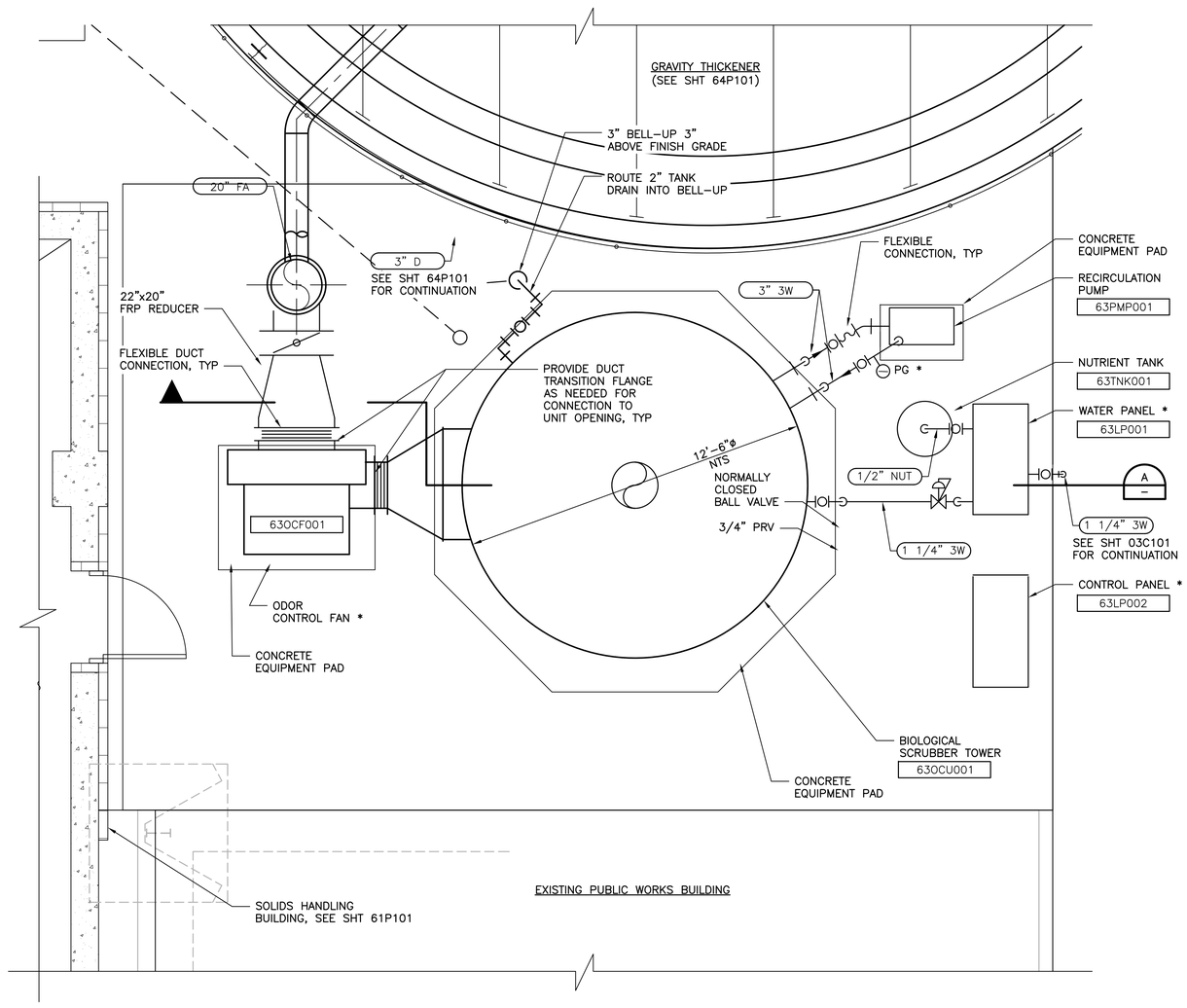


FILE: 63P101.dwg
DATE: Oct 07, 2015-5:03:59pm, rsnider

HDR Engineering, Inc.

| ISSUE | DATE | DESCRIPTION |
|---|---|---|
| A | JUNE 2015 | ISSUED FOR BID |

| | |
|---|---|
| PROJECT MANAGER | C. OLSON |
| DESIGNED | T. KONTONICKAS |
| DESIGNED | |
| CHECKED | C. OLSON |
| DRAWN | P. VAN MEURS |
| DATE | JUNE 30, 2015 |
| PROJECT NUMBER | 215786 |

REGISTERED PROFESSIONAL ENGINEER THEODORE H. KONTONICKAS NO. 29378 EXP. 06/30/17 MECHANICAL STATE OF CALIFORNIA 06-30-15

CITY OF PINOLE CALIFORNIA 1903

PINOLE/HERCULES
WATER POLLUTION
CONTROL PLANT UPGRADE
CLIENT PN

# PROCESS SOLIDS HANDLING ODOR CONTROL FACILITY PLAN AND SECTION

0 1" 2"

| | |
|---|---|
| FILENAME | 63P101 |
| SCALE | 1/4"=1'-0" |

SHEET
**63P101**

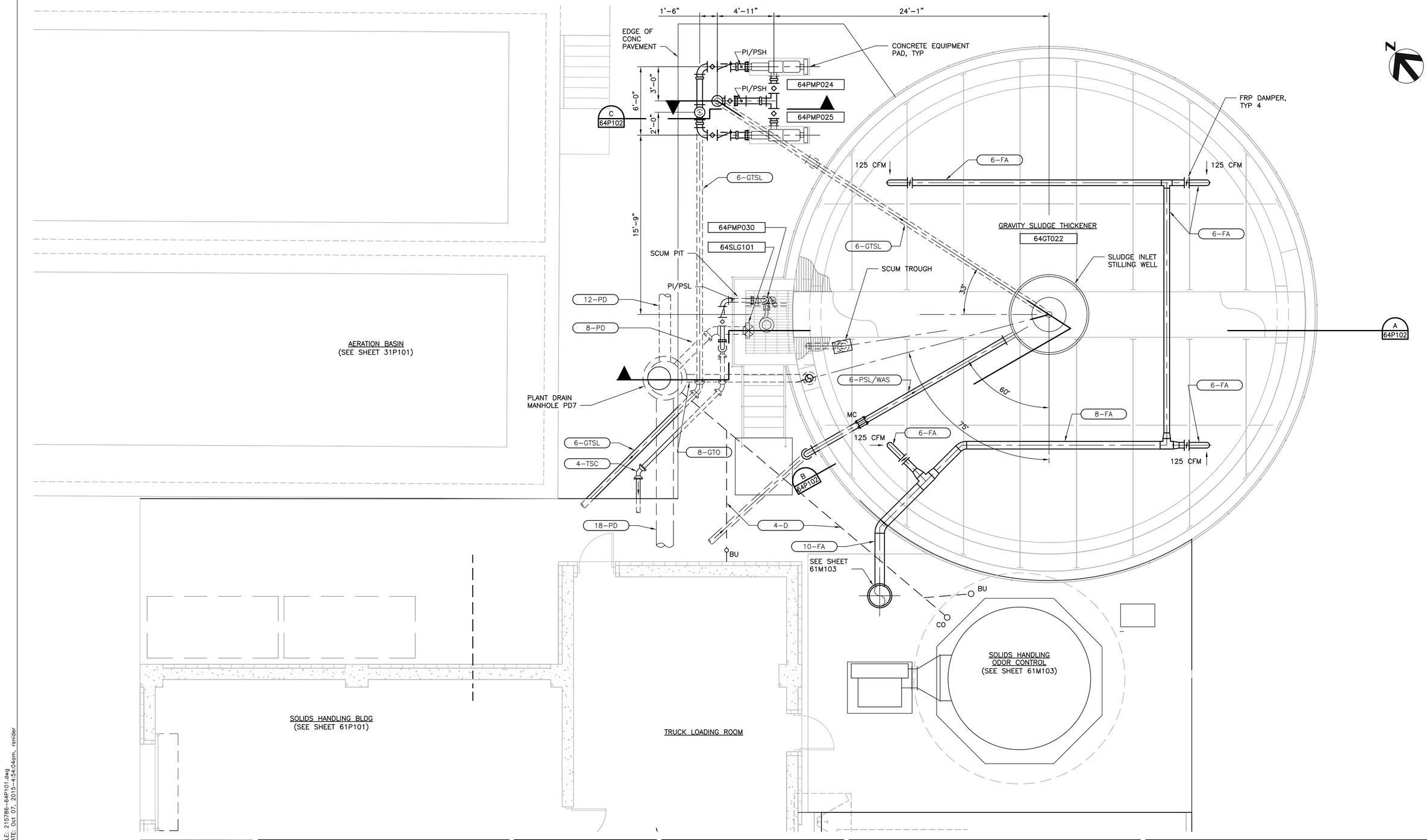


FILE: 215786-64P101.dwg
DATE: Oct 07, 2015-4:54:04am, rsnider

HDR Engineering, Inc.

| ISSUE | DATE | DESCRIPTION |
|---|---|---|
| | | |
| | | |
| | | |
| | | |
| | | |
| | | |
| A | JUNE 2015 | ISSUED FOR BID |

| | |
|---|---|
| PROJECT MANAGER | C. OLSON |
| | |
| DESIGNED | T. KONTONICKAS |
| DESIGNED | |
| CHECKED | C. OLSON |
| DRAWN | P. VAN MEURS |
| DATE | JUNE 30, 2015 |
| | |
| PROJECT NUMBER | 215786 |

REGISTERED PROFESSIONAL ENGINEER
THEODORE H. KONTONICKAS
NO. 29378
EXP. 06/30/17
MECHANICAL
STATE OF CALIFORNIA
06-30-15

CITY OF PINOLE CALIFORNIA 1903

PINOLE/HERCULES
WATER POLLUTION
CONTROL PLANT UPGRADE
CLIENT PN

**PROCESS**

**GRAVITY SLUDGE THICKENER PLAN**

0 1" 2"

| | |
|---|---|
| FILENAME | 215786-64P101 |
| SCALE | 1/4"=1'-0" |

SHEET
**64P101**

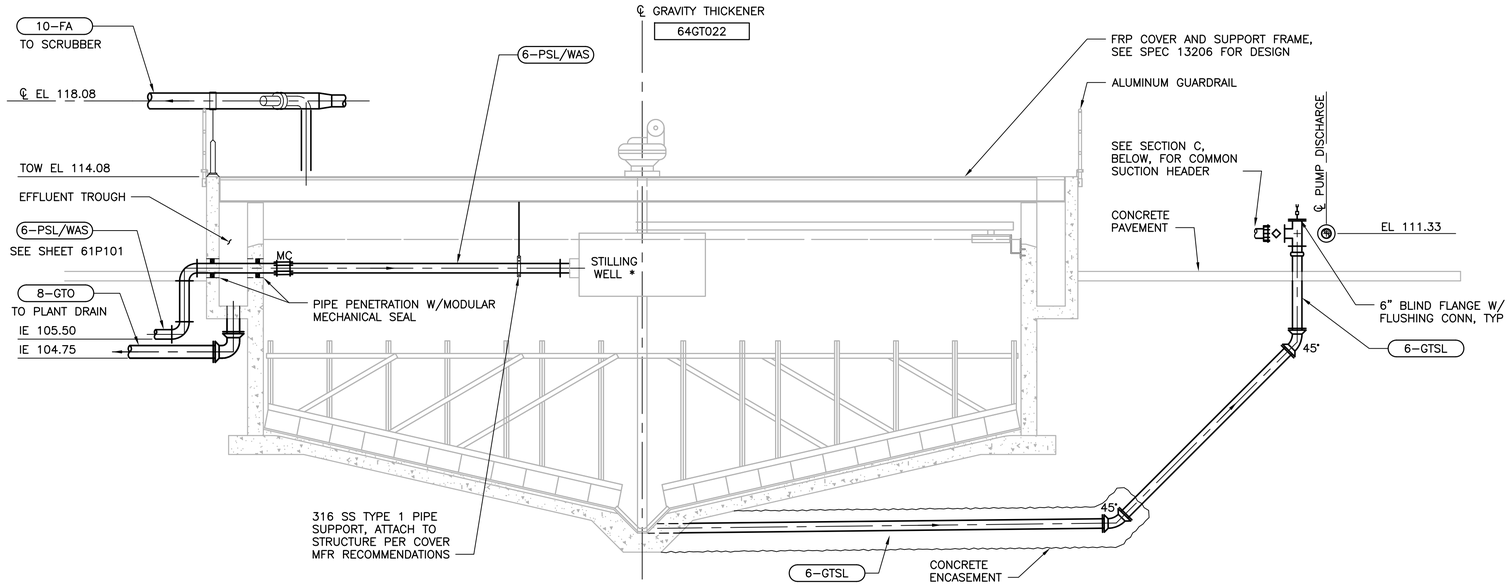


SECTION
1/4" = 1'–0"
B 64P101

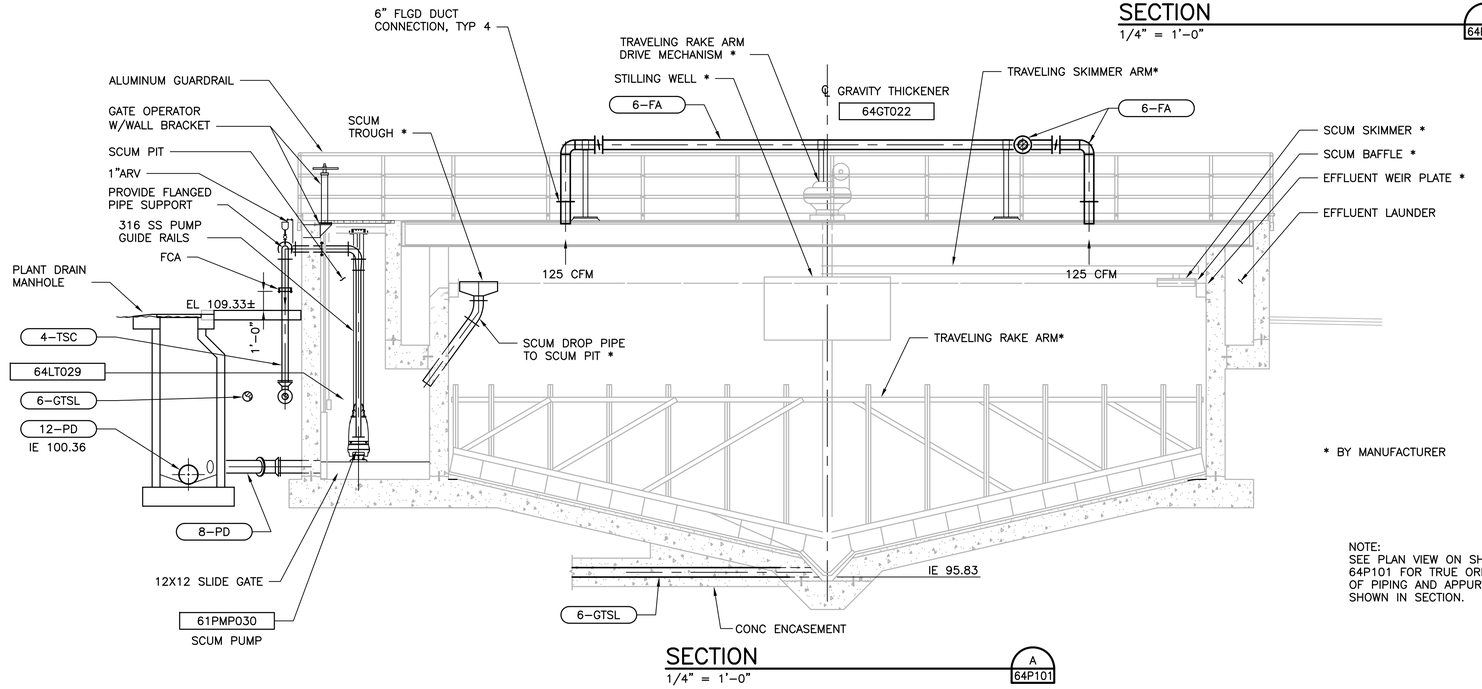


SECTION
1/4" = 1'–0"
A 64P101

* BY MANUFACTURER

NOTE:
SEE PLAN VIEW ON SHEET 64P101 FOR TRUE ORIENTATION OF PIPING AND APPURTENANCES SHOWN IN SECTION.

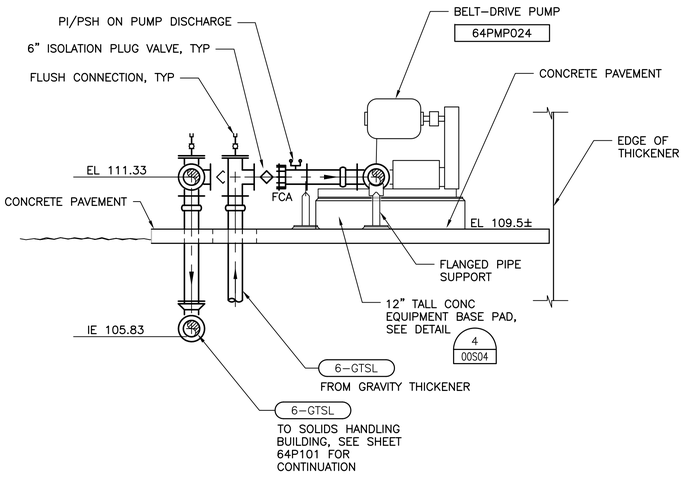


SECTION
3/8" = 1'–0"
C 64P101

FILE: 215786–64P102.dwg
DATE: Oct 07, 2015–4:54:12am, rsnider

HDR Engineering, Inc.

| ISSUE | DATE | DESCRIPTION |
|---|---|---|
| A | JUNE 2015 | ISSUED FOR BID |

| | |
|---|---|
| PROJECT MANAGER | C. OLSON |
| | |
| DESIGNED | T. KONTONICKAS |
| DESIGNED | |
| CHECKED | C. OLSON |
| DRAWN | P. VAN MEURS |
| DATE | JUNE 30, 2015 |
| | |
| PROJECT NUMBER | 215786 |

REGISTERED PROFESSIONAL ENGINEER
THEODORE H. KONTONICKAS
NO. 29378
EXP. 06/30/17
MECHANICAL
STATE OF CALIFORNIA
06-30-15

CITY OF PINOLE CALIFORNIA 1903

PINOLE/HERCULES
WATER POLLUTION
CONTROL PLANT UPGRADE
CLIENT PN

**PROCESS**

**GRAVITY SLUDGE THICKENER SECTIONS**

0 1" 2"

| | |
|---|---|
| FILENAME | 215786–64P102 |
| SCALE | 1/4"=1'–0" |

SHEET **64P102**

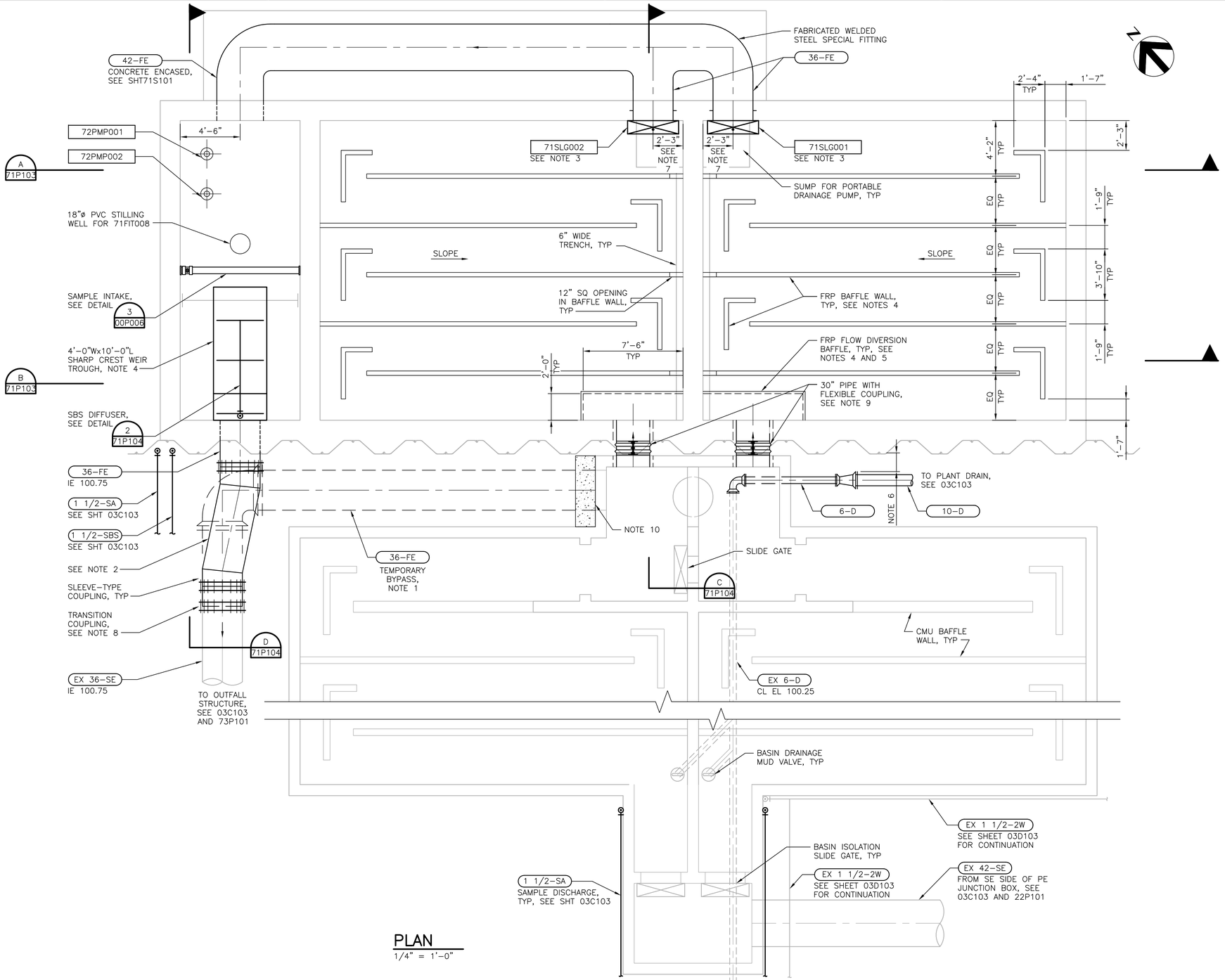


## PLAN
1/4" = 1'–0"

NOTES:

1. SEE CONSTRUCTION SEQUENCING SHEET 00G016 AND SPECIFICATION 01650 FOR CONSTRUCTION CONSTRAINTS.
2. PROVIDE FABRICATED MITERED STEEL FITTING. FIELD VERIFY INVERTS AND LOCATION OF EXISTING PIPE BEFORE ORDERING.
3. INSTALL SLIDE GATE PER MANUFACTURER'S RECOMMENDATIONS.
4. FRP MANUFACTURER TO DESIGN AND SUPPLY ALL MATERIALS FOR FLOW DIVERSION BAFFLE, BAFFLE WALL, AND WEIR TROUGH AND SUPPORTS.
5. PROVIDE PERFORATED FRP TOP COVER WITH A TOTAL OF SIX 2" DIAMETER HOLES, IN LINE AND EQUALLY SPACED.
6. PROVIDE PRACTICAL MINIMUM DISTANCE BETWEEN SHEET PILE AND 10–D PIPE.
7. FIELD LOCATE CAST–IN–PLACE 36–FE WALL PIPE WITH SPECIAL FITTING.
8. EXISTING 36–FE IS ASSUMED TO BE RCP. CONTRACTOR TO FIELD VERIFY.
9. FLEXIBLE COUPLING TO BE DEPEND–O–LOK STYLE 233 COUPLING OR EQUAL WITH EPOXY COATED AND STAINLESS STEEL BOLTS, NUTS, AND WASHERS.
10. PLUG TEMPORARY 36–FE AFTER USE.

FILE: 215786–71P101.dwg
DATE: Oct 07, 2015–4:55:32pm, ranider

HDR Engineering, Inc.

| ISSUE | DATE | DESCRIPTION |
|---|---|---|
| A | JUNE 2015 | ISSUED FOR BID |

| | |
|---|---|
| PROJECT MANAGER | C. OLSON |
| DESIGNED | M. PERINPANAYAGAM |
| DESIGNED | M. BECK |
| CHECKED | C. OLSON |
| DRAWN | M. FOYLE |
| DATE | JUNE 30, 2015 |
| PROJECT NUMBER | 215786 |

REGISTERED PROFESSIONAL ENGINEER
MALAMMAGAL PERINPANAYAGAM
NO. 76120
EXP. 06/30/16
CIVIL
STATE OF CALIFORNIA
04-30-15

CITY OF PINOLE CALIFORNIA 1903

PINOLE/HERCULES
WATER POLLUTION
CONTROL PLANT UPGRADE
CLIENT PN

**PROCESS**

**CHLORINE CONTACT BASINS BOTTOM PLAN**

0 1" 2"

| | |
|---|---|
| FILENAME | 215786–71P101 |
| SCALE | AS NOTED |

SHEET **71P101**

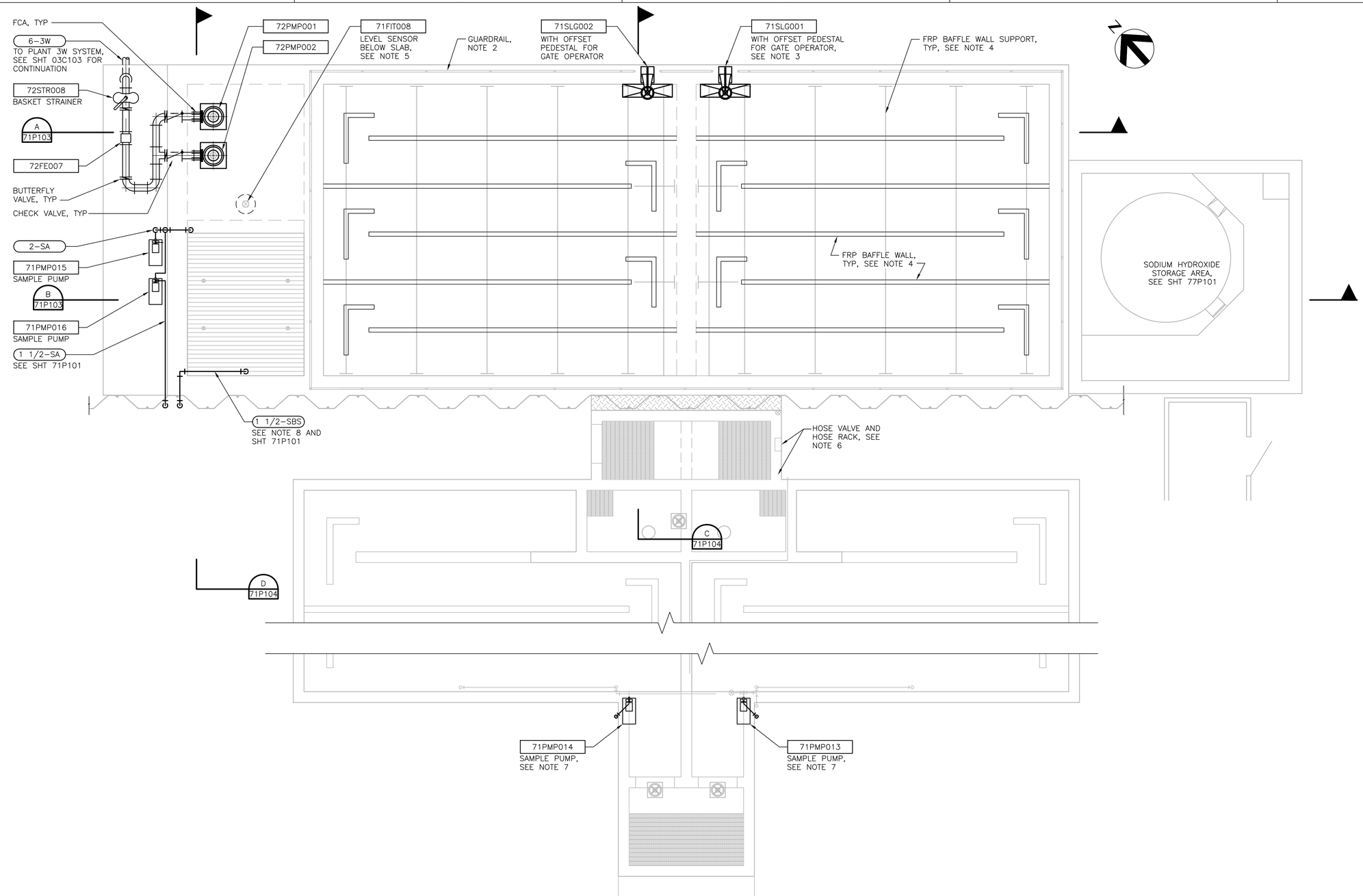


NOTES:

1. SEE CONSTRUCTION SEQUENCING SHEET 00G015 AND SPECIFICATION SECTION 01650 FOR CONSTRUCTION CONSTRAINTS.
2. INSTALL GUARDRAIL AS NECESSARY TO AVOID GATE OPERATOR PEDESTAL.
3. INSTALL SLIDE GATE PER MANUFACTURER'S RECOMMENDATIONS.
4. FRP MANUFACTURER TO DESIGN AND SUPPLY ALL MATERIALS FOR FLOW DIVERSION BAFFLE, BAFFLE WALL, AND WEIR TROUGH AND SUPPORTS.
5. INSTALL ULTRASONIC LEVEL SENSOR PER DETAIL 4 ON SHEET 00P006.
6. RELOCATE EXISTING HOSE RACK AND HOSE VALVE AS REQUIRED.
7. REPLACE EXISTING SAMPLE PUMPS WITH NEW SAMPLE PUMPS AND CONNECT TO EXISTING SUCTION SAMPLE PIPES. PROVIDE NEW DISCHARGE PIPING AS SHOWN.
8. SEE DETAIL 2 ON SHEET 00P006 FOR CONTAINMENT PIPE TERMINATION.

## PLAN

1/4" = 1'-0"

FILE: 215786-71P102.dwg
DATE: Oct 07, 2015-4:55:39pm, ranider

HDR Engineering, Inc.

| ISSUE | DATE | DESCRIPTION |
|---|---|---|
| A | JUNE 2015 | ISSUED FOR BID |

| | |
|---|---|
| PROJECT MANAGER | C. OLSON |
| DESIGNED | M. PERINPANAYAGAM |
| DESIGNED | M. BECK |
| CHECKED | C. OLSON |
| DRAWN | M. FOYLE |
| DATE | JUNE 30, 2015 |
| PROJECT NUMBER | 215786 |

REGISTERED PROFESSIONAL ENGINEER
MALAMMAGAL PERINPANAYAGAM
NO. 76120
EXP. 06/30/16
CIVIL
STATE OF CALIFORNIA
04-30-15

CITY OF PINOLE CALIFORNIA 1903

PINOLE/HERCULES
WATER POLLUTION
CONTROL PLANT UPGRADE
CLIENT PN

**PROCESS**

**CHLORINE CONTACT BASINS TOP PLAN**

0 1" 2"

| | |
|---|---|
| FILENAME | 215786-71P102 |
| SCALE | AS NOTED |

SHEET **71P102**

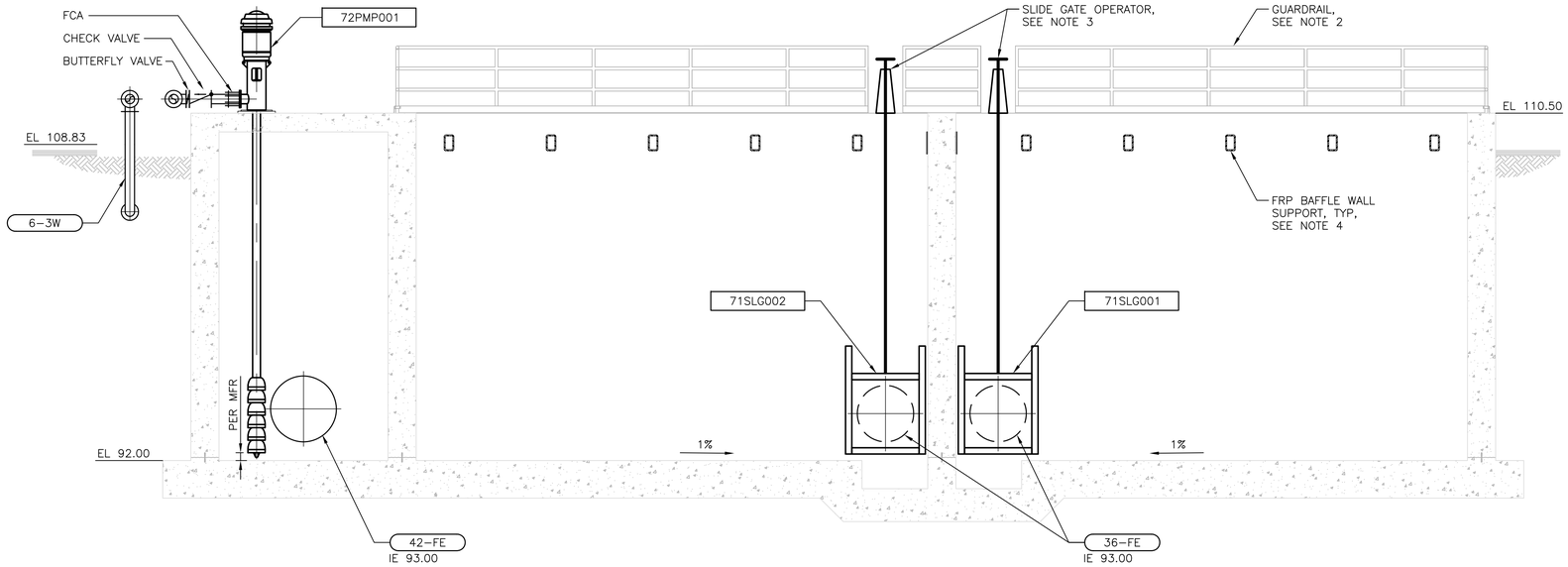


## SECTION
1/4" = 1'-0"

A 71P101

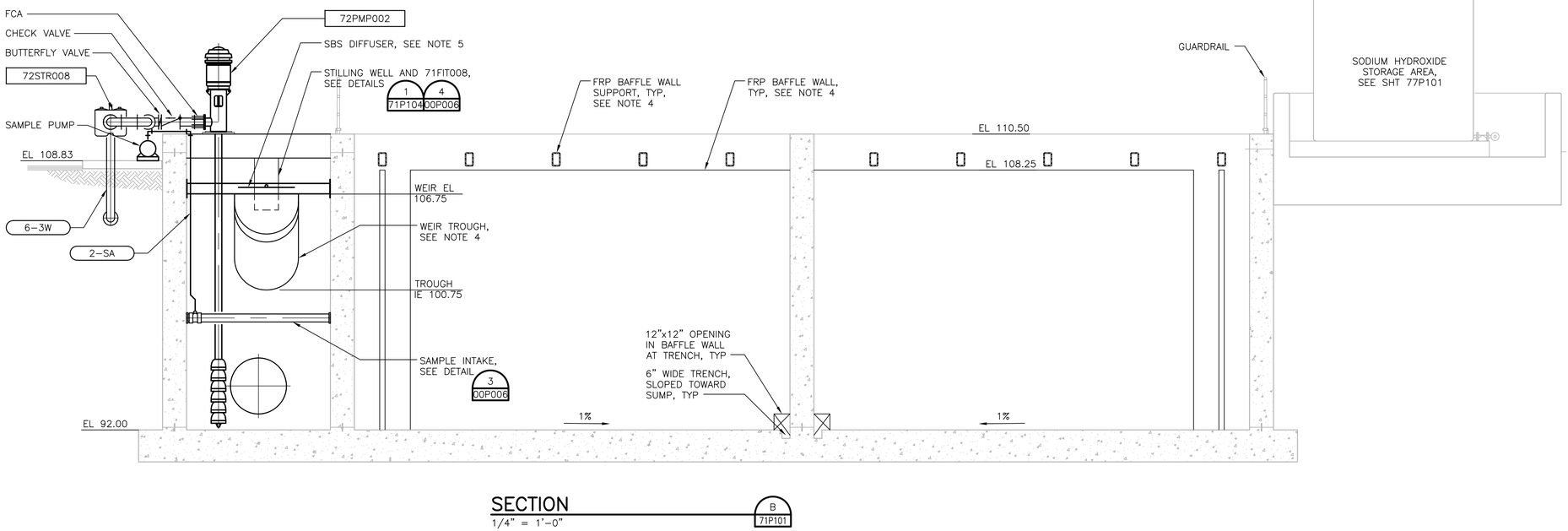


## SECTION
1/4" = 1'-0"

B 71P101

NOTES:

1. SEE CONSTRUCTION SEQUENCING SHEET 00G015 AND SPECIFICATION SECTION 01650 FOR CONSTRUCTION CONSTRAINTS.
2. INSTALL GUARDRAIL AS NECESSARY TO AVOID GATE OPERATOR PEDESTAL.
3. INSTALL SLIDE GATE PER MANUFACTURER'S RECOMMENDATIONS.
4. FRP MANUFACTURER TO DESIGN AND SUPPLY ALL MATERIALS FOR BAFFLE WALLS, WEIR TROUGH, AND ALL SUPPORTS.
5. CONTRACTOR TO DESIGN AND PROVIDE PIPE SUPPORT FOR SBS DIFFUSER PIPING.

FILE: 215786-71P103.dwg
DATE: Oct. 07, 2015-4:55:47pm, rsnider

HDR Engineering, Inc.

| ISSUE | DATE | DESCRIPTION |
|---|---|---|
| A | JUNE 2015 | ISSUED FOR BID |

| | |
|---|---|
| PROJECT MANAGER | C. OLSON |
| DESIGNED | M. PERINPANAYAGAM |
| DESIGNED | M. BECK |
| CHECKED | C. OLSON |
| DRAWN | M. FOYLE |
| DATE | JUNE 30, 2015 |
| PROJECT NUMBER | 215786 |

REGISTERED PROFESSIONAL ENGINEER
MALARMAGAL PERINPANAYAGAM
NO. 76120
EXP. 06/30/16
CIVIL
STATE OF CALIFORNIA
6-30-15

CITY OF PINOLE CALIFORNIA 1903

PINOLE/HERCULES
WATER POLLUTION
CONTROL PLANT UPGRADE
CLIENT PN

**PROCESS**

**CHLORINE CONTACT BASINS SECTIONS**

0 1" 2"

| | |
|---|---|
| FILENAME | 215786-71P103 |
| SCALE | AS NOTED |

SHEET **71P103**

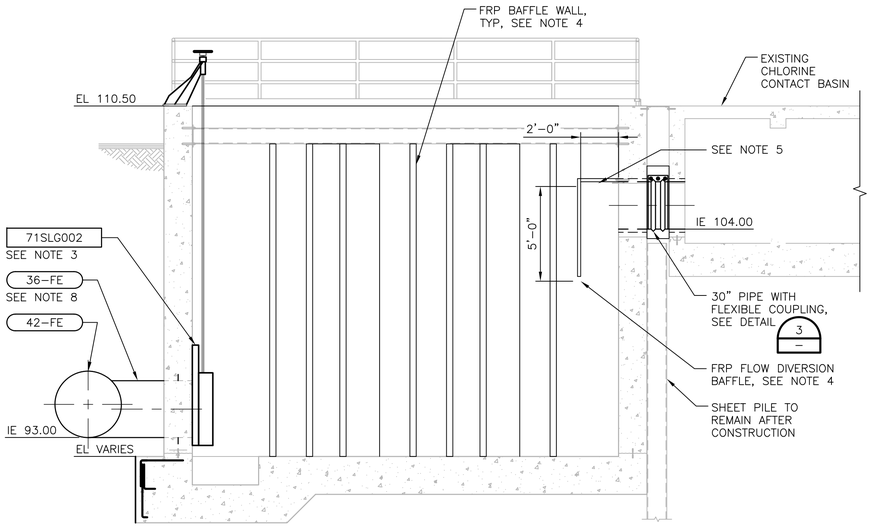


## SECTION
1/4" = 1'-0"
C 71P101

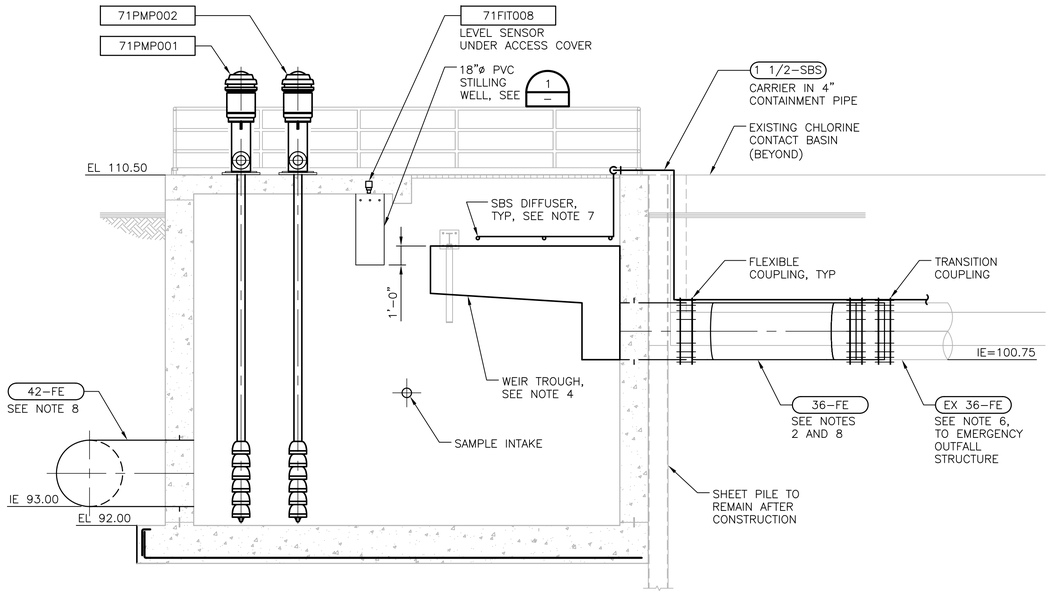


## SECTION
1/4" = 1'-0"
D 71P101

NOTES:

1. SEE CONSTRUCTION SEQUENCING SHEET 00G015 AND SPECIFICATION 01650 FOR CONSTRUCTION CONSTRAINTS.
2. PROVIDE FABRICATED MITERED STEEL FITTING. FIELD VERIFY INVERTS AND LOCATION OF EXISTING PIPE BEFORE ORDERING.
3. INSTALL SLIDE GATE PER MANUFACTURER'S RECOMMENDATIONS.
4. FRP MANUFACTURER TO DESIGN AND SUPPLY ALL MATERIALS FOR FLOW DIVERSION BAFFLE, BAFFLE WALL, AND WEIR TROUGH AND SUPPORTS.
5. PROVIDE PERFORATED FRP TOP COVER WITH A TOTAL OF SIX 2" DIAMETER HOLES, IN LINE AND EQUALLY SPACED.
6. EXISTING 36-FE IS ASSUMED TO BE RCP. CONTRACTOR TO FIELD VERIFY.
7. CONTRACTOR TO DESIGN AND PROVIDE PIPE SUPPORT FOR SBS DIFFUSER PIPING.
8. SEE SPECIFICATION SECTION 01800 FOR OPENINGS AND PENETRATIONS IN WALL.

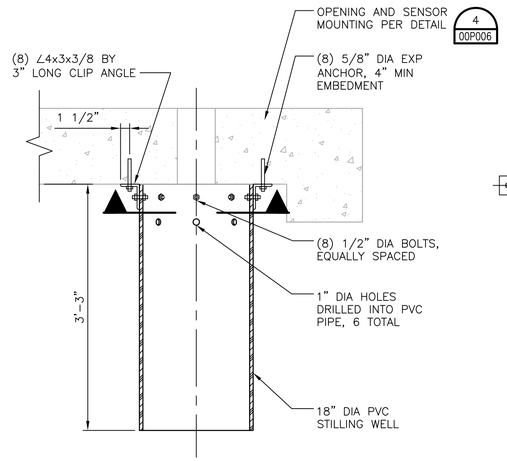


## STILLING WELL MOUNTING DETAIL 1
1" = 1'-0"

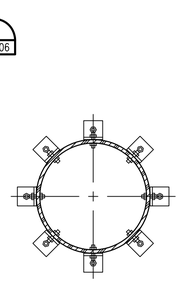

SECTION

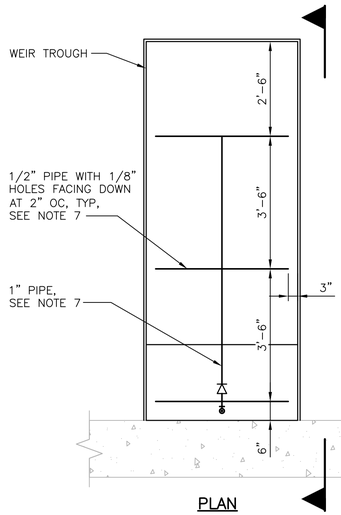


PLAN

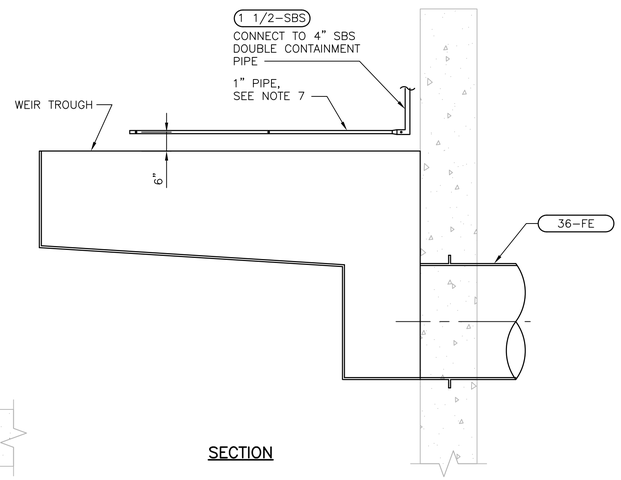


SECTION

## SBS DIFFUSER MOUNTING DETAIL 2
1/2" = 1'-0"
71P101

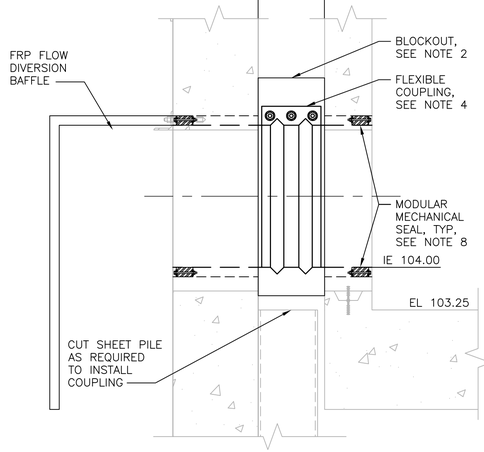


NOTES:

1. SEE SPECIFICATION SECTION 01800 FOR OPENINGS AND PENETRATIONS.
2. BLOCKOUT FOR EXPANSION JOINT, TYPICAL AT TWO LOCATIONS. CONTRACTOR TO DESIGN BLOCKOUT AND FURNISH SUITABLE MATERIAL.
3. ANY FILLING ATTACHED TO EXISTING STRUCTURE THROUGH BLOCKOUT IS NOT ALLOWED.
4. FLEXIBLE COUPLING TO BE DEPEND-O-LOK STYLE 233 COUPLING OR EQUAL WITH EPOXY COATED AND STAINLESS STEEL BOLTS, NUTS, AND WASHERS.

## 30" PIPE INSTALLATION DETAIL 3
3/4" = 1'-0"

FILE: 215786-71P104.dwg
DATE: Oct 07, 2015-4:55:55am, rsnider

HDR Engineering, Inc.

| ISSUE | DATE | DESCRIPTION |
|---|---|---|
| A | JUNE 2015 | ISSUED FOR BID |

| | |
|---|---|
| PROJECT MANAGER | C. OLSON |
| DESIGNED | M. PERINPANAYAGAM |
| DESIGNED | M. BECK |
| CHECKED | C. OLSON |
| DRAWN | M. FOYLE |
| DATE | JUNE 30, 2015 |
| PROJECT NUMBER | 215786 |

REGISTERED PROFESSIONAL ENGINEER MAHARAGAL PERINPANAYAGAM NO. 76120 EXP. 06/30/16 CIVIL STATE OF CALIFORNIA 04-20-15

CITY OF PINOLE CALIFORNIA 1903

PINOLE/HERCULES WATER POLLUTION CONTROL PLANT UPGRADE
CLIENT PN

**PROCESS**

**CHLORINE CONTACT BASINS SECTIONS AND DETAILS**

0 1" 2"

| FILENAME | 215786-71P104 |
|---|---|
| SCALE | AS NOTED |

SHEET **71P104**

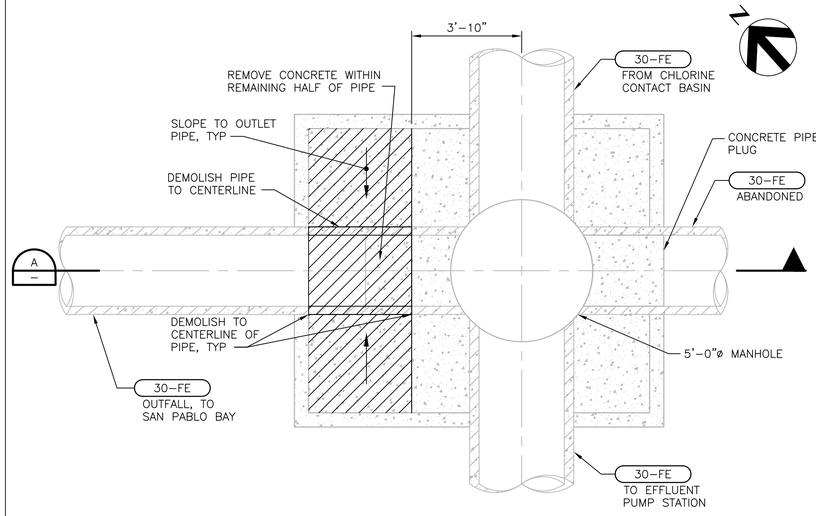


## DEMOLITION BOTTOM PLAN

3/8" = 1'-0"

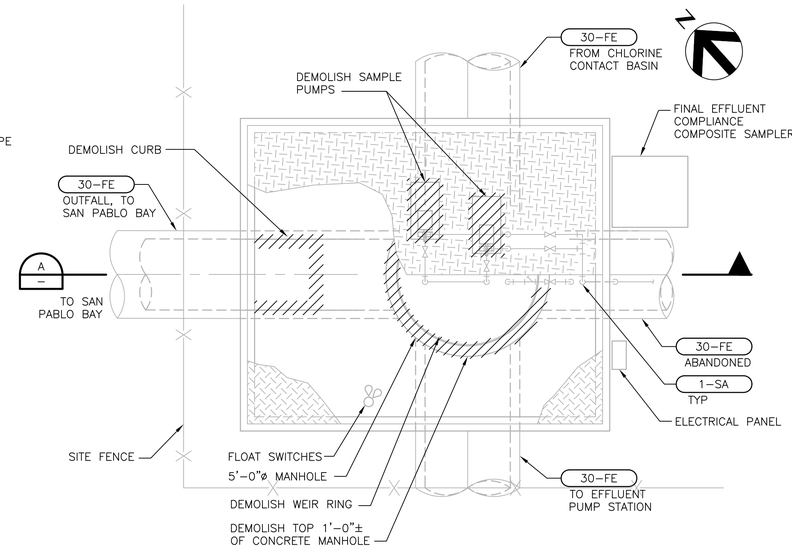


## DEMOLITION TOP PLAN

3/8" = 1'-0"

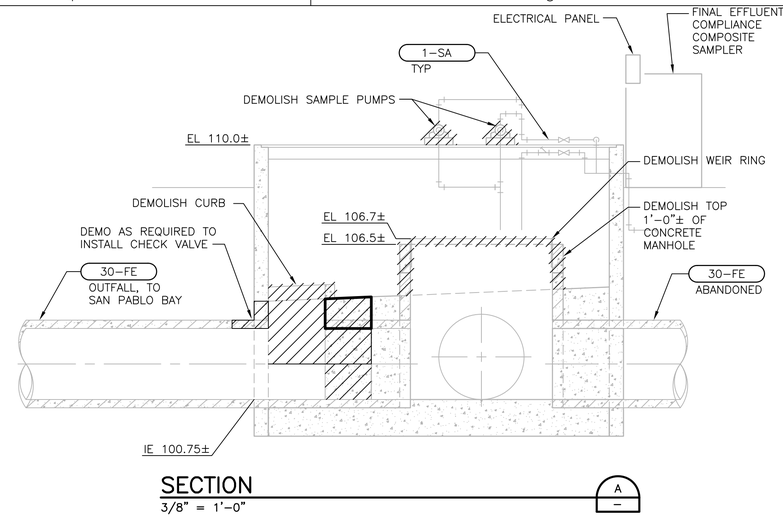


## SECTION

3/8" = 1'-0"

NOTES:

1. DUCK BILL CHECK VALVE: SPECIAL ORDER VALVE WITH REDUCED VALVE LENGTH TO FACILITATE INSTALLATION, COORDINATE WITH MANUFACTURER AS REQUIRED.
2. PROVIDE CIRCULAR FRP WEIR WITH SEPARATE FULLY ADJUSTABLE WEIR PLATE (3INCH MINIMUM ADJUSTABILITY), ½" MINIMUM THICKNESS. ALL HARDWARE TO BE 316L STAINLESS STEEL. MANUFACTURER TO SPECIFY NUMBER AND LOCATION OF ANCHORS. GROUT AND SEAL PER MANUFACTURERS INSTRUCTIONS TO PROVIDE A WATER TIGHT SEAL.

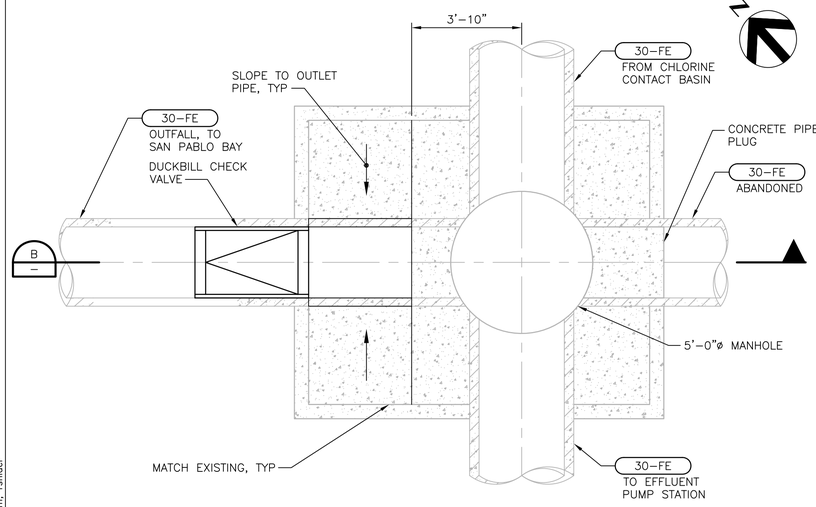


## MODIFIED BOTTOM PLAN

3/8" = 1'-0"

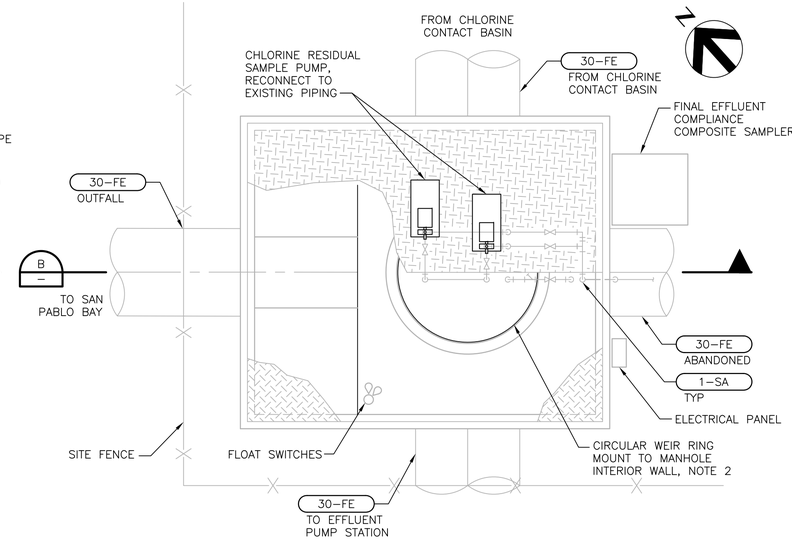


## MODIFIED TOP PLAN

3/8" = 1'-0"

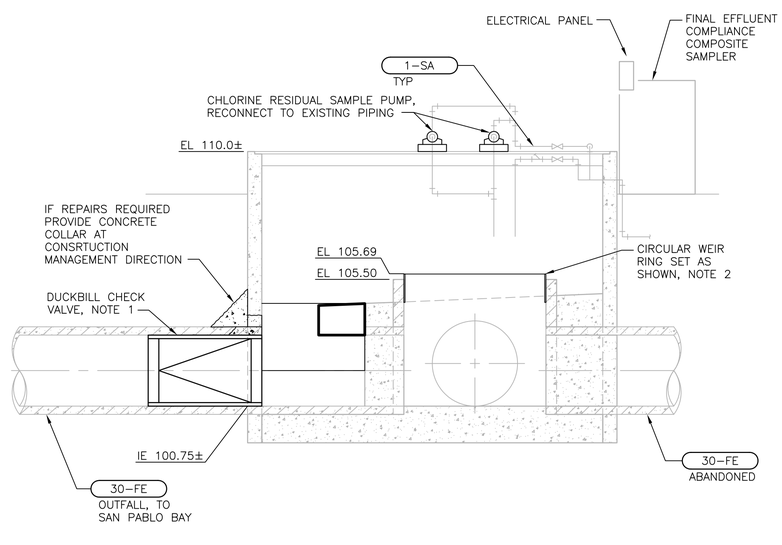


## SECTION

3/8" = 1'-0"

FILE: 215786-73P101.dwg
DATE: Oct 07, 2015-4:56:01am, rsnider

HDR Engineering, Inc.

| ISSUE | DATE | DESCRIPTION |
|---|---|---|
| A | JUNE 2015 | ISSUED FOR BID |

| | |
|---|---|
| PROJECT MANAGER | C. OLSON |
| DESIGNED | M. PERINPANAYAGAM |
| DESIGNED | |
| CHECKED | C. OLSON |
| DRAWN | M. FOYLE |
| DATE | JUNE 30, 2015 |
| PROJECT NUMBER | 215786 |

REGISTERED PROFESSIONAL ENGINEER
MALARMAGAL PERINPANAYAGAM
NO. 76120
EXP. 06/30/16
CIVIL
STATE OF CALIFORNIA
06-30-15

CITY OF PINOLE CALIFORNIA 1903

PINOLE/HERCULES
WATER POLLUTION
CONTROL PLANT UPGRADE
CLIENT PN

**PROCESS**

**EXISTING EMERGENCY OUTFALL STRUCTURE MODIFICATIONS**

0 1" 2"

| | |
|---|---|
| FILENAME | 215786-73P101 |
| SCALE | AS NOTED |

SHEET **73P101**

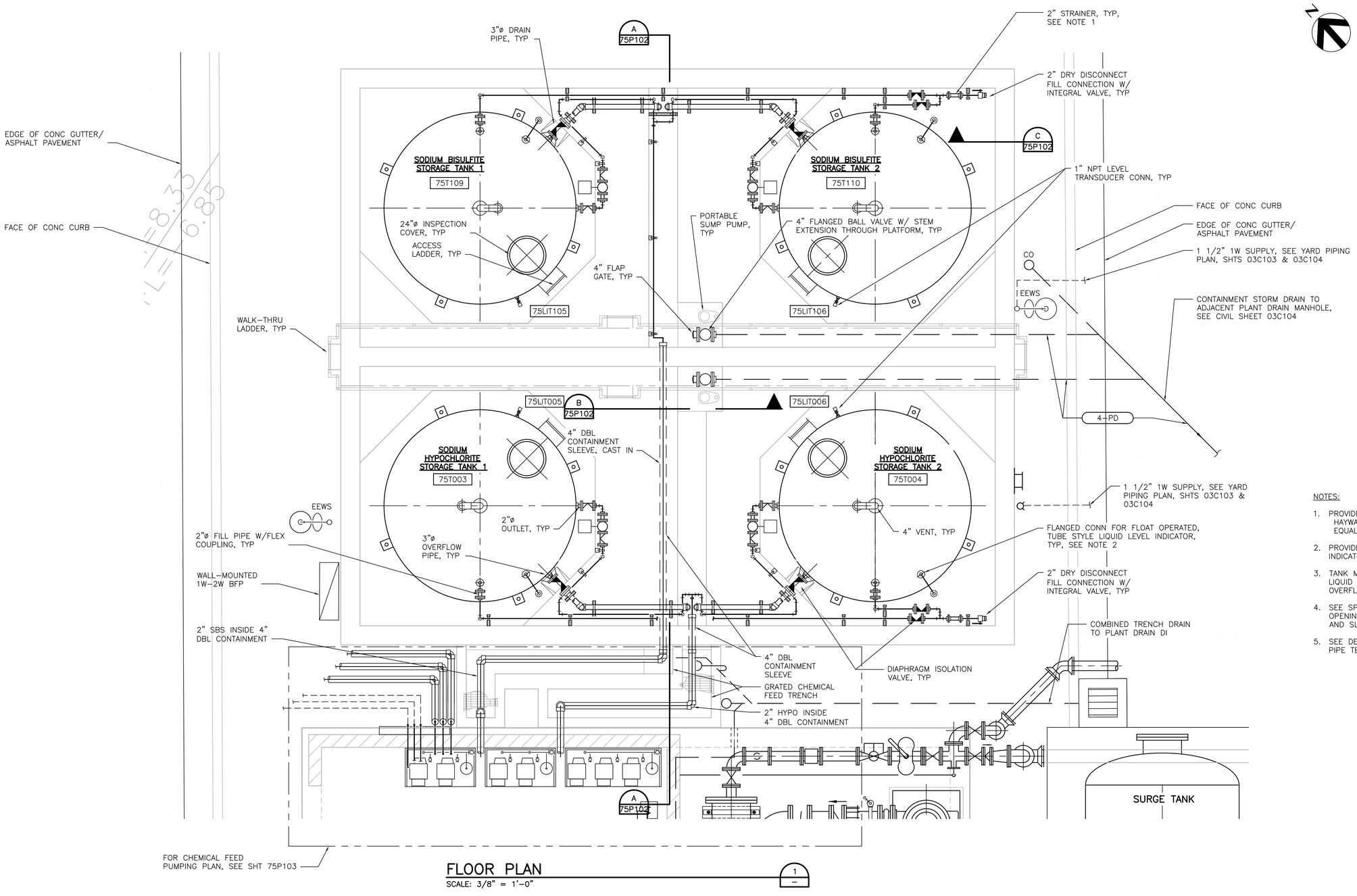


## FLOOR PLAN

SCALE: 3/8" = 1'-0"

1

NOTES:

1. PROVIDE BASKET STRAINER: HAYWARD SB SERIES SIMPLEX BASKET STRAINER OR EQUAL, 2-INCH PVC AND INLINE CONNECTIONS.
2. PROVIDE FLOAT OPERATED, TUBE STYLE LIQUID LEVEL INDICATOR AT ALL CHEMICAL TANKS.
3. TANK MANUFACTURER TO PROVIDE SUPPORTS FOR LIQUID LEVEL INDICATOR TUBE, TANK FILL PIPE, TANK OVERFLOW, AND TANK LADDER.
4. SEE SPECIFICIATIONS SECTION 01800 FOR PIPE OPENINGS AND PENETRATIONS THROUGH WALL, FLOOR AND SLABS.
5. SEE DETAIL 2 ON SHEET 00P006 FOR CONTAINMENT PIPE TERMINATIONS.

FILE: 215786-75P101.dwg
DATE: Oct 07, 2015-4:56:49am, rsnider

HDR Engineering, Inc.

| ISSUE | DATE | DESCRIPTION |
|---|---|---|
| A | JUNE 2015 | ISSUED FOR BID |

| | |
|---|---|
| PROJECT MANAGER | C. OLSON |
| DESIGNED | M. PERINPANAYAGAM |
| DESIGNED | |
| CHECKED | C. OLSON |
| DRAWN | P. VAN MEURS |
| DATE | JUNE 30, 2015 |
| PROJECT NUMBER | 215786 |

REGISTERED PROFESSIONAL ENGINEER
MALARMAGAL PERINPANAYAGAM
NO. 76120
EXP. 06/30/16
CIVIL
STATE OF CALIFORNIA
06-30-15

CITY OF PINOLE CALIFORNIA 1903

PINOLE/HERCULES
WATER POLLUTION
CONTROL PLANT UPGRADE
CLIENT PN

**PROCESS CHEMICAL STORAGE FLOOR PLAN**

0 1" 2"

| | |
|---|---|
| FILENAME | 215786-75P101 |
| SCALE | AS NOTED |

SHEET **75P101**

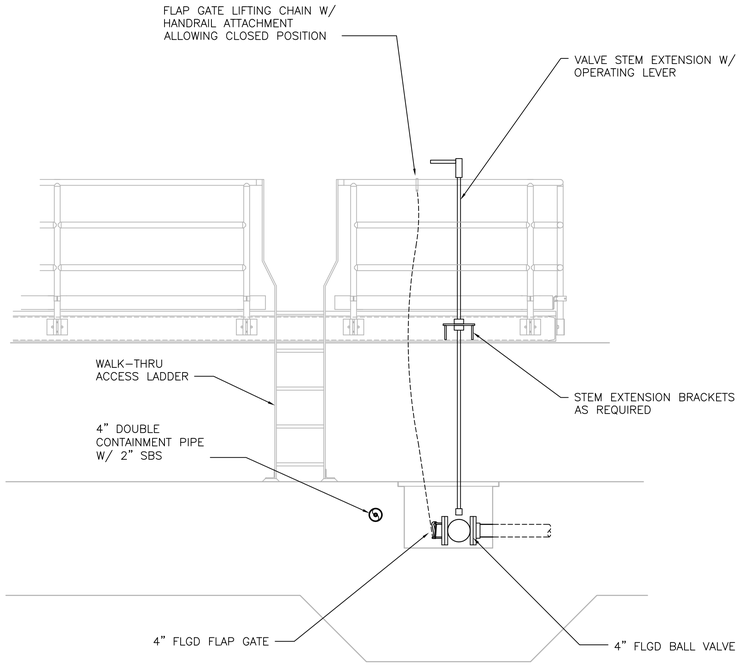


## SECTION
SCALE: 1/2" = 1'-0"

B 75P101

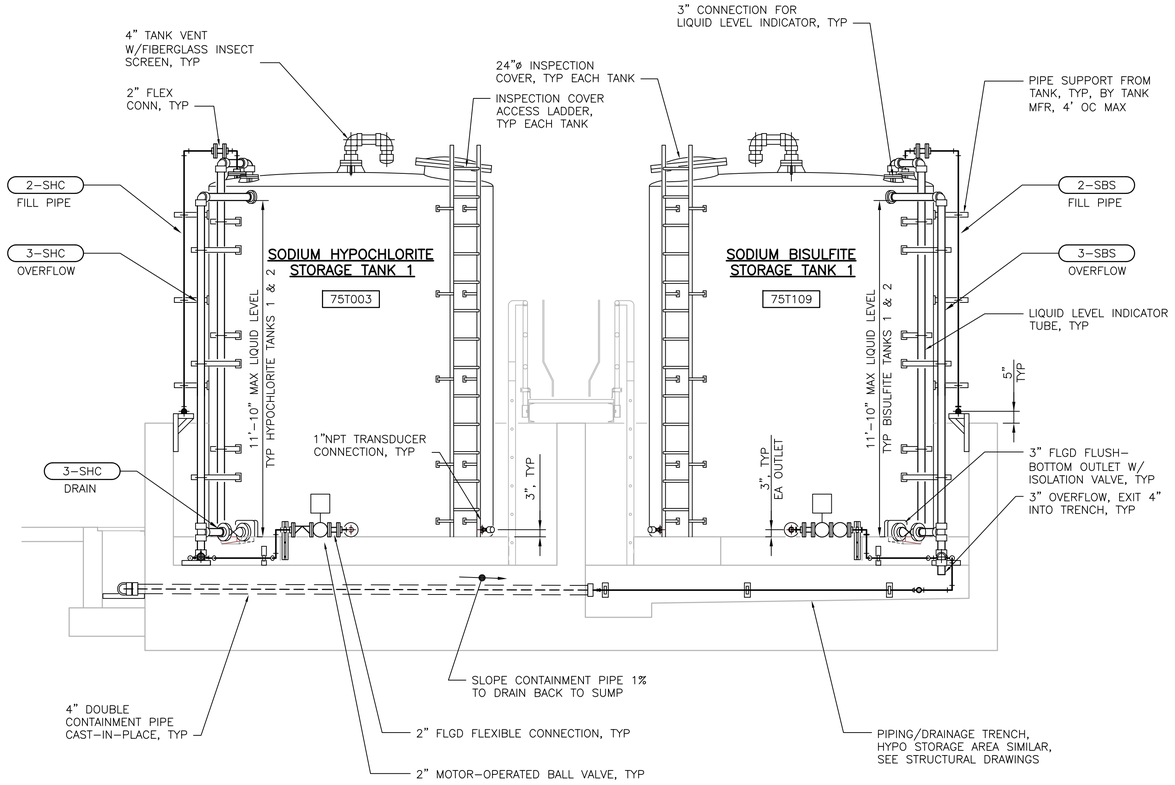


## SECTION
SCALE: 3/8" = 1'-0"

A 75P101

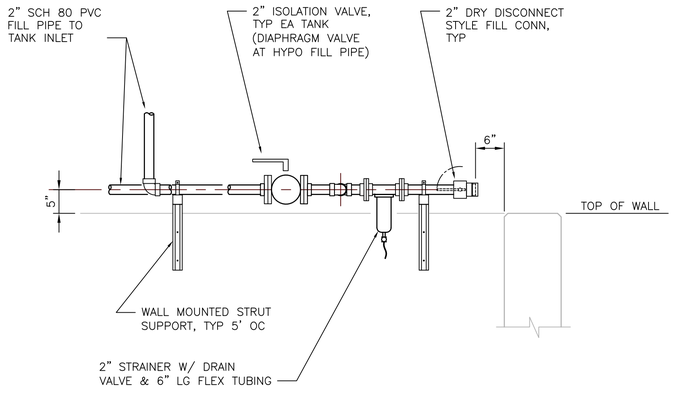


## SECTION
SCALE: 3/4" = 1'-0"

C 75P101

NOTES:

1. SEE STRUCTURAL DRAWINGS 75S101 THROUGH 75S104 FOR TOP OF PAD & TOP OF WALL ELEVATIONS.
2. SEE DETAIL 2 ON SHEET 00P006 FOR CONTAINMENT PIPE TERMINATION.

FILE: 215786-75P102.dwg
DATE: Oct 07, 2015-4:56:59pm, rsnider

HDR Engineering, Inc.

| ISSUE | DATE | DESCRIPTION |
|---|---|---|
| A | JUNE 2015 | ISSUED FOR BID |

| | |
|---|---|
| PROJECT MANAGER | C. OLSON |
| DESIGNED | M. PERINPANAYAGAM |
| DESIGNED | |
| CHECKED | C. OLSON |
| DRAWN | P. VAN MEURS |
| DATE | JUNE 30, 2015 |
| PROJECT NUMBER | 215786 |

REGISTERED PROFESSIONAL ENGINEER MALARMAGAL PERINPANAYAGAM NO. 76120 EXP. 06/30/16 CIVIL STATE OF CALIFORNIA 6-30-15

CITY OF PINOLE CALIFORNIA 1903

PINOLE/HERCULES WATER POLLUTION CONTROL PLANT UPGRADE CLIENT PN

**PROCESS**

**CHEMICAL STORAGE SECTIONS 1**

0 1" 2"

| | |
|---|---|
| FILENAME | 215786-75P102 |
| SCALE | AS NOTED |

SHEET **75P102**

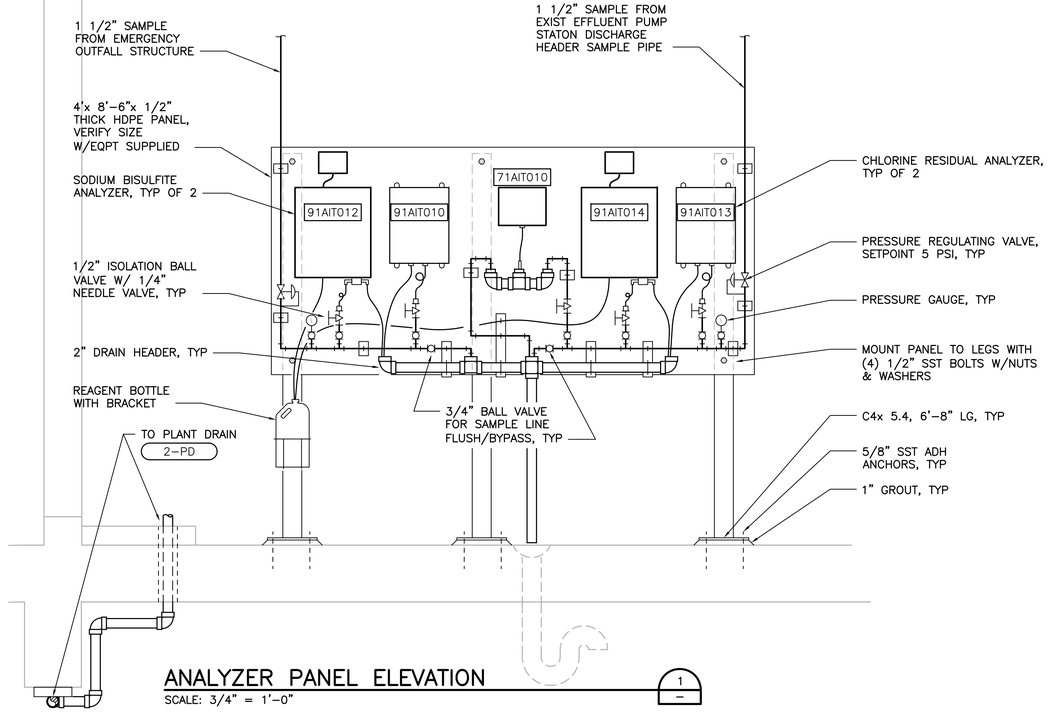


## ANALYZER PANEL ELEVATION

SCALE: 3/4" = 1'-0"

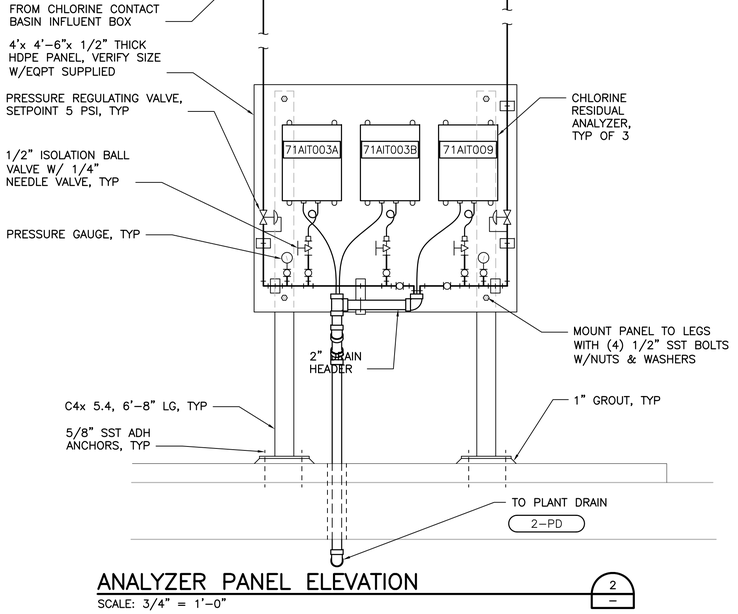


## ANALYZER PANEL ELEVATION

SCALE: 3/4" = 1'-0"

NOTES:

1. PROVIDE WALL PENETRATIONS PER SECTION 01800.
2. SEE DETAIL 2 ON SHEET 00P006 FOR DOUBLBE/SINGLE WALL PIPE TRANSITIONS.
3. RUN SAMPLE PIPES TO ANALYZERS AND SUPPORT FROM CEILING. SEE SECTION 15090 FOR PIPE SUPPORTS.
4. PROVIDE FLEXIBLE COUPLING OUTSIDE OF BUILDING ON PIPES THAT ENTER AND EXIT EXISTING BUILDING.
5. CHEMICAL CARRIER PIPE IN DOUBLE CONTAINMENT PIPE:
   A. 3/4-SHC TO RAS CHLORINATION
   B. 1-SHC TO PRIMARY EFFLUENT JUNCTION BOX INDUCTION UNIT.
   C. 1 1/2-SBS TO CHLORINE CONTACT BASIN EFFLUENT BOX.
6. ROUTE COMBINED DRAIN PIPES FROM ANALYZERS THROUGH FLOOR, EXITING WETWELL AT PENETRATION THROUGH NORTH WALL AND ROUTING TO STORM DRAIN STD DI8.
7. ALL METERING PUMPS ARE PACKAGED SKIDS BY MANUFACTURER. SEE SPECIFICATION SECTION 11932.
8. CHEMICAL PIPING LAYOUT AND DETAILS ARE NOT SHOWN. CONTRACTOR TO CONNECT CHEMICAL SUCTION/DISCHARGE PIPES TO METERING PUMPS AS SHOWN ON P&ID'S, AND PROVIDE CHEMICAL PIPING LAYOUT AND ELEVATION VIEWS FOR ENGINEER'S APPROVAL.
9. MOUNT METERING PUMP SKIDS TO EXISTING CONCRETE PAD. CONTRACTOR TO COORDINATE WITH METERING PUMP MANUFACTURER FOR SKID DIMENSIONS PRIOR TO ORDERING.
10. CONNECT BISULFITE METERING PUMP DISCHARGE TO EXISTING PIPE PER NOTE 3, SHEET 91D101

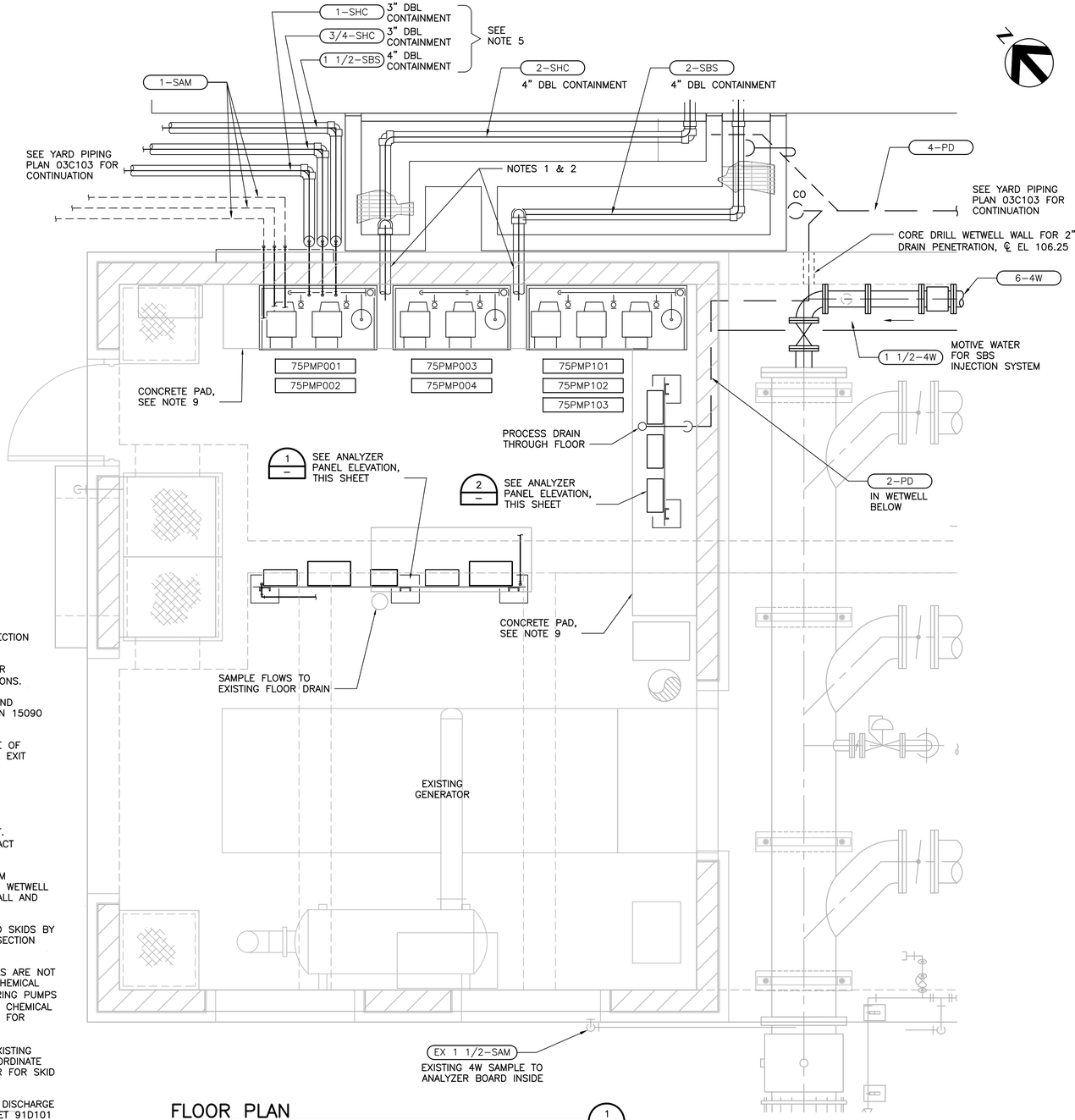


## FLOOR PLAN

SCALE: 1/2" = 1'-0"

FILE: 215786-75P103.dwg
DATE: Oct 07, 2015-4:57:09pm, rsnider

HDR Engineering, Inc.

| ISSUE | DATE | DESCRIPTION |
|---|---|---|
| A | JUNE 2015 | ISSUED FOR BID |

| | |
|---|---|
| PROJECT MANAGER | C. OLSON |
| | |
| DESIGNED | M. PERINPANAYAGAM |
| DESIGNED | |
| CHECKED | C. OLSON |
| DRAWN | P. VAN MEURS |
| DATE | JUNE 30, 2015 |
| | |
| PROJECT NUMBER | 215786 |

REGISTERED PROFESSIONAL ENGINEER MALKANTHI PERINPANAYAGAM NO. 76120 EXP. 06/30/16 CIVIL STATE OF CALIFORNIA

04-30-B

CITY OF PINOLE CALIFORNIA 1903

PINOLE/HERCULES
WATER POLLUTION
CONTROL PLANT UPGRADE
CLIENT PN

**PROCESS**
**CHEMICAL FEED**
**PUMPING AND ANALYZER ROOM**
**PLAN AND ELEVATIONS**

0 1" 2"

| | |
|---|---|
| FILENAME | 215786-75P103 |
| SCALE | AS NOTED |

SHEET **75P103**

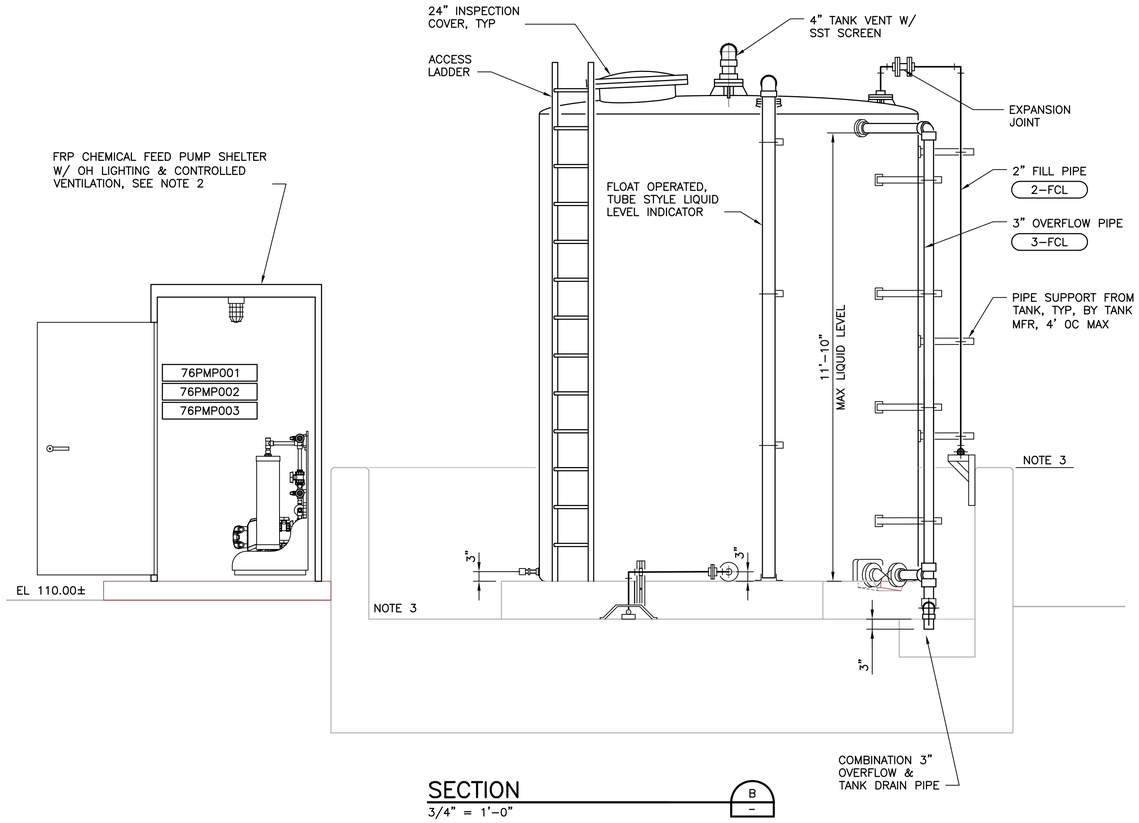


SECTION
3/4" = 1'-0"

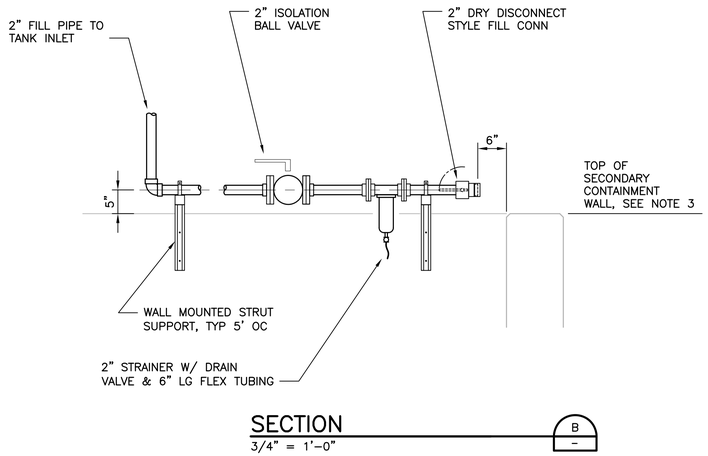


SECTION
3/4" = 1'-0"

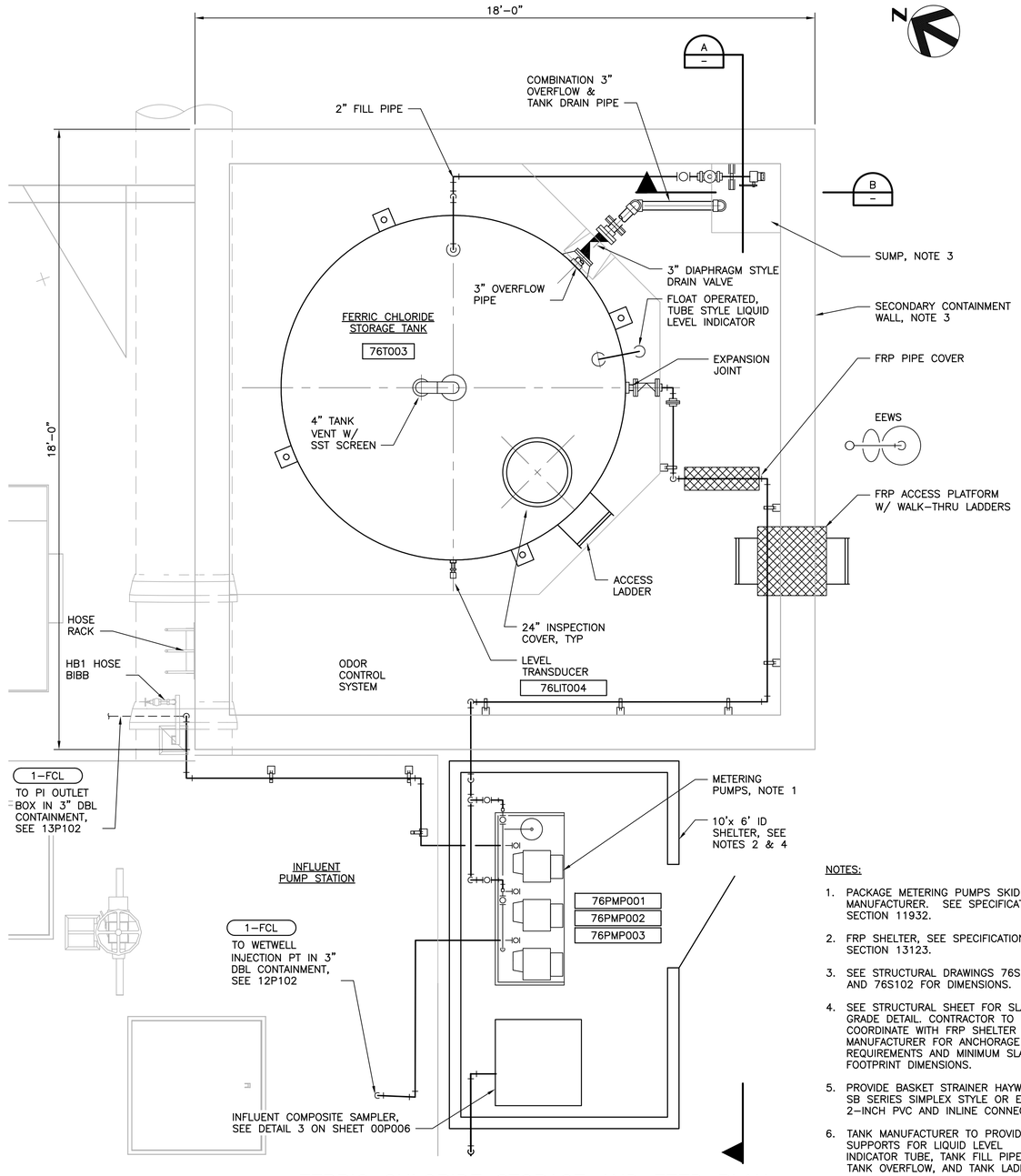


FERRIC CHLORIDE STORAGE AND FEED PLAN
1/2" = 1'-0"

NOTES:

1. PACKAGE METERING PUMPS SKID BY MANUFACTURER. SEE SPECIFICATIONS SECTION 11932.
2. FRP SHELTER, SEE SPECIFICATIONS SECTION 13123.
3. SEE STRUCTURAL DRAWINGS 76S101 AND 76S102 FOR DIMENSIONS.
4. SEE STRUCTURAL SHEET FOR SLAB ON GRADE DETAIL. CONTRACTOR TO COORDINATE WITH FRP SHELTER MANUFACTURER FOR ANCHORAGE REQUIREMENTS AND MINIMUM SLAB FOOTPRINT DIMENSIONS.
5. PROVIDE BASKET STRAINER HAYWARD SB SERIES SIMPLEX STYLE OR EQUAL, 2-INCH PVC AND INLINE CONNECTION.
6. TANK MANUFACTURER TO PROVIDE SUPPORTS FOR LIQUID LEVEL INDICATOR TUBE, TANK FILL PIPE, TANK OVERFLOW, AND TANK LADDER.
7. SEE DETAIL 2 ON SHEET 00P006 FOR CONTAINMENT PIPE TERMINATION.

FILE: 215786-76P101.dwg
DATE: Oct 07, 2015-4:57:31pm, rsnider

HDR Engineering, Inc.

| ISSUE | DATE | DESCRIPTION |
|---|---|---|
| A | JUNE 2015 | ISSUED FOR BID |

| | |
|---|---|
| PROJECT MANAGER | C. OLSON |
| DESIGNED | M. PERINPANAYAGAM |
| DESIGNED | |
| CHECKED | C. OLSON |
| DRAWN | P. VAN MEURS |
| DATE | JUNE 30, 2015 |
| PROJECT NUMBER | 215786 |

REGISTERED PROFESSIONAL ENGINEER
MAHANGAL PERINPANAYAGAM
NO. 76120
EXP. 06/30/16
CIVIL
STATE OF CALIFORNIA
06-30-15

CITY OF PINOLE CALIFORNIA 1903

PINOLE/HERCULES
WATER POLLUTION
CONTROL PLANT UPGRADE
CLIENT PN

**PROCESS**

**FERRIC CHLORIDE CHEMICAL STORAGE AND FEED PLAN**

0 1" 2"

| | |
|---|---|
| FILENAME | 215786-76P101 |
| SCALE | AS NOTED |

SHEET
**76P101**

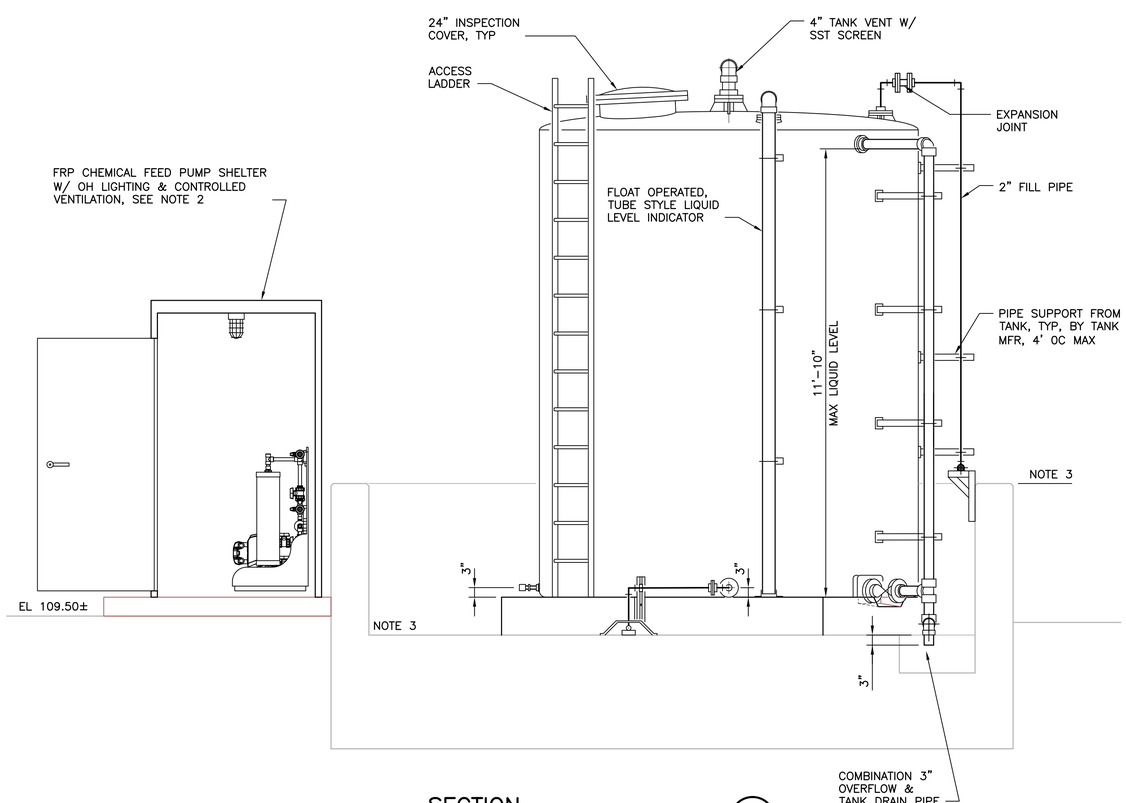


## SECTION
3/4" = 1'-0"

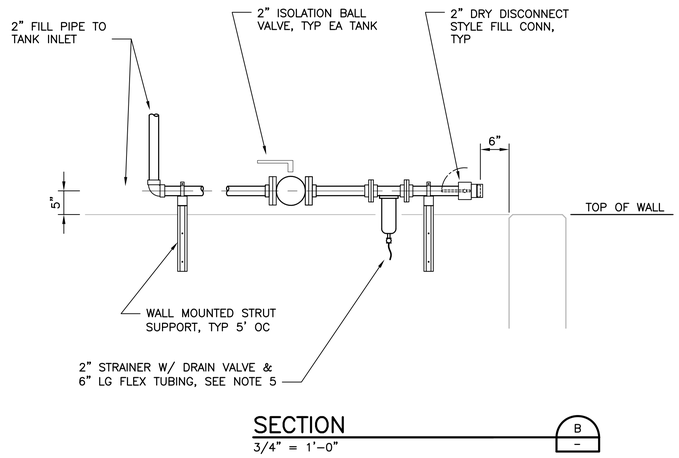


## SECTION
3/4" = 1'-0"

NOTES:

1. PACKAGE METERING PUMPS SKID BY MANUFACTURER. SEE SPECIFICATIONS SECTION 11932.
2. FRP SHELTER, SEE SPECIFICATIONS SECTION 13123.
3. SEE STRUCTURAL DRAWINGS 77S101 AND 77S102 FOR DIMENSIONS.
4. SEE STRUCTURAL SHEET FOR SLAB ON GRADE DETAIL. CONTRACTOR TO COORDINATE WITH FRP SHELTER MANUFACTURER FOR ANCHORAGE REQUIREMENTS AND MINIMUM SLAB FOOTPRINT DIMENSIONS.
5. PROVIDE BASKET STRAINER HAYWARD SB SERIES SIMPLEX STYLE OR EQUAL, 2-INCH PVC AND INLINE CONNECTION.
6. TANK MANUFACTURER TO PROVIDE SUPPORTS FOR LIQUID LEVEL INDICATOR TUBE, TANK FILL PIPE, TANK OVERFLOW, AND TANK LADDER.
7. SEE DETAIL 2 ON SHEET 00P006 FOR CONTAINMENT PIPE TERMINATION.

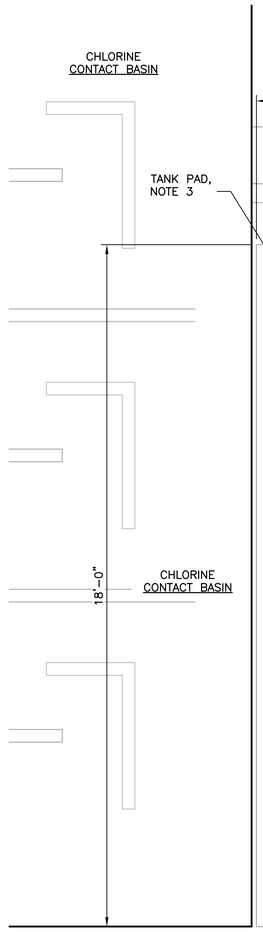


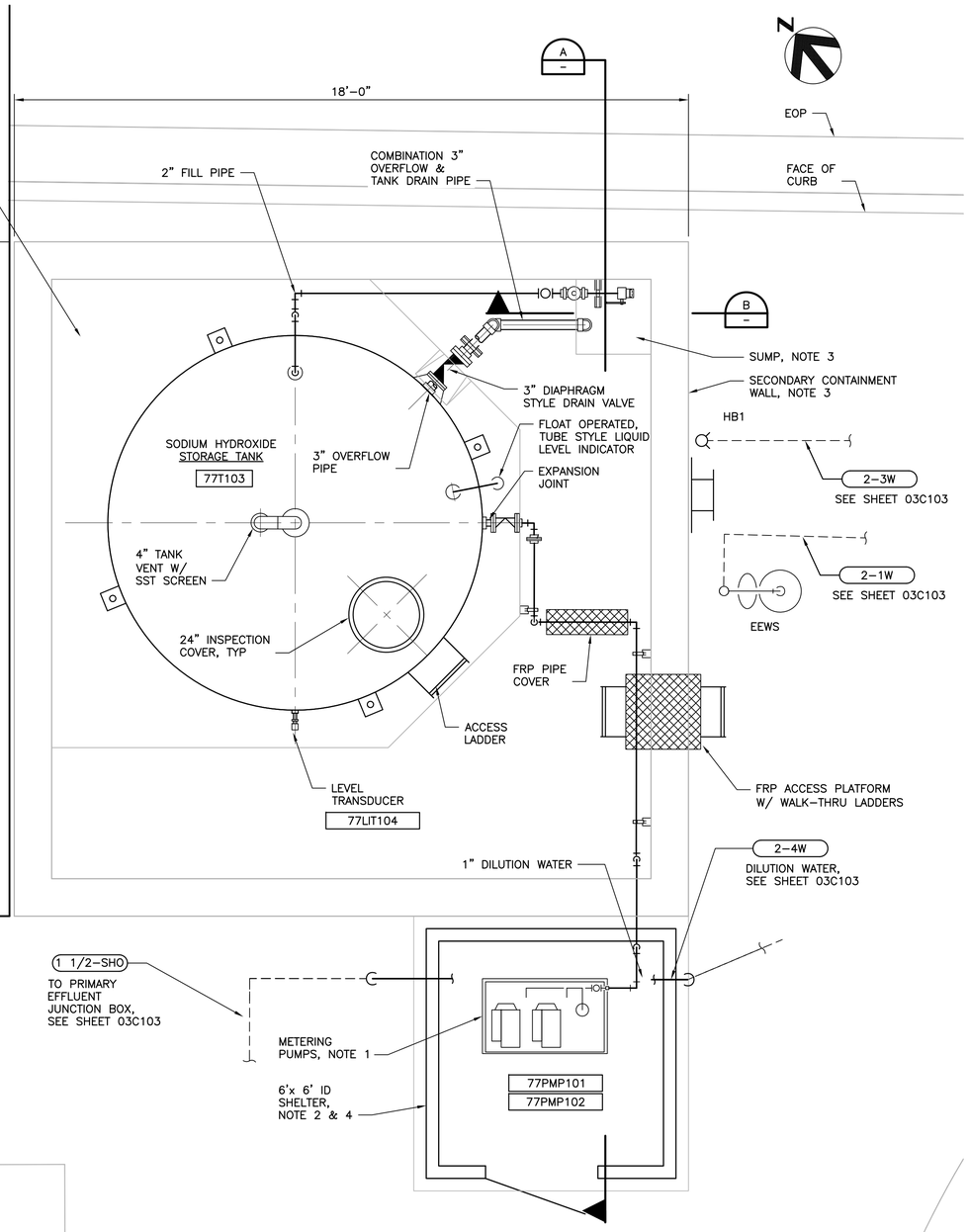


## SODIUM HYDROXIDE STORAGE/FEED PLAN
1/2" = 1'-0"

| ISSUE | DATE | DESCRIPTION |
|---|---|---|
| | | |
| | | |
| | | |
| | | |
| | | |
| | | |
| A | JUNE 2015 | ISSUED FOR BID |

| | |
|---|---|
| PROJECT MANAGER | C. OLSON |
| | |
| DESIGNED | M. PERINPANAYAGAM |
| DESIGNED | |
| CHECKED | C. OLSON |
| DRAWN | P. VAN MEURS |
| DATE | JUNE 30, 2015 |
| | |
| PROJECT NUMBER | 215786 |

REGISTERED PROFESSIONAL ENGINEER
CRAIG A. OLSON
NO. 39819
EXP. 12/31/15
CIVIL
STATE OF CALIFORNIA
06-30-15

HDR Engineering, Inc.

CITY OF PINOLE CALIFORNIA 1903

PINOLE/HERCULES
WATER POLLUTION
CONTROL PLANT UPGRADE
CLIENT PN

**PROCESS**

**SODIUM HYDROXIDE CHEMICAL STORAGE AND FEED PLAN**

0 1" 2"

| | |
|---|---|
| FILENAME | 215786-77P101 |
| SCALE | AS NOTED |

SHEET **77P101**

FILE: 215786-77P101.dwg
DATE: Oct 07, 2015-4:57:52am rsnider

NOTES:

1. ABOVE GROUND PIPING, EQUIPMENT AND ELECTRICAL PORTIONS OF DIGESTER GAS BURNER SYSTEM ARE RELOCATED FROM EXISTING LOCATION, SEE SHEET 85D101. REFER TO CONTRACTOR GENERATED AS–BUILT OF EXISTING SYSTEM (PRIOR TO DISASSEMBLY) AND SHEET 85S101, 85E101 AND 85I101 FOR COMPLETE ASSEMBLY. SYSTEM TO BE REASSEMBLED AND WIRED TO FUNCTION AS IT WAS PRIOR TO DISASSEMBLY.
2. REPLACE GASKETS ON ALL FLANGED CONNECTIONS DISASSEMBLED FOR RELOCATION.

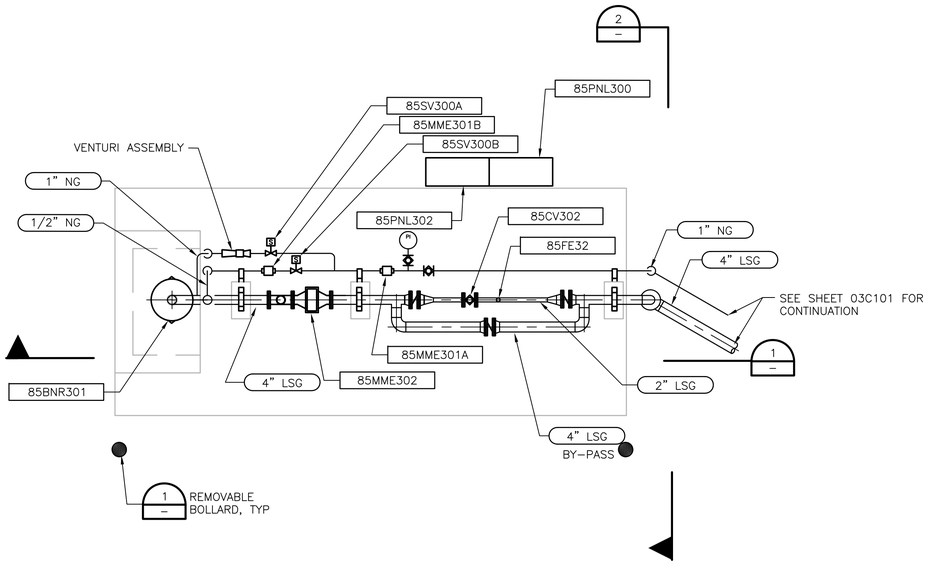


## RELOCATED DIGESTER GAS BURNER PLAN

3/8" = 1'–0"

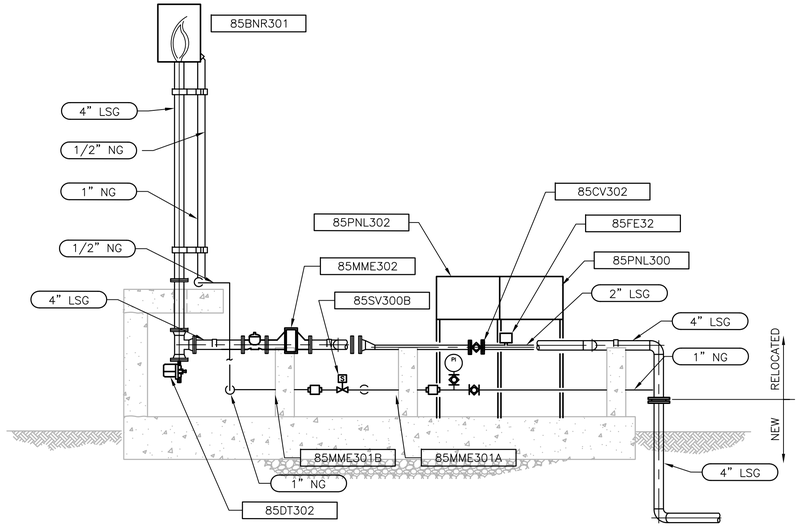


## SECTION 1

3/8" = 1'–0"

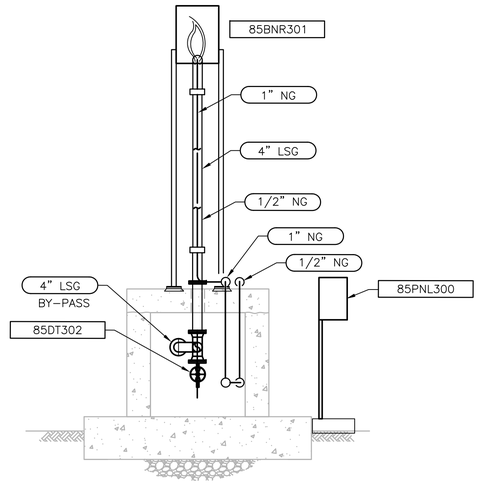


## SECTION 2

3/8" = 1'–0"

FILE: 215786–85P101.dwg
DATE: Oct. 07, 2015–5:00:53am, rsnider

HDR Engineering, Inc.

| ISSUE | DATE | DESCRIPTION |
|---|---|---|
| A | JUNE 2015 | ISSUED FOR BID |

| | |
|---|---|
| PROJECT MANAGER | C. OLSON |
| DESIGNED | T. KONTONICKAS |
| DESIGNED | |
| CHECKED | C. OLSON |
| DRAWN | E. SESPENE |
| DATE | JUNE 30, 2015 |
| PROJECT NUMBER | 215786 |

REGISTERED PROFESSIONAL ENGINEER
THEODORE H. KONTONICKAS
NO. 29378
EXP. 06/30/17
MECHANICAL
STATE OF CALIFORNIA
06-30-15

CITY OF PINOLE CALIFORNIA 1903

PINOLE/HERCULES
WATER POLLUTION
CONTROL PLANT UPGRADE
CLIENT PN

**PROCESS**

**DIGESTER GAS BURNER PLAN AND SECTIONS**

0 1" 2"

| | |
|---|---|
| FILENAME | 215786–85P101 |
| SCALE | AS NOTED |

SHEET **85P101**

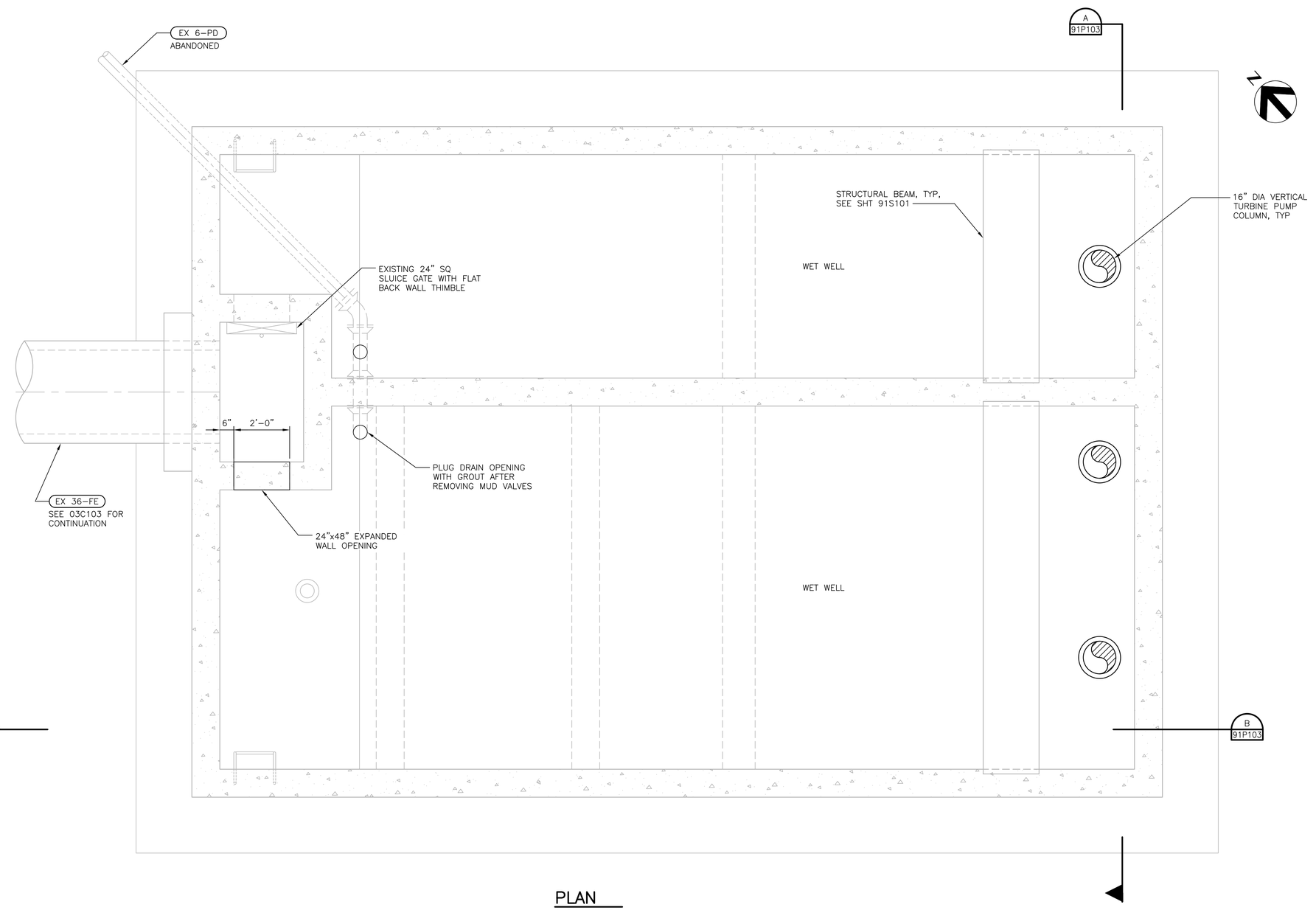


PLAN
1/2" = 1'–0"

FILE: 215786–91P101.dwg
DATE: Oct 07, 2015–5:03:23am, rsnider

HDR Engineering, Inc.

| ISSUE | DATE | DESCRIPTION |
|---|---|---|
| A | JUNE 2015 | ISSUED FOR BID |

| | |
|---|---|
| PROJECT MANAGER | C. OLSON |
| | |
| DESIGNED | M. BECK |
| DESIGNED | |
| CHECKED | D. HUNT |
| DRAWN | M. FOYLE |
| DATE | JUNE 30, 2015 |
| | |
| PROJECT NUMBER | 215786 |

REGISTERED PROFESSIONAL ENGINEER
JASON W. BECK
NO. 73193
EXP. 12/31/16
CIVIL
STATE OF CALIFORNIA
06-30-15

CITY OF PINOLE CALIFORNIA 1903

PINOLE/HERCULES
WATER POLLUTION
CONTROL PLANT UPGRADE
CLIENT PN

**PROCESS**

**EXISTING EFFLUENT PUMPING STATION**
**LOWER LEVEL MODIFICATIONS PLAN**

0 1" 2"

| | |
|---|---|
| FILENAME | 215786–91P101 |
| SCALE | AS NOTED |

SHEET
**91P101**

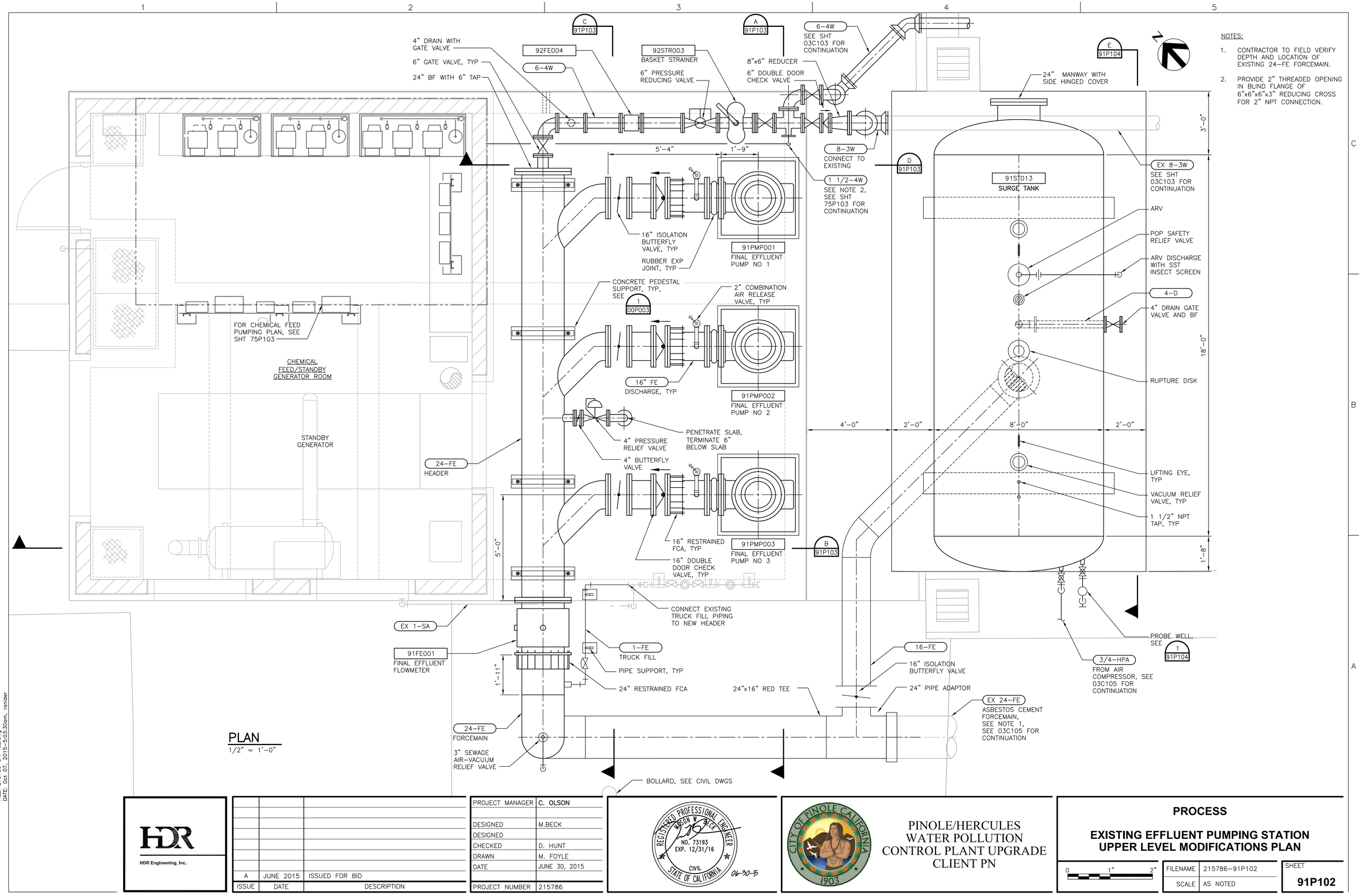


PLAN
1/2" = 1'-0"

NOTES:

1. CONTRACTOR TO FIELD VERIFY DEPTH AND LOCATION OF EXISTING 24-FE FORCEMAIN.
2. PROVIDE 2" THREADED OPENING IN BLIND FLANGE OF 6"x6"x6"x3" REDUCING CROSS FOR 2" NPT CONNECTION.

FILE: 215786-91P102.dwg
DATE: Oct 07, 2015-5:03:30pm, rsnider

HDR Engineering, Inc.

| ISSUE | DATE | DESCRIPTION |
|---|---|---|
| A | JUNE 2015 | ISSUED FOR BID |

| | |
|---|---|
| PROJECT MANAGER | C. OLSON |
| DESIGNED | M.BECK |
| DESIGNED | |
| CHECKED | D. HUNT |
| DRAWN | M. FOYLE |
| DATE | JUNE 30, 2015 |
| PROJECT NUMBER | 215786 |

REGISTERED PROFESSIONAL ENGINEER
DYSON W. BECK
NO. 73193
EXP. 12/31/16
CIVIL
STATE OF CALIFORNIA
06-30-15

CITY OF PINOLE CALIFORNIA 1903

PINOLE/HERCULES
WATER POLLUTION
CONTROL PLANT UPGRADE
CLIENT PN

**PROCESS**

**EXISTING EFFLUENT PUMPING STATION UPPER LEVEL MODIFICATIONS PLAN**

0 1" 2"

| | |
|---|---|
| FILENAME | 215786-91P102 |
| SCALE | AS NOTED |

SHEET **91P102**

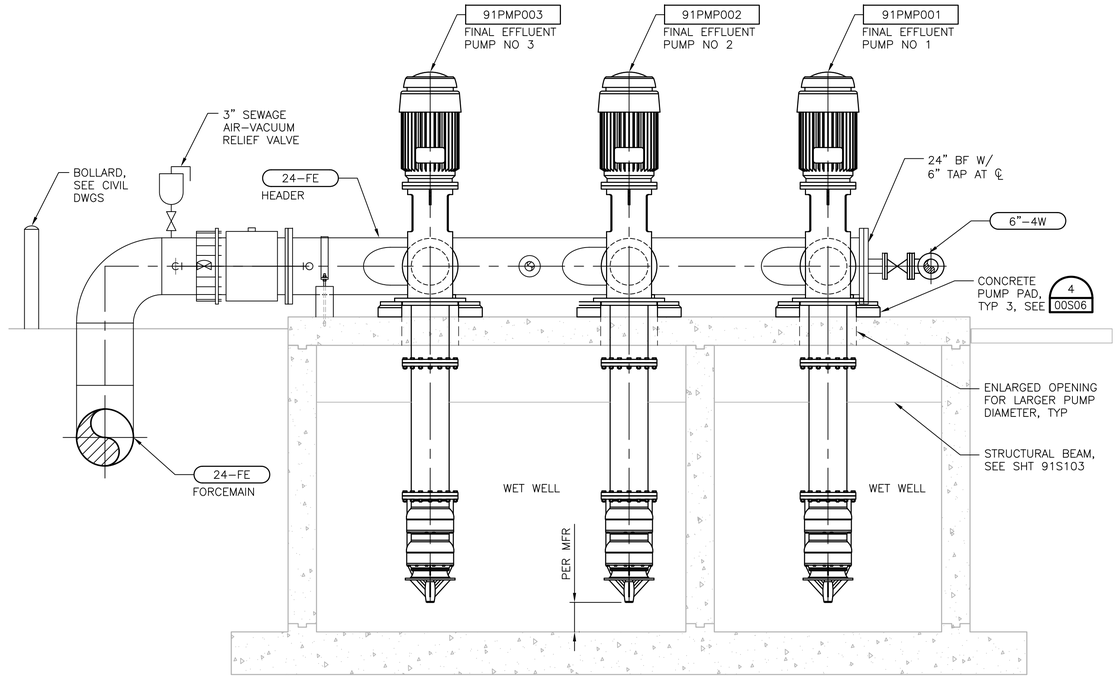


## SECTION
3/8" = 1'-0"
A 91P101

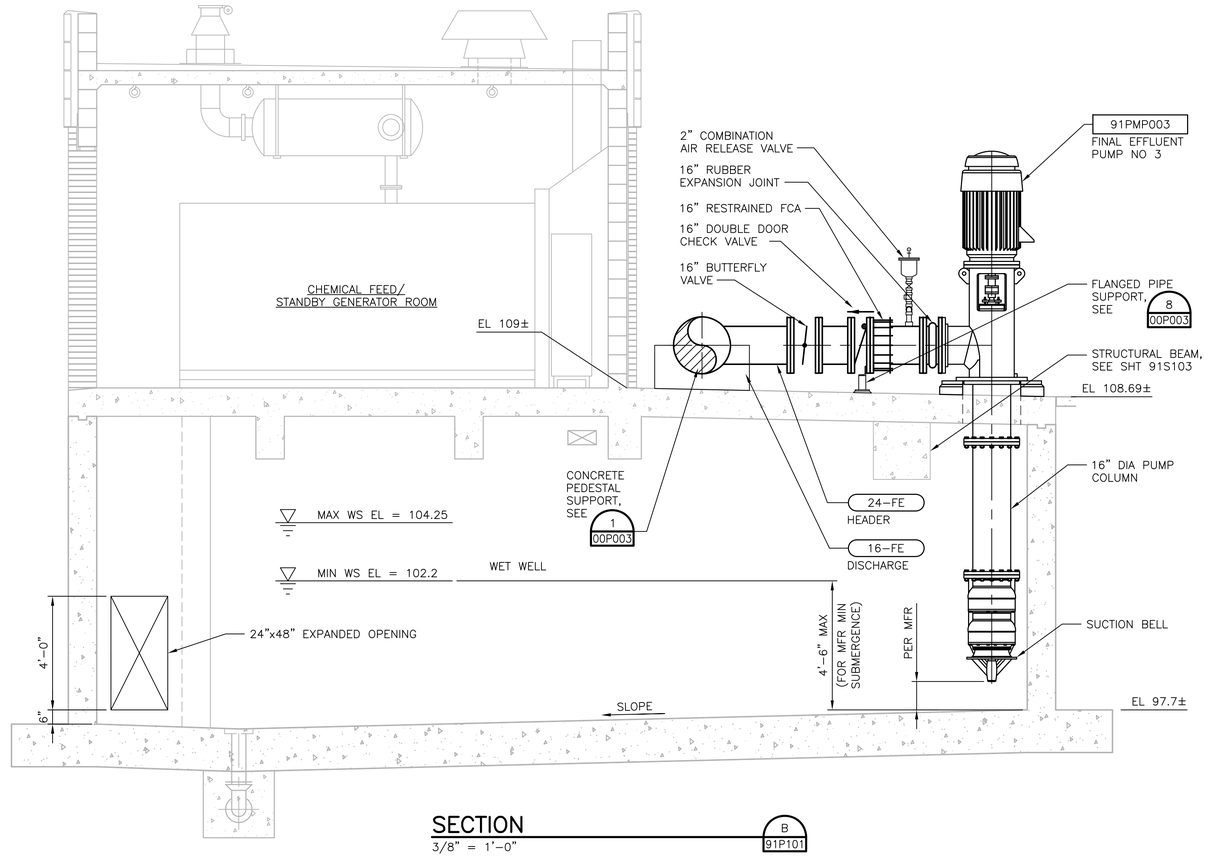


## SECTION
3/8" = 1'-0"
B 91P101

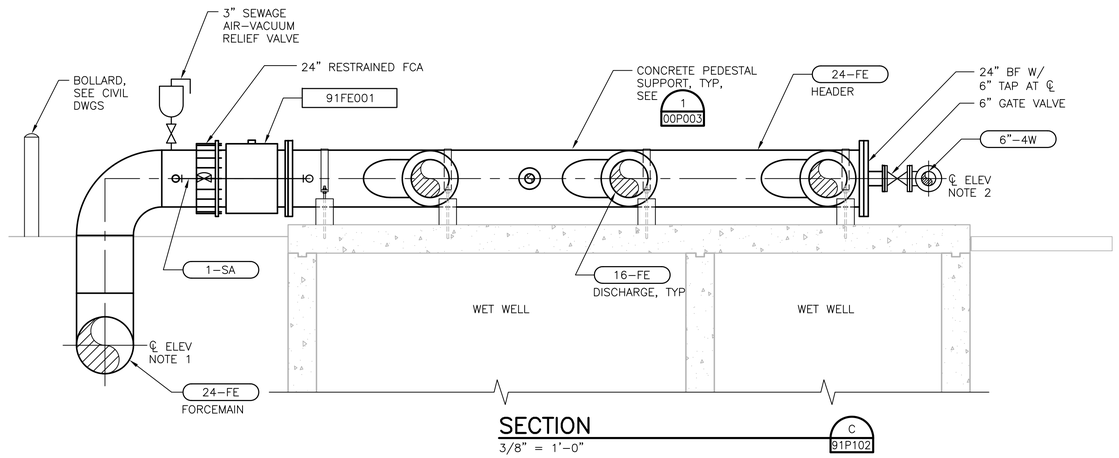


## SECTION
3/8" = 1'-0"
C 91P102

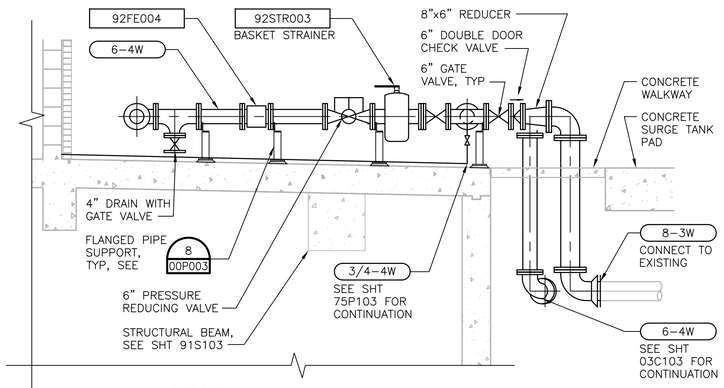


## SECTION
3/8" = 1'-0"
D 91P102

NOTES:

1. CONTRACTOR SHALL POTHOLE TO FIELD VERIFY DEPTH AND DEPTH OF EXISTING 24-FE FORCEMAIN.
2. FIELD VERIFY CENTERLINE ELEVATION

FILE: 215786-91P103.dwg
DATE: Oct 07, 2015-5:03:36pm, rsnider

HDR Engineering, Inc.

| ISSUE | DATE | DESCRIPTION |
|---|---|---|
| A | JUNE 2015 | ISSUED FOR BID |

| | |
|---|---|
| PROJECT MANAGER | C. OLSON |
| DESIGNED | M. BECK |
| DESIGNED | |
| CHECKED | D. HUNT |
| DRAWN | M. FOYLE |
| DATE | JUNE 30, 2015 |
| PROJECT NUMBER | 215786 |

REGISTERED PROFESSIONAL ENGINEER DUNCAN W. BECK NO. 73193 EXP. 12/31/16 CIVIL STATE OF CALIFORNIA 06-30-15

CITY OF PINOLE CALIFORNIA 1903

PINOLE/HERCULES WATER POLLUTION CONTROL PLANT UPGRADE CLIENT PN

**PROCESS**

**EXISTING EFFLUENT PUMPING STATION SECTIONS**

0 1" 2"

| | |
|---|---|
| FILENAME | 215786-91P103 |
| SCALE | AS NOTED |

SHEET **91P103**

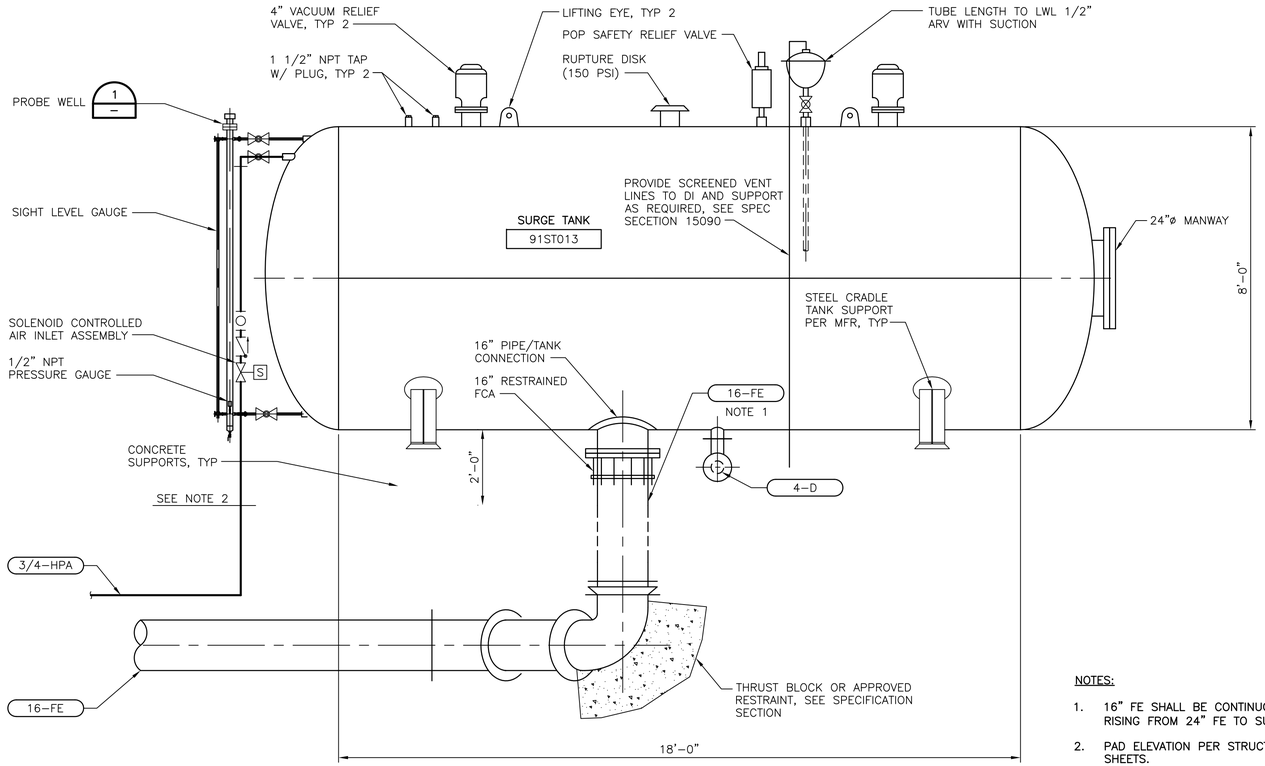


SECTION
1/2" = 1'-0"
E
91P102

NOTES:

1. 16" FE SHALL BE CONTINUOUSLY RISING FROM 24" FE TO SURGE TANK.
2. PAD ELEVATION PER STRUCTURAL SHEETS.

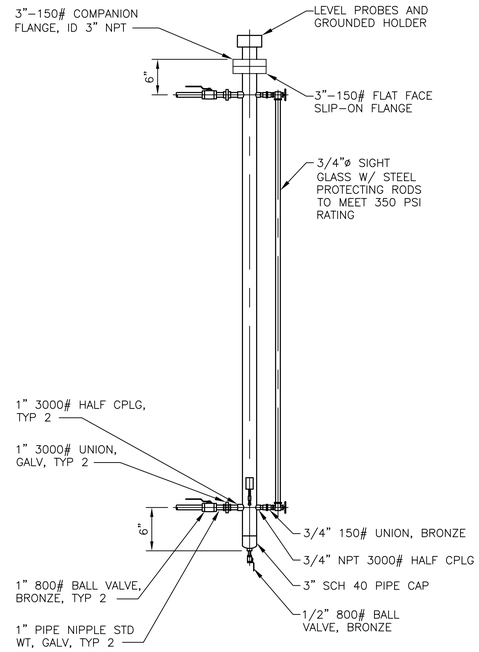


PROBE WELL DETAIL
3/4" = 1'-0"
1

FILE: 215786-91P104.dwg
DATE: Oct 07, 2015-5:03:42pm, rsnider

HDR Engineering, Inc.

| ISSUE | DATE | DESCRIPTION |
|---|---|---|
| A | JUNE 2015 | ISSUED FOR BID |

| | |
|---|---|
| PROJECT MANAGER | C. OLSON |
| DESIGNED | M. BECK |
| DESIGNED | |
| CHECKED | C. OLSON |
| DRAWN | M. FOYLE |
| DATE | JUNE 30, 2015 |
| PROJECT NUMBER | 215786 |

REGISTERED PROFESSIONAL ENGINEER
JASON W. BECK
NO. 73193
EXP. 12/31/16
CIVIL
STATE OF CALIFORNIA
06-30-15

CITY OF PINOLE CALIFORNIA 1903

PINOLE/HERCULES
WATER POLLUTION
CONTROL PLANT UPGRADE
CLIENT PN

**PROCESS**

**SURGE TANK SECTIONS AND DETAILS**

0 1" 2"

| | |
|---|---|
| FILENAME | 215786-91P104 |
| SCALE | AS NOTED |

SHEET
**91P104**

## PACKAGED DX COOLING ONLY AC UNIT SCHEDULE

| SYMBOL | MANUFACTURER & MODEL # | SUPPLY CFM | EXTERNAL STATIC PRESSURE IN WC | VOLTAGE | EER | TOTAL/SENSIBLE CAPACITY (MBTUH) @ 67°F EA WB & 85°F EA DB | AMBIENT TEMP (°F) | BHP | COMPRESSOR CIR1 RLA /CIR 2 RLA | OFM (EA) WATTS/FLA | IFM FLA | MCA | WEIGHT (LBS.) | REMARKS |
|---|---|---|---|---|---|---|---|---|---|---|---|---|---|---|
| 14ACU101 | CARRIER 50HC-D09C1 OR EQUAL | 2,975 | 1.0 | 460/3 | 12.2 | 106.9/93.4 | 85 | 1.22 | 6.2/6.2 | 325/0.8 | 3.8 | 22 | 900 | PROVIDE ANTI-CORROSION COATING ON OUTDOOR COILS, UNIT CASING, AND ALL INTERNALS. PROVIDE UNIT WITH 2 STAGE COOLING WITH 2 SPEED INDOOR FAN MOTOR, DRY BULB ECONOMIZER WITH POWER EXHAUST WITH BAROMETRIC RELIEF, ECONOMIZER HOOD, SUPPLY AIR SMOKE DETECTOR, DISCONNECT, MOTORIZED 2 POSITION DAMPER, WINTER START KIT, SINGLE POINT ELECTRICAL CONNECTION, STANDARD 30% FILTER. |

## SUPPLY FAN SCHEDULE

| SYMBOL | MANUFACTURER & MODEL # | CFM | EXTERNAL STATIC PRESSURE IN. W.C. | VOLTAGE | HP | FAN RPM | SONES | WEIGHT (LBS.) | REMARKS |
|---|---|---|---|---|---|---|---|---|---|
| 61F101 | LOREN COOK 30 SEP OR EQUAL | 2,000 | 0.25 | 120/1/60 | 1/3 | 570 | 7.2 | 220 | DISCONNECT SWITCH |

## WALL LOUVER SCHEDULE

| SYMBOL | MANUFACTURER & MODEL # | CFM | DIMENSION (W) x (H) | MAX PRESSURE DROP IN WC | MINIMUM FREE AREA | MAXIMUM VELOCITY (FPM) | REMARKS |
|---|---|---|---|---|---|---|---|
| WL-1 | RUSKIN ELF375DX OR EQUAL | 2,400 | 72x28 | 0.06 | 5.43 | 500 | 54% FREE AREA. PROVIDE LOUVER WITH BIRD SCREEN AND MOTORIZED DAMPER. COORDINATE COLOR WITH ARCHITECTURAL. |

## SUPPLY/RETURN GRILLE SCHEDULE

| SYMBOL | MANUFACTURER & MODEL # | CFM | MAXIMUM STATIC PRESSURE DROP IN WC | REMARKS |
|---|---|---|---|---|
| SR-1 | TITUS 300RL OR EQUAL | 2,975 | 0.15 | SUPPLY WALL GRILLE/REGISTER, 3/4" BLADE SPACING, STEEL, DOUBLE DEFLECTION, 45° THROW. |
| RR-1 | TITUS 350ZRL OR EQUAL | 2,975 | 0.1 | RETURN WALL GRILLE/REGISTER, 3/4" BLADE SPACING, STEEL, DOUBLE DEFLECTION, 0° DEFLECTION. |

## ELECTRIC UNIT HEATER SCHEDULE

| SYMBOL | MANUFACTURER & MODEL # | CFM | BTUH | KW | VOLTAGE | AMPS | TEMP RISE (°F) | AIR THROW (FEET) | MOUNTING HEIGHT (FEET) | WEIGHT (LBS) | REMARKS |
|---|---|---|---|---|---|---|---|---|---|---|---|
| 61UH101 | MARKEL 5100 SERIES P3P5110CA1N OR EQUAL | 700 | 34,100 | 10 | 480/3 | 12.1 | 45 | 22 | 10 | 60 | HORIZONTAL MOUNTED FAN FORCED UNIT HEATER. PROVIDE HEATER WITH IN UNIT TEMPERATURE CONTROL THERMOSTAT, DISCONNECT SWITCH, AND WALL MOUNTING BRACKET. |
| 61UH102 | MARKEL 5100 SERIES P3P5110CA1N OR EQUAL | 700 | 34,100 | 10 | 480/3 | 12.1 | 45 | 22 | 10 | 60 | HORIZONTAL MOUNTED FAN FORCED UNIT HEATER. PROVIDE HEATER WITH IN UNIT TEMPERATURE CONTROL THERMOSTAT, DISCONNECT SWITCH, AND WALL MOUNTING BRACKET. |
| 61UH103 | MARKEL 5100 SERIES P3P5110CA1N OR EQUAL | 700 | 34,100 | 10 | 480/3 | 12.1 | 45 | 22 | 10 | 60 | HORIZONTAL MOUNTED FAN FORCED UNIT HEATER. PROVIDE HEATER WITH IN UNIT TEMPERATURE CONTROL THERMOSTAT, DISCONNECT SWITCH, AND WALL MOUNTING BRACKET. |

SEQUENCE OF OPERATION:

ELECTRICAL BUILDING

PACKAGED AC UNIT (14ACU101):

UNIT SHALL MAINTAIN 85°F (ADJUSTABLE) IN THE ROOM. OCCUPANT SHALL BE ABLE TO ADJUST ZONE TEMPERATURE COOLING SETPOINTS AT ZONE THERMOSTAT. THERMOSTAT SHALL MEASURE ZONE TEMPERATURE AND ENABLE COOLING TO MAINTAIN ITS COOLING SETPOINT.

ECONOMIZER SHALL ENABLE WHENEVER OUTSIDE AIR IS LESS THAN 60°F (ADJUSTALBE). ECONOMIZER SHALL CLOSE WHENEVER THE OUTSIDE AIR TEMPERATURE IS HIGHER THAN 65°F (ADJUSTABLE).

OUTSIDE AIR DAMPER SHALL MAINTAIN A MINIMUM POSITION (ADJUSTABLE) WHEN ECONOMIZER IS DISABLED.

SOLIDS HANDLING BUILDING LOWER FLOOR

UNIT HEATER (61UH101, 61UH102, 61UH103):

UNIT HEATER SHALL MAINTAIN A HEATING SETPOINT OF 50°F (ADJUSTABLE) IN THE ROOM. UNIT SHALL RUN ANYTIME ZONE TEMPERATURE DROPS BELOW HEATING SETPOINT, UNLESS SHUT DOWN ON SAFETIES. THERMOSTAT SHALL MEASURE ZONE TEMPERATURE AND ENABLE HEATING TO MAINTAIN ITS HEATING SETPOINT.

SUPPLY FAN (61F101):

SUPPLY FAN SHALL RUN CONTINUOUSLY.

FILE: 00M001.dwg
DATE: Oct. 06, 2015 - 7:22:10pm, rsnider

HDR Engineering, Inc.

| ISSUE | DATE | DESCRIPTION |
|---|---|---|
| A | JUNE 2015 | ISSUED FOR BID |

| | |
|---|---|
| PROJECT MANAGER | C. OLSON |
| DESIGNED | K. CHEUNG |
| DESIGNED | T. KONTONICKAS |
| CHECKED | C. OLSON |
| DRAWN | K. CHEUNG |
| DATE | JUNE 30, 2015 |
| PROJECT NUMBER | 215786 |

REGISTERED PROFESSIONAL ENGINEER
THEODORE H. KONTONICKAS
NO. 29378
EXP. 06/30/17
MECHANICAL
STATE OF CALIFORNIA
06-30-15

CITY OF PINOLE CALIFORNIA 1903

PINOLE/HERCULES
WATER POLLUTION
CONTROL PLANT UPGRADE
CLIENT PN

**MECHANICAL**

**SCHEDULES AND SEQUENCE OF OPERATIONS**

0 1" 2"

| FILENAME | 00M001 |
|---|---|
| SCALE | AS NOTED |

SHEET **00M001**

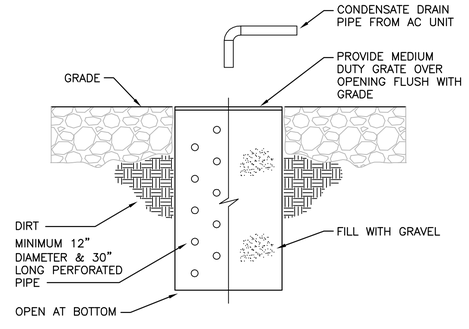


1 DRYWELL / FRENCH DRAIN DETAIL

SCALE: NONE

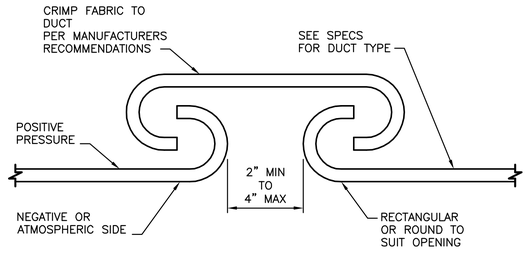


NOTES:

1. FABRICATE AND INSTALL PER SMACNA.
2. REFER TO SMACNA AND SPECIFICATIONS FOR ADDITIONAL REQUIREMENTS.

2 FLEXIBLE DUCT CONNECTION DETAIL

SCALE: NONE

FILE: 00M002.dwg
DATE: Oct. 06, 2015 - 7:22:15pm, rsnider

HDR Engineering, Inc.

| ISSUE | DATE | DESCRIPTION |
|---|---|---|
| A | JUNE 2015 | ISSUED FOR BID |

| | |
|---|---|
| PROJECT MANAGER | C. OLSON |
| DESIGNED | K. CHEUNG |
| DESIGNED | T. KONTONICKAS |
| CHECKED | C. OLSON |
| DRAWN | K. CHEUNG |
| DATE | JUNE 30, 2015 |
| PROJECT NUMBER | 215786 |

REGISTERED PROFESSIONAL ENGINEER
THEODORE H. KONTONICKAS
NO. 29378
EXP. 06/30/17
MECHANICAL
STATE OF CALIFORNIA
06-30-15

CITY OF PINOLE CALIFORNIA 1903

PINOLE/HERCULES
WATER POLLUTION
CONTROL PLANT UPGRADE
CLIENT PN

**MECHANICAL**

**DETAILS 1**
**TITLE LINE 4**

0 1" 2"

| | |
|---|---|
| FILENAME | 00M002 |
| SCALE | AS NOTED |

SHEET **00M002**

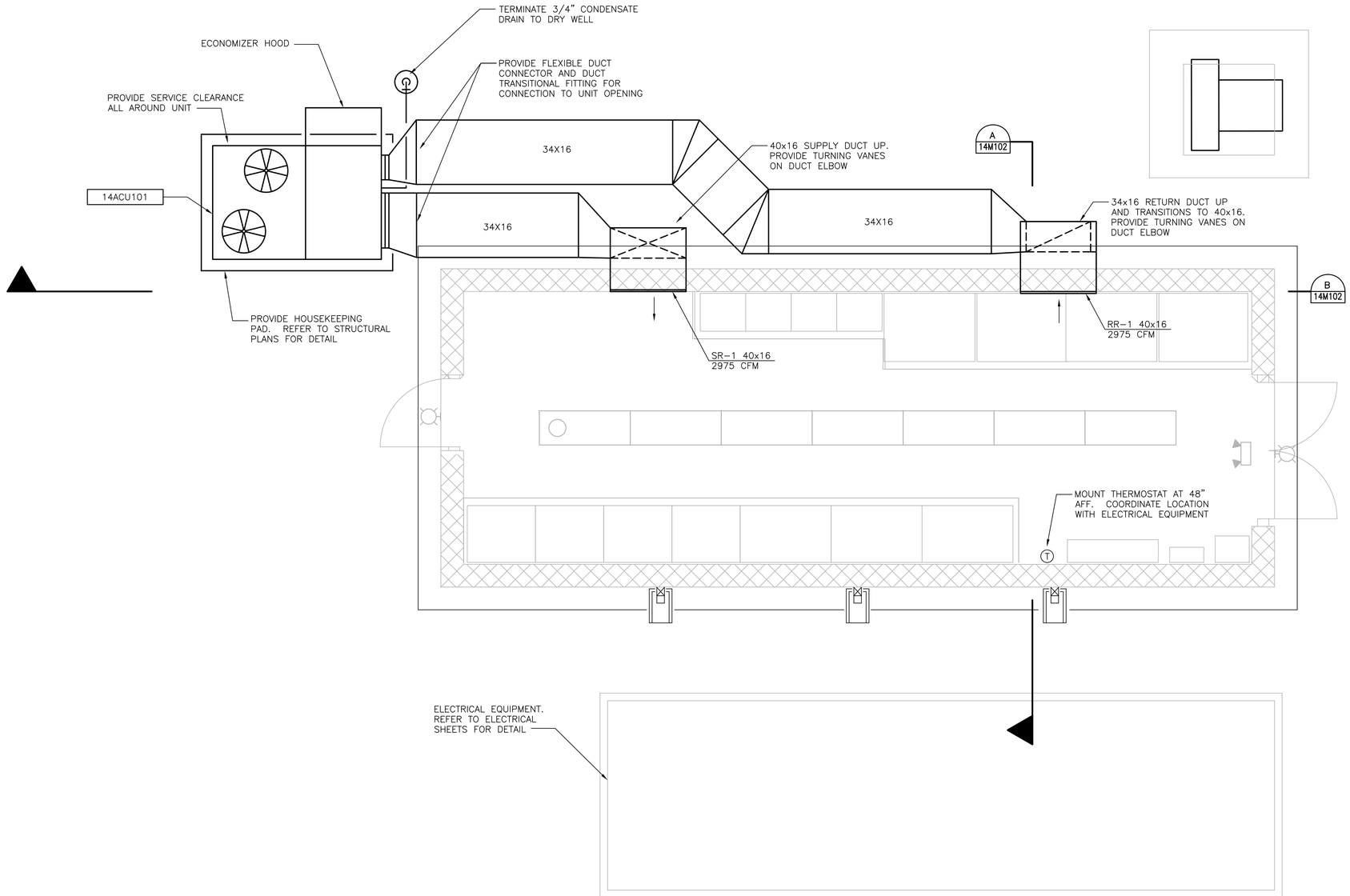


## FLOOR PLAN

SCALE: 3/8" = 1'-0"

1

FILE: 215786-14M101.dwg
DATE: Oct. 07, 2015-4:36:30pm, rsnider

HDR Engineering, Inc.

| ISSUE | DATE | DESCRIPTION |
|---|---|---|
| A | JUNE 2015 | ISSUED FOR BID |

| | |
|---|---|
| PROJECT MANAGER | C. OLSON |
| | |
| DESIGNED | K. CHEUNG |
| DESIGNED | T. KONTONICKAS |
| CHECKED | C. OLSON |
| DRAWN | K. CHEUNG |
| DATE | JUNE 30, 2015 |
| | |
| PROJECT NUMBER | 215786 |

REGISTERED PROFESSIONAL ENGINEER
THEODORE H. KONTONICKAS
NO. 29378
EXP. 06/30/17
MECHANICAL
STATE OF CALIFORNIA
06-30-15

CITY OF PINOLE CALIFORNIA 1903

PINOLE/HERCULES WATER POLLUTION CONTROL PLANT UPGRADE
CLIENT PN

**MECHANICAL**

**ELECTRICAL BUILDING FLOOR PLAN**

0 1" 2"

| | |
|---|---|
| FILENAME | 215786-14M101 |
| SCALE | NTS |

SHEET **14M101**

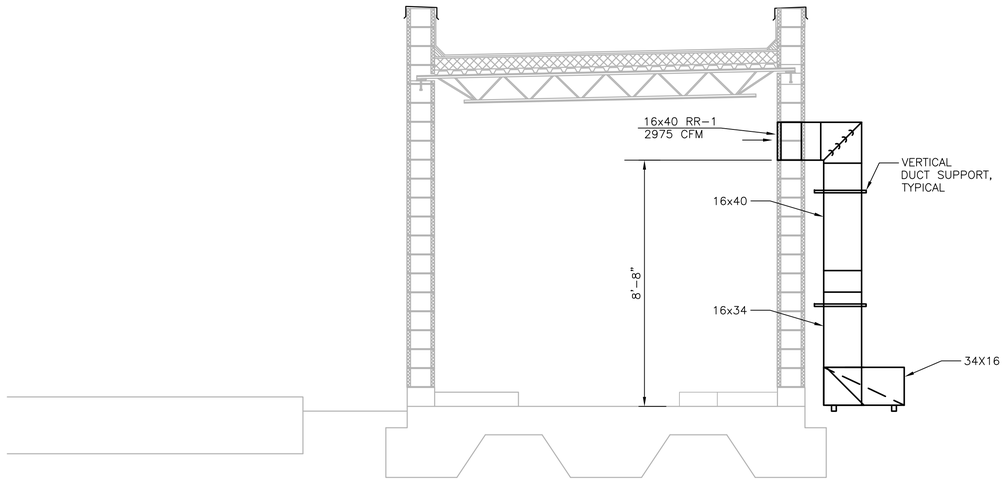


SECTION
SCALE: 3/8" = 1'-0"

A
14M101

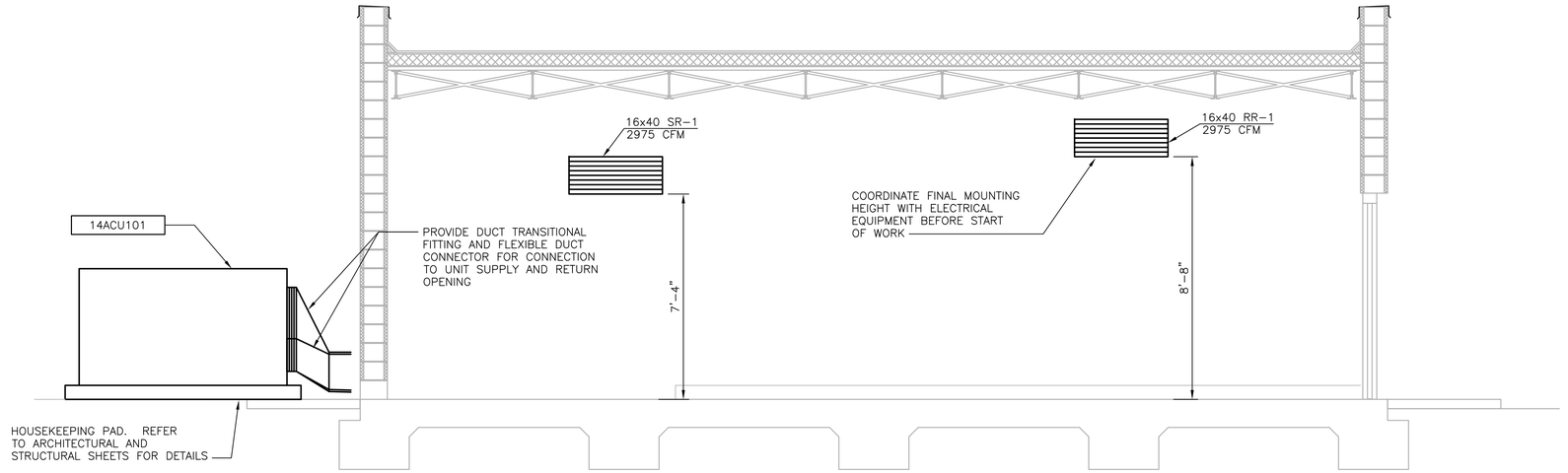


SECTION
SCALE: 3/8" = 1'-0"

B
14M101

FILE: 215786-14M102.dwg
DATE: Oct 07, 2015-4:36:36pm rsnider

HDR
HDR Engineering, Inc.

| ISSUE | DATE | DESCRIPTION |
|---|---|---|
| A | JUNE-2015 | ISSUED FOR BID |

| | |
|---|---|
| PROJECT MANAGER | C. OLSON |
| | |
| DESIGNED | K. CHEUNG |
| DESIGNED | T. KONTONICKAS |
| CHECKED | C. OLSON |
| DRAWN | K. CHEUNG |
| DATE | JUNE 30, 2015 |
| | |
| PROJECT NUMBER | 215786 |

REGISTERED PROFESSIONAL ENGINEER
THEODORE H. KONTONICKAS
NO. 29378
EXP. 06/30/17
MECHANICAL
STATE OF CALIFORNIA
06-30-15

CITY OF PINOLE CALIFORNIA 1903

PINOLE/HERCULES
WATER POLLUTION
CONTROL PLANT UPGRADE
CLIENT PN

**MECHANICAL**
**TITLE LINE 2**
**ELECTRICAL BUILDING SECTIONS**
**TITLE LINE 4**

0 1" 2"

| | |
|---|---|
| FILENAME | 215786-14M102 |
| SCALE | AS NOTED |

SHEET
**14M102**

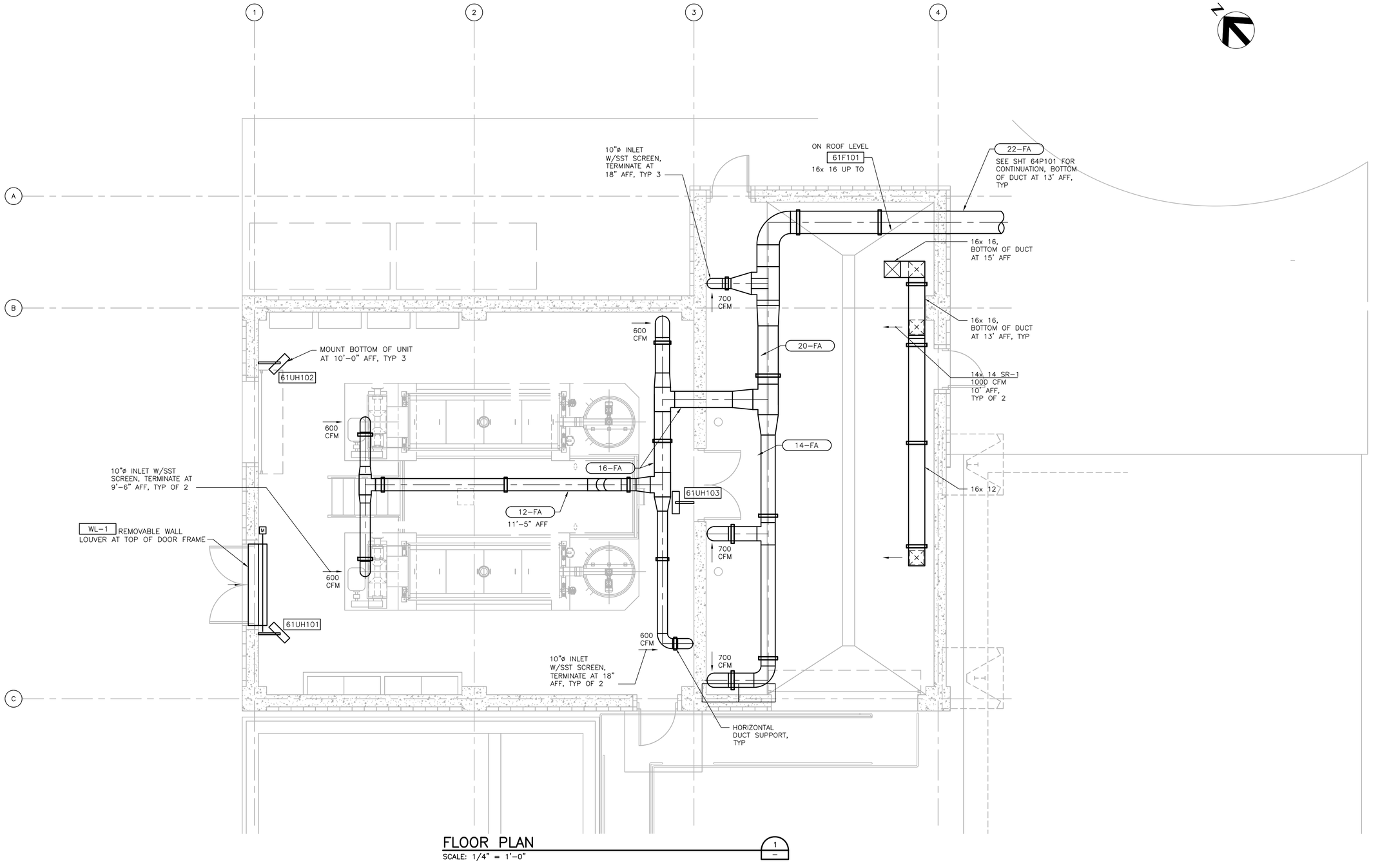


## FLOOR PLAN

SCALE: 1/4" = 1'–0"

1

FILE: 215786–61M101.dwg
DATE: Oct 07, 2015–4:53:03am, rsnider

HDR Engineering, Inc.

| ISSUE | DATE | DESCRIPTION |
|---|---|---|
| A | JUNE 2015 | ISSUED FOR BID |

| | |
|---|---|
| PROJECT MANAGER | C. OLSON |
| DESIGNED | K. CHEUNG |
| DESIGNED | T. KONTONICKAS |
| CHECKED | C. OLSON |
| DRAWN | R. SNIDER |
| DATE | JUNE 30, 2015 |
| PROJECT NUMBER | 215786 |

REGISTERED PROFESSIONAL ENGINEER
THEODORE H. KONTONICKAS
NO. 29378
EXP. 06/30/17
MECHANICAL
STATE OF CALIFORNIA
06-30-15

CITY OF PINOLE CALIFORNIA 1903

PINOLE/HERCULES
WATER POLLUTION
CONTROL PLANT UPGRADE
CLIENT PN

**MECHANICAL**

**SOLIDS HANDLING BUILDING**
**LOWER FLOOR PLAN**

0 1" 2"

| | |
|---|---|
| FILENAME | 215786–61M101 |
| SCALE | AS NOTED |

SHEET
**61M101**

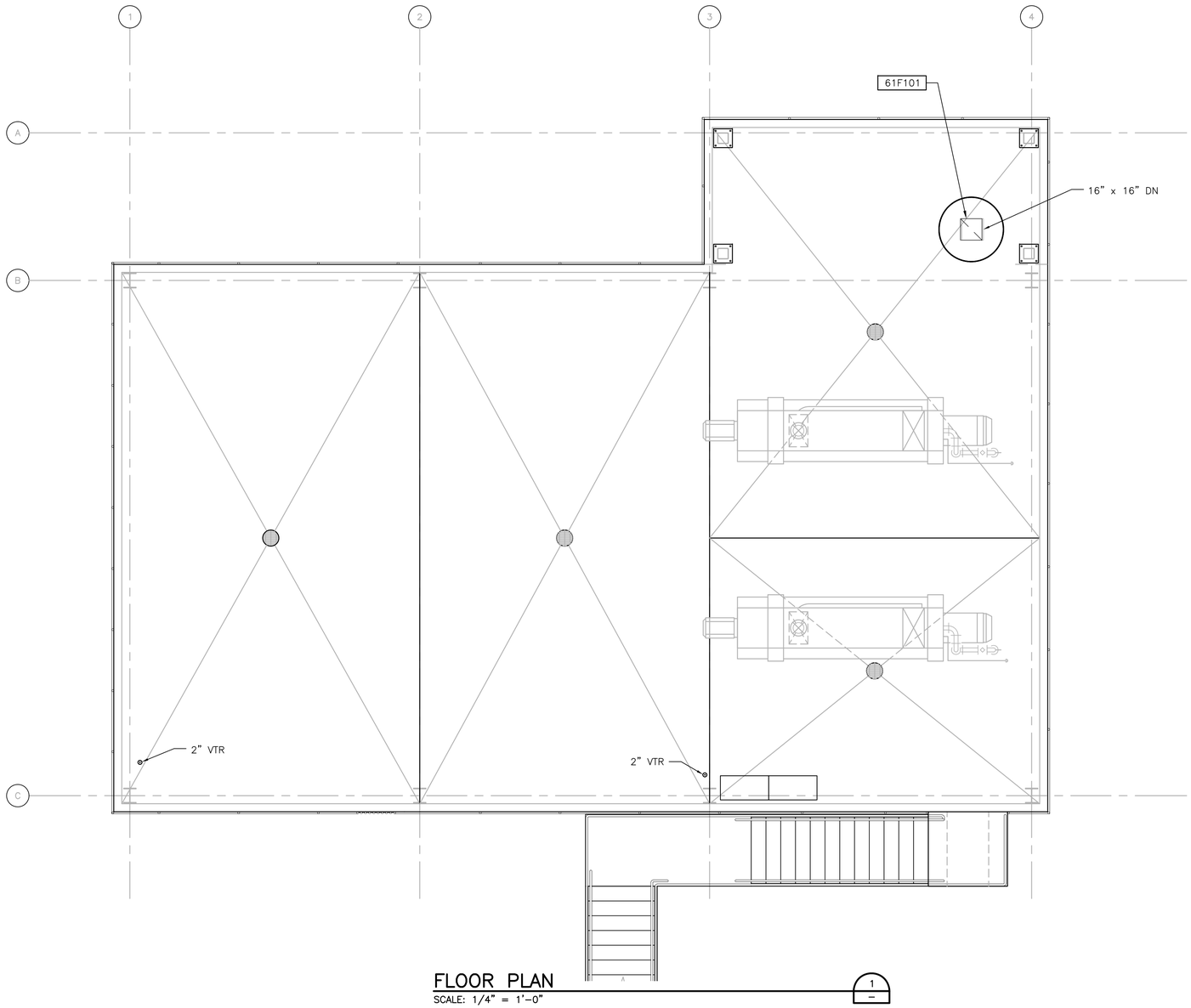


FLOOR PLAN
SCALE: 1/4" = 1'-0"

1
–

FILE: 215786-61M102.dwg
DATE: Oct 07, 2015-4:53:12am, ranider

HDR Engineering, Inc.

| ISSUE | DATE | DESCRIPTION |
|---|---|---|
| A | JUNE 2015 | ISSUED FOR BID |

| | |
|---|---|
| PROJECT MANAGER | C. OLSON |
| DESIGNED | K. CHEUNG |
| DESIGNED | T. KONTONICKAS |
| CHECKED | C. OLSON |
| DRAWN | R. SNIDER |
| DATE | JUNE 30, 2015 |
| PROJECT NUMBER | 215786 |

REGISTERED PROFESSIONAL ENGINEER
THEODORE H. KONTONICKAS
NO. 29378
EXP. 06/30/17
MECHANICAL
STATE OF CALIFORNIA
06-30-15

CITY OF PINOLE CALIFORNIA 1903

PINOLE/HERCULES
WATER POLLUTION
CONTROL PLANT UPGRADE
CLIENT PN

**MECHANICAL**

**SOLIDS HANDLING BUILDING**
**UPPER FLOOR PLAN**

0 1" 2"

| | |
|---|---|
| FILENAME | 215786-61M102 |
| SCALE | AS NOTED |

SHEET
**61M102**

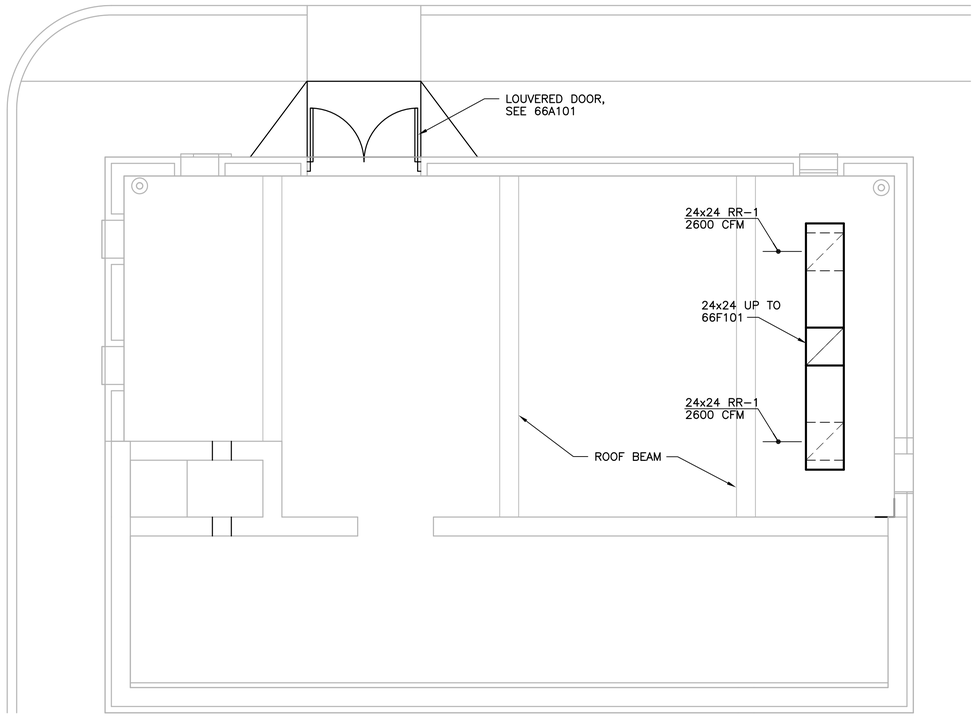


FLOOR PLAN
1/4" = 1'-0"

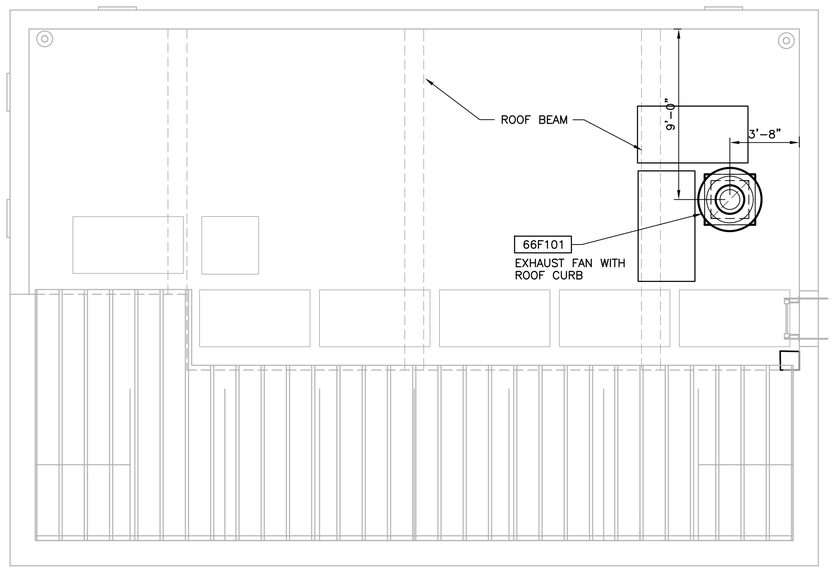


ROOF PLAN
1/4" = 1'-0"

FILE: 215786-66M101.dwg
DATE: Oct 07, 2015-6:16:34am, rsnider

HDR Engineering, Inc.

| ISSUE | DATE | DESCRIPTION |
|---|---|---|
| | | |
| | | |
| | | |
| | | |
| | | |
| | | |
| A | JUNE 2015 | ISSUED FOR BID |

| | |
|---|---|
| PROJECT MANAGER | C. OLSON |
| | |
| DESIGNED | T. KONTONICKAS |
| DESIGNED | |
| CHECKED | C. OLSON |
| DRAWN | R. SNIDER |
| DATE | JUNE 30, 2015 |
| | |
| PROJECT NUMBER | 215786 |

REGISTERED PROFESSIONAL ENGINEER
THEODORE H. KONTONICKAS
NO. 29378
EXP. 06/30/17
MECHANICAL
STATE OF CALIFORNIA
06-30-15

CITY OF PINOLE CALIFORNIA 1903

PINOLE/HERCULES
WATER POLLUTION
CONTROL PLANT UPGRADE
CLIENT PN

**MECHANICAL**

**MAINTENANCE SHOP FLOOR AND ROOF PLAN**

0 1" 2"

| | |
|---|---|
| FILENAME | 215786-66M101 |
| SCALE | AS NOTED |

SHEET
**66M101**

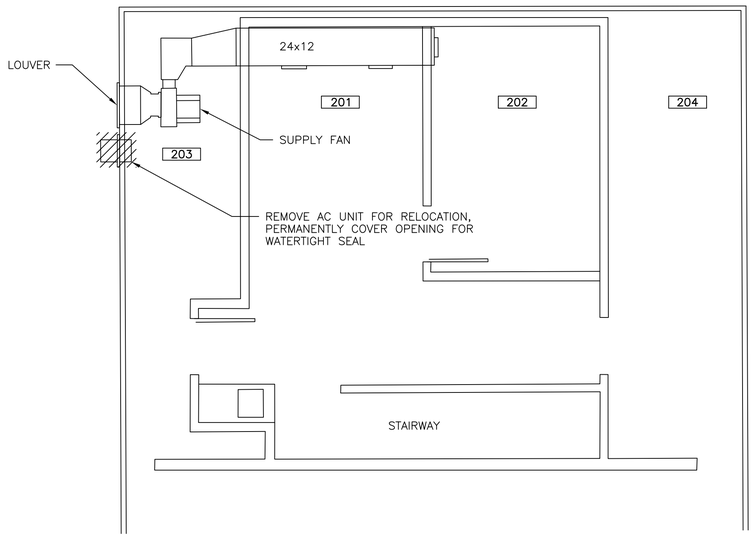


LOFT DEMOLITION PLAN
1/4" = 1'-0"

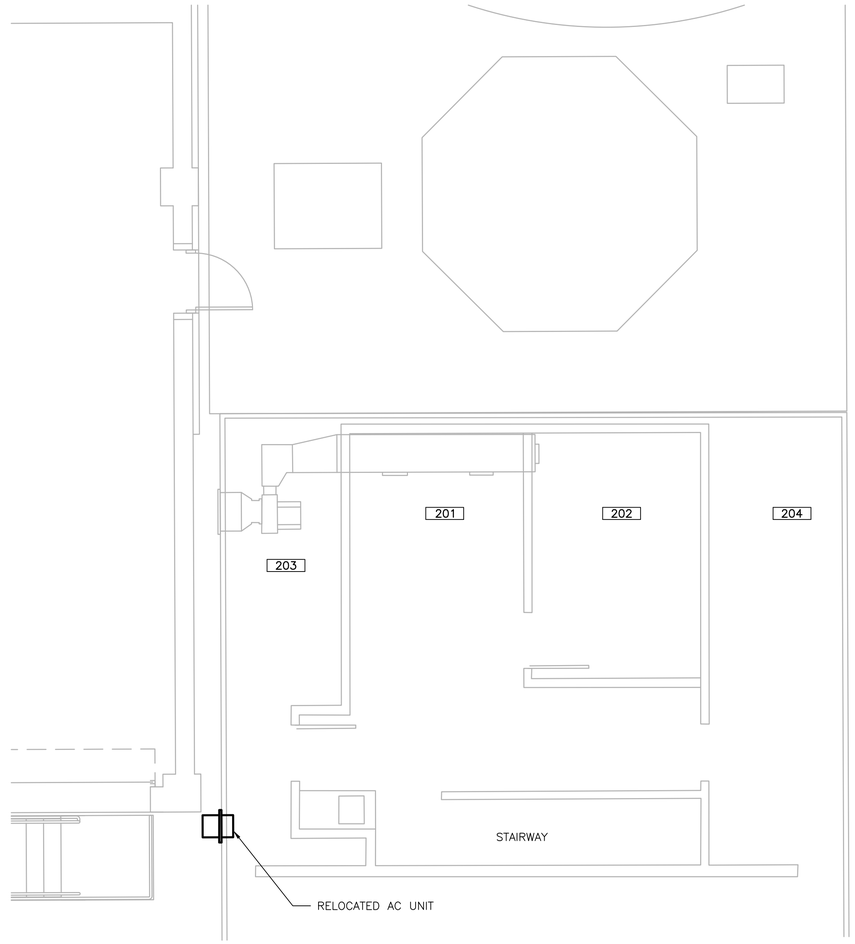


LOFT PLAN
1/4" = 1'-0"

FILE: 215786-67M101.dwg
DATE: Oct 07, 2015-4:55:03pm, rsnider

HDR Engineering, Inc.

| ISSUE | DATE | DESCRIPTION |
|---|---|---|
| | | |
| | | |
| | | |
| | | |
| | | |
| | | |
| | | |
| A | JUNE 2015 | ISSUED FOR BID |

| | |
|---|---|
| PROJECT MANAGER | C. OLSON |
| | |
| DESIGNED | T. KONTONICKAS |
| DESIGNED | |
| CHECKED | |
| DRAWN | R. SNIDER |
| DATE | JUNE 30, 2015 |
| | |
| PROJECT NUMBER | 215786 |

REGISTERED PROFESSIONAL ENGINEER
THEODORE H. KONTONICKAS
NO. 29378
EXP. 06/30/17
MECHANICAL
STATE OF CALIFORNIA
06-30-15

CITY OF PINOLE CALIFORNIA 1903

PINOLE/HERCULES
WATER POLLUTION
CONTROL PLANT UPGRADE
CLIENT PN

**MECHANICAL**

**CORPORATION YARD BUILDING HVAC MODIFICATIONS**

0 1" 2"

| | |
|---|---|
| FILENAME | 215786-67M101 |
| SCALE | AS NOTED |

SHEET
**67M101**

| | | | | |
|---|---|---|---|---|
| X 20A OR 3P / 100AF 80AT 3P | LOW – VOLTAGE CIRCUIT BREAKER (CB). RATINGS AND NO. OF POLES AS SHOWN. WHEN SPECIFIC TYPE IS REQUIRED, X INDICATES TYPE.<br>TYPES:<br>MCCB – MOLDED CASE<br>ICCB – INSULATED CASE<br>LVP – LOW – VOLTAGE POWER<br>MCP – MOTOR CIRCUIT PROTECTOR (RATING PER CONNECTED LOAD) | 100 KVA | NON–MOTOR LOAD WITH DESIGN KVA, KW, OR AMP | NORMALLY OPEN LIMIT SWITCH, CLOSE ON REACHING LIMIT |
| CB | SEPARATELY MOUNTED CIRCUIT BREAKER; SEE ELECTRICAL ONE – LINE DIAGRAM OR SCHEDULE FOR DESCRIPTION | CPT | CONTROL POWER TRANSFORMER (CPT) | NORMALLY CLOSED LIMIT SWITCH, OPEN ON REACHING LIMIT |
| GFP | GROUND FAULT PROTECTION | | VOLTAGE TRANSFORMER (VT OR PT) | FIELD WIRING EXTERNAL TO CONTROL PANEL |
| 52 | MEDIUM – VOLTAGE CIRCUIT BREAKER | | CURRENT TRANSFORMER (CT) | X — INTERLOCK; X INDICATES TYPE<br>TYPES:<br>E – ELECTRICAL<br>M – MECHANICAL<br>K – KEY |
| | FUSE, SIZE, AND NUMBER OF FUSES AS NOTED | WH | UTILITY WATT–HOUR METER PER UTILITY REQUIREMENTS | OFF / HAND / AUTO; XOO; OOX — 3 POSITION SELECTOR SWITCH, MAINTAINED CONTACTS; UNLESS OTHERWISE NOTED, 2–POSITION SIMILAR |
| | FUSED CUTOUT, CURRENT RATING, FUSE SIZE, AND NUMBER OF POLES AS NOTED | DMP | DIGITAL METERING PACKAGE | NORMALLY OPEN PUSHBUTTON, MOMENTARY CONTACT UNLESS OTHERWISE NOTED |
| | FUSIBLE SWITCH, CURRENT RATING, FUSE SIZE, AND QUANTITY AS NOTED | RTM | RUN TIME METER | NORMALLY CLOSED PUSHBUTTON, MOMENTARY CONTACT UNLESS OTHERWISE NOTED |
| | NON–FUSED SWITCH, CURRENT RATING, AND NUMBER OF POLES AS NOTED | | GROUND | X — INDICATING LIGHT, X INDICATES LENS COLOR |
| | DISCONNECT OR DRAWOUT CONNECTION | | LIGHTNING ARRESTER | X — PUSH TO TEST INDICATING LIGHT, X INDICATES LENS COLOR |
| A C B & A C B | MAGNETIC MOTOR STARTER AND SEPARATELY MOUNTED COMBINATION MAGNETIC MOTOR STARTER | SPD | LOW VOLTAGE SURGE PROTECTIVE DEVICE | LENS COLORS:<br>R – RED Y – YELLOW<br>G – GREEN W – WHITE<br>B – BLUE A – AMBER |
| D C D & D C D | MOTOR CONTROLLER AND SEPARATELY MOUNTED MOTOR CONTROLLER WITH SHORT CIRCUIT PROTECTION AND DISCONNECT | | ELECTRICAL CONNECTION | T — TRANSFORMER |
| | MOTOR STARTER AND CONTROLLER SUBSCRIPTS:<br>A – MAGNETIC STARTER NEMA SIZE<br>B – STARTER TYPE<br>NONE – FULL VOLTAGE NON–REVERSING (FVNR)<br>FVR – FULL VOLTAGE REVERSING<br>2S – TWO SPEED<br>RVAT – REDUCED VOLTAGE AUTO TRANSFORMER<br>CONT – CONTACTOR ONLY<br>C – CONTROL DIAGRAM OR CONTROLS SCHEDULE NUMBER (IF REQUIRED)<br>D – CONTROLLER TYPE<br>VFD – VARIABLE FREQUENCY DRIVE<br>SS – SOLID STATE | | OR — NO ELECTRICAL CONNECTION — OR | LOS — LOCKOUT STOP |
| | | SV | OR — SOLENOID VALVE | SS — SELECTOR SWITCH |
| | | X Y | CONTROL/RELAY COIL; X INDICATES TYPE, Y INDICATES LOOP NO. WHEN USED<br>TYPES:<br>CR – CONTROL RELAY<br>DP – DEFINITE PURPOSE RELAY<br>LC – LIGHTING CONTACTOR<br>M – MOTOR STARTER<br>PC – PHOTO CELL<br>TC – TIME CLOCK<br>TR – TIMING RELAY | CS — CONTROL STATION |
| | | | NORMALLY OPEN CONTACT (N.O.) | IC — INSTRUMENTATION/CONTROL DEVICE |
| | | | NORMALLY CLOSED CONTACT (N.C.) | CONTROL PANEL INTEGRAL OR PROVIDED WITH ASSOCIATED EQUIPMENT |
| | | | NORMALLY OPEN TIME DELAY RELAY CONTACT WITH TIME DELAY ON CLOSING AFTER COIL IS ENERGIZED | CONTROL PANEL WITH DISCONNECT SWITCH INTEGRAL OR PROVIDED WITH ASSOCIATED EQUIPMENT |
| | | | NORMALLY CLOSED TIME DELAY RELAY CONTACT WITH TIME DELAY ON OPENING AFTER COIL IS ENERGIZED | J — JUNCTION OR PULL BOX |
| | | | NORMALLY OPEN TIME DELAY RELAY CONTACT WITH TIME DELAY ON OPENING AFTER COIL IS DE–ENERGIZED | PANELBOARD (250V TO 600V) |
| | | | NORMALLY CLOSED TIME DELAY RELAY CONTACT WITH TIME DELAY ON CLOSING AFTER COIL IS DE–ENERGIZED | PANELBOARD (LESS THAN 250V) |
| | | | NORMALLY OPEN TEMPERATURE SWITCH; CLOSE ON RISING TEMPERATURE | ELECTRICAL EQUIPMENT ENCLOSURE: SWITCHBOARD, MOTOR CONTROL CENTER, CONTROL PANEL, OR OTHER EQUIPMENT AS INDICATED |
| | | | NORMALLY CLOSED TEMPERATURE SWITCH; OPEN ON RISING TEMPERATURE | PC — PHOTOCELL |
| | | | NORMALLY OPEN FLOW SWITCH; CLOSE ON INCREASING FLOW | X Y — CEILING/PENDANT–MOUNTED LUMINAIRE – HID, COMPACT FLUORESCENT, OR INCANDESCENT |
| | | | NORMALLY CLOSED FLOW SWITCH; OPEN ON INCREASING FLOW | X Y — WALL–MOUNTED LUMINAIRE – HID, COMPACT FLUORESCENT, OR INCANDESCENT |
| | | | NORMALLY OPEN LEVEL SWITCH, CLOSE ON RISING LEVEL | X Y — 2'X4' CEILING/PENDANT–MOUNTED FLUORESCENT FIXTURE |
| | | | NORMALLY CLOSED LEVEL SWITCH, OPEN ON RISING LEVEL | X Y — 1'X4' WALL–MOUNTED FLUORESCENT FIXTURE |
| | | | NORMALLY OPEN PRESSURE SWITCH, CLOSE ON INCREASING PRESSURE | X Y — 2'X4' CEILING/PENDANT–MOUNTED FLUORESCENT FIXTURE |
| | | | NORMALLY CLOSED PRESSURE SWITCH, OPEN ON INCREASING PRESSURE | X Y — 1'X4' CEILING/PENDANT–MOUNTED FLUORESCENT FIXTURE |
| | | | | X Y — 2'X4' CEILING/PENDANT–MOUNTED FLUORESCENT FIXTURE NORMAL/EMERGENCY |
| | | | | X Y — 1'X4' CEILING/PENDANT–MOUNTED FLUORESCENT FIXTURE NORMAL/EMERGENCY |
| | | | | X Y — 1'X4' WALL–MOUNTED FLUORESCENT FIXTURE NORMAL/EMERGENCY |
| | | | | X Y — EMERGENCY LIGHT FIXTURE, 2 ATTACHED HEADS AS SHOWN |
| | | | | X Y — EMERGENCY LIGHT, REMOTE MOUNTED HEAD |
| | | | | X Y — X Y — DOUBLE–FACED CEILING OR WALL–MOUNTED EXIT LIGHT; DIRECTIONAL ARROWS (IF REQUIRED) AS INDICATED ON PLANS |

| | | | | |
|---|---|---|---|---|
| 7 1/2 OR HP | MOTOR WITH DESIGN HORSEPOWER (WHEN INDICATED) | X Y — X Y | SINGLE–FACED CEILING OR WALL–MOUNTED EXIT LIGHT; DIRECTIONAL ARROWS (IF REQUIRED) AS INDICATED ON PLANS | GROUND CABLE |
| G | GENERATOR | X Y | AREA OR ROADWAY LIGHT – POLE–MOUNTED | GROUND ROD |
| ATS | TRANSFER SWITCH, CURRENT RATING, AND NUMBER OF POLES AS NOTED<br>ATS – AUTOMATIC<br>MTS – MANUAL | | LIGHTING FIXTURE SUBSCRIPTS:<br>X – INDICATES FIXTURE TYPE PER LIGHTING FIXTURE SCHEDULE<br>Y – INDICATES CIRCUIT NUMBER FROM PANELBOARD<br>z – INDICATES CONTROLLING SWITCH (IF REQUIRED) | T — THERMOSTAT |
| | TRANSFORMER<br>Δ 3–PHASE, 3–WIRE DELTA CONNECTION<br>Y 3–PHASE, 4–WIRE GROUNDED WYE CONNECTION | Y X | TOGGLE SWITCH<br>SUBSCRIPTS:<br>X – INDICATES TYPE<br>NONE – SINGLE POLE<br>3 – THREE–WAY<br>4 – FOUR–WAY<br>HP – TOGGLE SWITCH, HORSEPOWER RATED<br>K – KEY SWITCH<br>TE – MANUAL MOTOR STARTER WITH THERMAL ELEMENT<br>P – PILOT LIGHT<br>L – LIGHTED HANDLE<br>Y – INDICATES CONTROLLING SWITCH (IF REQUIRED) | |
| LP100 208/120V 3ø, 4W | SWITCHBOARD OR PANELBOARD; NAME, VOLTAGE, PHASE, NUMBER OF WIRES WHEN INDICATED | | SITE LIGHT, TYPE 1 | |
| | | | COILED 20FT OF CAT 6 CABLE FOR DATA CONNECTION | |
| | | | SPECIAL–PURPOSE RECEPTACLE AS DEFINED ON PLANS | |
| | | | SPECIAL–PURPOSE RECEPTACLE FLOOR MOUNTED | |
| | | | PLUG–IN RECEPTACLE STRIP, QUANTITY AND SPACING OF RECEPTACLES AS NOTED OR SPECIFIED | |
| | | X | TELECOMMUNICATIONS OUTLET JUNCTION BOX<br>X – INDICATES NUMBER OF PORTS | |
| | | X Y | QUAD–DUPLEX RECEPTACLE, TWO NEMA 5–20R UNDER COMMON COVER PLATE | |
| | | X Y | DUPLEX RECEPTACLE, NEMA 5–20R | |
| | | X Y | DUPLEX RECEPTACLE, NEMA 5–20R, FLOOR MOUNTED | |
| | | X Y | SIMPLEX RECEPTACLE, NEMA 5–20R | |
| | | X Y | SIMPLEX RECEPTACLE, 208V, 1ø | |
| | | | SUBSCRIPTS:<br>X – INDICATES TYPE<br>GFCI – GROUND FAULT CIRCUIT INTERRUPTER<br>Y – INDICATES CIRCUIT NUMBER FROM PANELBOARD | |
| | | | CONDUIT TURNING UP | |
| | | | CONDUIT TURNING DOWN | |
| | | | HOME RUN TO PANEL, 2 #12, 1 #12G IN 3/4"C UNLESS OTHERWISE NOTED | |
| | | | CIRCUIT RUN BETWEEN DEVICES EXPOSED IN NON–ARCHITECTURALLY FINISHED AREAS; CONCEALED IN ARCHITECTURALLY FINISHED AREAS. CONDUIT AND CONDUCTOR SIZES SHALL BE THE SAME AS THE HOMERUN FOR THE CIRCUIT. | |
| | | | CONDUIT RUN BETWEEN DEVICES CONCEALED IN NON–ARCHITECTURALLY FINISHED AREAS OR UNDER FLOOR SLAB. CONDUIT AND CONDUCTOR SIZES SHALL BE THE SAME AS THE HOMERUN FOR THE CIRCUIT. | |
| | | | CIRCUIT HASH MARKS (WHEN INDICATED); LONG, SHORT, SINGLE DOT, AND DOUBLE DOT REPRESENT PHASE, NEUTRAL, EQUIPMENT GROUND, AND ISOLATED EQUIPMENT GROUND, RESPECTIVELY. #12 IN 3/4" CONDUIT UNLESS OTHERWISE INDICATED. | |
| | | | CIRCUIT CONTINUATION | |
| | | | CONDUIT STUBBED OUT AND CAPPED | |
| | | XXX | CONDUIT TAG OR CIRCUIT NUMBER – WIRE AND CONDUIT SIZE AS SPECIFIED IN CIRCUIT SCHEDULE ON THE SHEETS | |

## GENERAL NOTES:

1. THIS IS A STANDARD ELECTRICAL SYMBOLOGY SHEET. NOT ALL SYMBOLS MAY BE USED ON THIS PROJECT.
2. IN GENERAL CONDUIT ROUTING IS NOT SHOWN ON THE PLANS. THE CONTRACTOR SHALL BE RESPONSIBLE FOR ROUTING ALL CONDUITS INCLUDING THOSE SHOWN ON ONE LINE AND HOMERUNS. SEE SPECIFICATIONS FOR CONDUIT INSTALLATION REQUIREMENTS. CONDUIT ROUTINGS AND STUB–UP LOCATIONS THAT ARE SHOWN ARE APPROXIMATE, EXACT ROUTINGS SHALL BE AS REQUIRED FOR EQUIPMENT FURNISHED.
3. WHEN BRANCH CIRCUITS ARE NOT SHOWN ON THE PLANS THE CONTRACTOR SHALL FURNISH AND INSTALL ALL CONDUITS AND CONDUCTORS REQUIRED. CONDUIT AND CONDUCTOR SIZES SHALL BE THE SAME AS THE HOMERUN FOR THE BRANCH CIRCUIT.
4. PHANTOM LINES ARE USED TO INDICATE EXISTING COMPONENTS OR TO DE–EMPHASIZE PROPOSED IMPROVEMENTS TO HIGHLIGHT SELECTED TRADE WORK. REFER TO CONTEXT OF EACH SHEET FOR USAGE.
5. SEE P&ID LEGEND SHEET FOR PROJECT–SPECIFIC EQUIPMENT SYMBOLS, EQUIPMENT ABBREVIATIONS, ABBREVIATIONS.

FILE: 215786–00E001.dwg
DATE: Oct 06, 2015–7:23:10pm, rsnider

HDR Engineering, Inc.

| ISSUE | DATE | DESCRIPTION |
|---|---|---|
| A | JUNE 2015 | ISSUED FOR BID |

| | |
|---|---|
| PROJECT MANAGER | C. OLSON |
| DESIGNED | W.F. ETTLICH |
| DESIGNED | |
| CHECKED | L.D. SMITHEY |
| DRAWN | E.G. SESPENE |
| DATE | JUNE 30, 2015 |
| PROJECT NUMBER | 215786 |

REGISTERED PROFESSIONAL ENGINEER — WILLIAM F. ETTLICH — NO. 07625 EXP. 09/30/16 — ELECTRICAL — STATE OF CALIFORNIA — 06-30-15

CITY OF PINOLE CALIFORNIA 1903

PINOLE/HERCULES
WATER POLLUTION
CONTROL PLANT UPGRADE
CLIENT PN

**ELECTRICAL**

**SYMBOLS LEGEND**

0 1" 2"

| | |
|---|---|
| FILENAME | 215786–00E001 |
| SCALE | NONE |

SHEET **00E001**

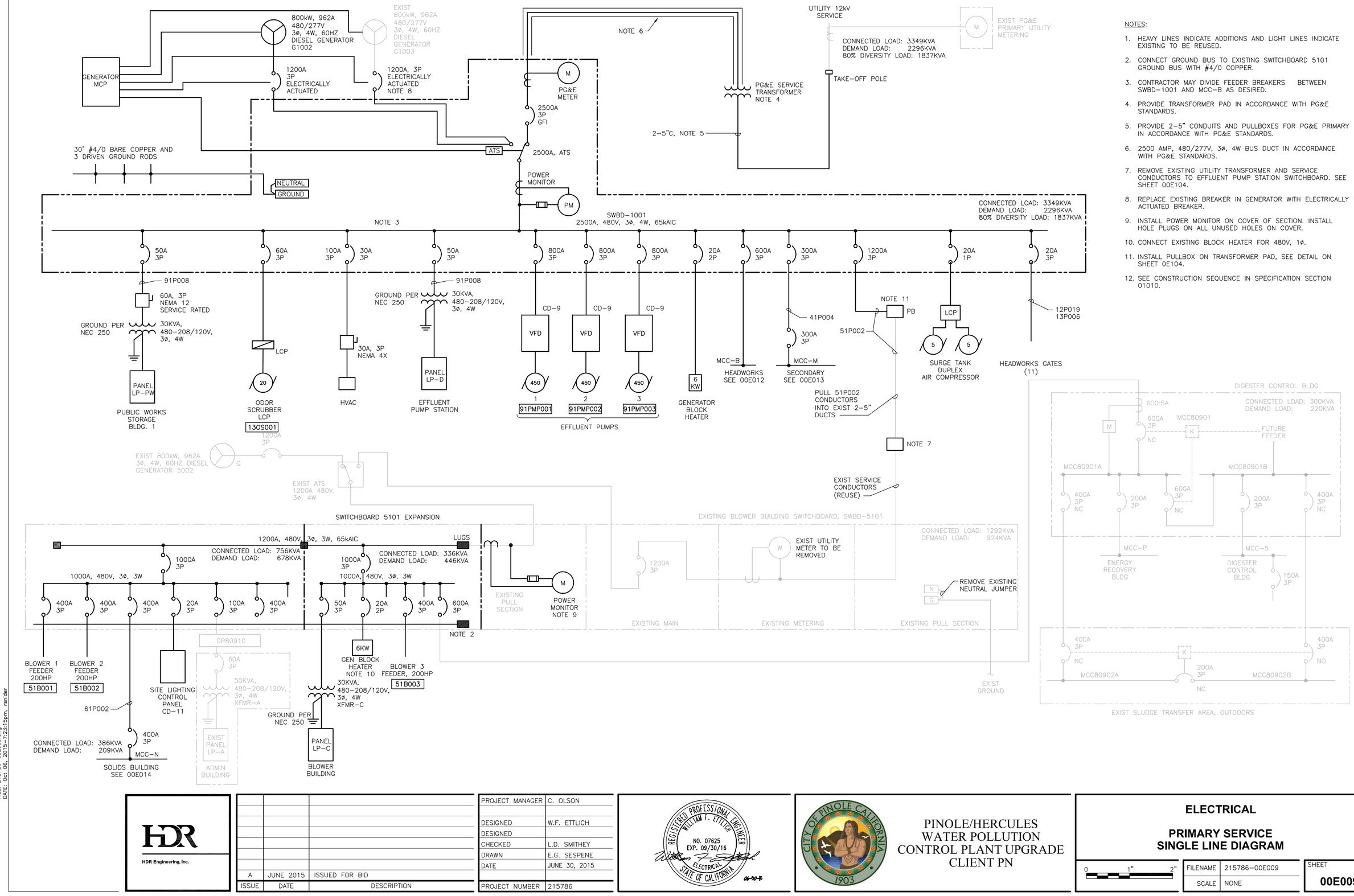


NOTES:

1. HEAVY LINES INDICATE ADDITIONS AND LIGHT LINES INDICATE EXISTING TO BE REUSED.
2. CONNECT GROUND BUS TO EXISTING SWITCHBOARD 5101 GROUND BUS WITH #4/0 COPPER.
3. CONTRACTOR MAY DIVIDE FEEDER BREAKERS BETWEEN SWBD-1001 AND MCC-B AS DESIRED.
4. PROVIDE TRANSFORMER PAD IN ACCORDANCE WITH PG&E STANDARDS.
5. PROVIDE 2-5" CONDUITS AND PULLBOXES FOR PG&E PRIMARY IN ACCORDANCE WITH PG&E STANDARDS.
6. 2500 AMP, 480/277V, 3ø, 4W BUS DUCT IN ACCORDANCE WITH PG&E STANDARDS.
7. REMOVE EXISTING UTILITY TRANSFORMER AND SERVICE CONDUCTORS TO EFFLUENT PUMP STATION SWITCHBOARD. SEE SHEET 00E104.
8. REPLACE EXISTING BREAKER IN GENERATOR WITH ELECTRICALLY ACTUATED BREAKER.
9. INSTALL POWER MONITOR ON COVER OF SECTION. INSTALL HOLE PLUGS ON ALL UNUSED HOLES ON COVER.
10. CONNECT EXISTING BLOCK HEATER FOR 480V, 1ø.
11. INSTALL PULLBOX ON TRANSFORMER PAD, SEE DETAIL ON SHEET 0E104.
12. SEE CONSTRUCTION SEQUENCE IN SPECIFICATION SECTION 01010.

FILE: 215786-00E009.dwg
DATE: Oct 06, 2015-7:23:15pm, rsnider

HDR Engineering, Inc.

| ISSUE | DATE | DESCRIPTION |
|---|---|---|
| A | JUNE 2015 | ISSUED FOR BID |

| | |
|---|---|
| PROJECT MANAGER | C. OLSON |
| | |
| DESIGNED | W.F. ETTLICH |
| DESIGNED | |
| CHECKED | L.D. SMITHEY |
| DRAWN | E.G. SESPENE |
| DATE | JUNE 30, 2015 |
| | |
| PROJECT NUMBER | 215786 |

REGISTERED PROFESSIONAL ENGINEER
WILLIAM F. ETTLICH
NO. 07625
EXP. 09/30/16
ELECTRICAL
STATE OF CALIFORNIA
06-30-15

CITY OF PINOLE CALIFORNIA 1903

PINOLE/HERCULES
WATER POLLUTION
CONTROL PLANT UPGRADE
CLIENT PN

**ELECTRICAL**

**PRIMARY SERVICE SINGLE LINE DIAGRAM**

0 1" 2"

| | |
|---|---|
| FILENAME | 215786-00E009 |
| SCALE | NONE |

SHEET **00E009**

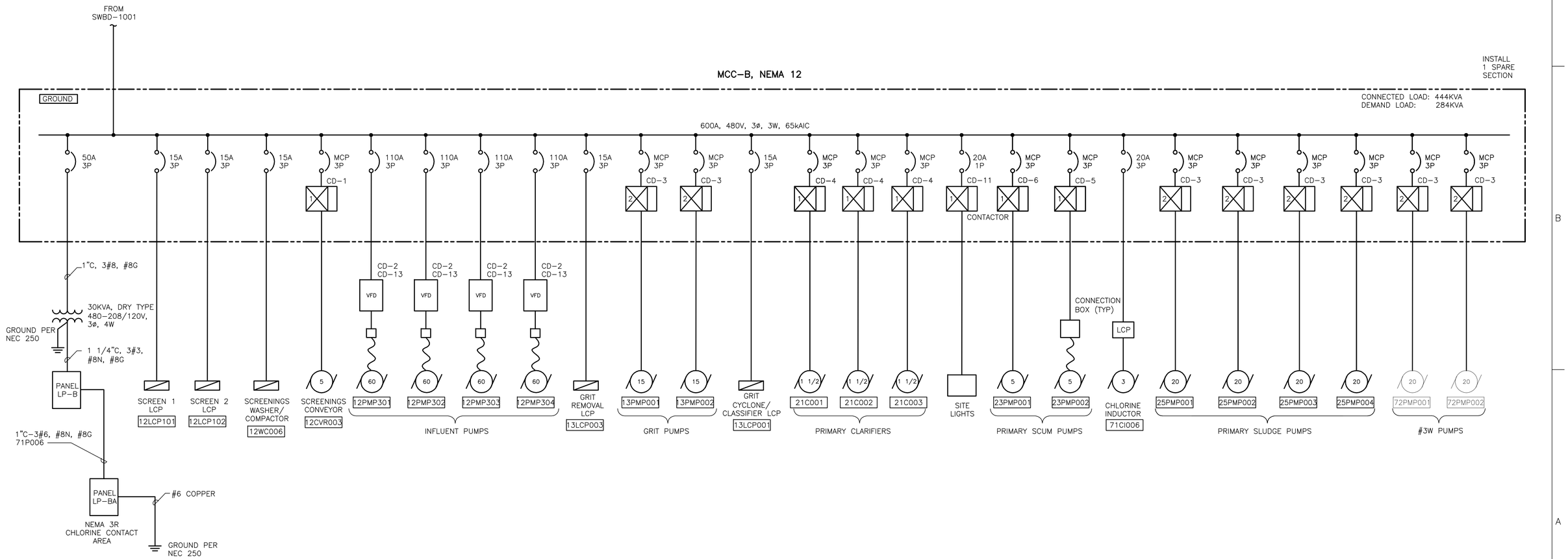


FILE: 215786-00E012.dwg
DATE: Oct 06, 2015-7:23:20pm rsnider

HDR Engineering, Inc.

| ISSUE | DATE | DESCRIPTION |
|---|---|---|
| A | JUNE 2015 | ISSUED FOR BID |

| | |
|---|---|
| PROJECT MANAGER | C. OLSON |
| DESIGNED | W.F. ETTLICH |
| DESIGNED | |
| CHECKED | L.D. SMITHEY |
| DRAWN | E.G. SESPENE |
| DATE | JUNE 30, 2015 |
| PROJECT NUMBER | 215786 |

REGISTERED PROFESSIONAL ENGINEER WILLIAM F. ETTLICH NO. 07625 EXP. 09/30/16 ELECTRICAL STATE OF CALIFORNIA 06-30-15

CITY OF PINOLE CALIFORNIA 1903

PINOLE/HERCULES
WATER POLLUTION
CONTROL PLANT UPGRADE
CLIENT PN

**ELECTRICAL**

**MCC-B**
**SINGLE LINE DIAGRAM**

0 1" 2"

| | |
|---|---|
| FILENAME | 215786-00E012 |
| SCALE | NONE |

SHEET **00E012**

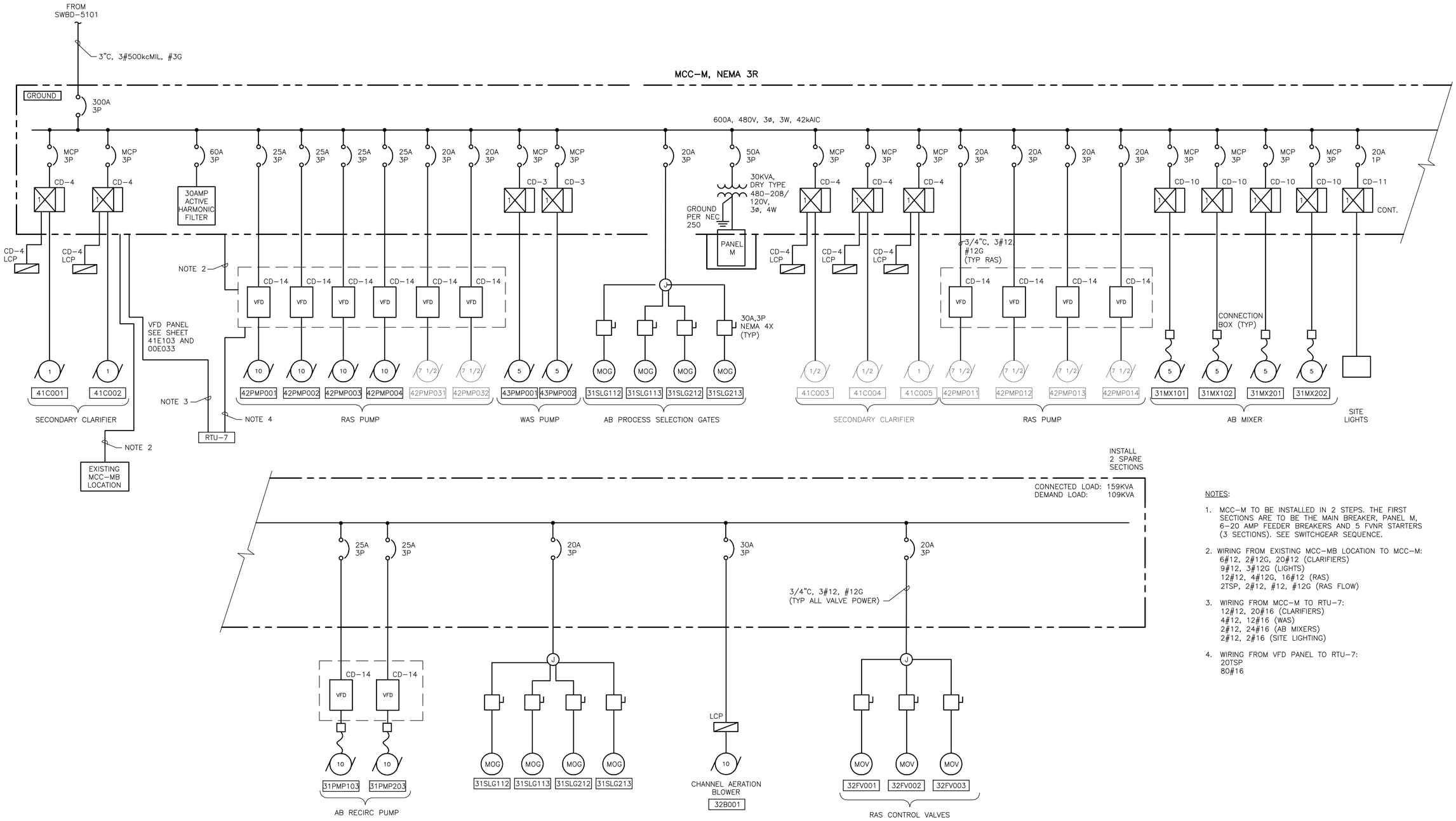


NOTES:

1. MCC-M TO BE INSTALLED IN 2 STEPS. THE FIRST SECTIONS ARE TO BE THE MAIN BREAKER, PANEL M, 6-20 AMP FEEDER BREAKERS AND 5 FVNR STARTERS (3 SECTIONS). SEE SWITCHGEAR SEQUENCE.
2. WIRING FROM EXISTING MCC-MB LOCATION TO MCC-M:
   6#12, 2#12G, 20#12 (CLARIFIERS)
   9#12, 3#12G (LIGHTS)
   12#12, 4#12G, 16#12 (RAS)
   2TSP, 2#12, #12, #12G (RAS FLOW)
3. WIRING FROM MCC-M TO RTU-7:
   12#12, 20#16 (CLARIFIERS)
   4#12, 12#16 (WAS)
   2#12, 24#16 (AB MIXERS)
   2#12, 2#16 (SITE LIGHTING)
4. WIRING FROM VFD PANEL TO RTU-7:
   20TSP
   80#16

FILE: 215786-00E013.dwg
DATE: Oct 06, 2015-7:23:25pm, ranider

HDR Engineering, Inc.

| ISSUE | DATE | DESCRIPTION |
|---|---|---|
| A | JUNE 2015 | ISSUED FOR BID |

| | |
|---|---|
| PROJECT MANAGER | C. OLSON |
| | |
| DESIGNED | W.F. ETTLICH |
| DESIGNED | |
| CHECKED | L.D. SMITHEY |
| DRAWN | E.G. SESPENE |
| DATE | JUNE 30, 2015 |
| | |
| PROJECT NUMBER | 215786 |

REGISTERED PROFESSIONAL ENGINEER
WILLIAM F. ETTLICH
NO. 07625
EXP. 09/30/16
ELECTRICAL
STATE OF CALIFORNIA
06-30-15

CITY OF PINOLE CALIFORNIA 1903

PINOLE/HERCULES
WATER POLLUTION
CONTROL PLANT UPGRADE
CLIENT PN

**ELECTRICAL**

**SINGLE LINE DIAGRAM**

0 1" 2"

| | |
|---|---|
| FILENAME | 215786-00E013 |
| SCALE | NONE |

SHEET **00E013**

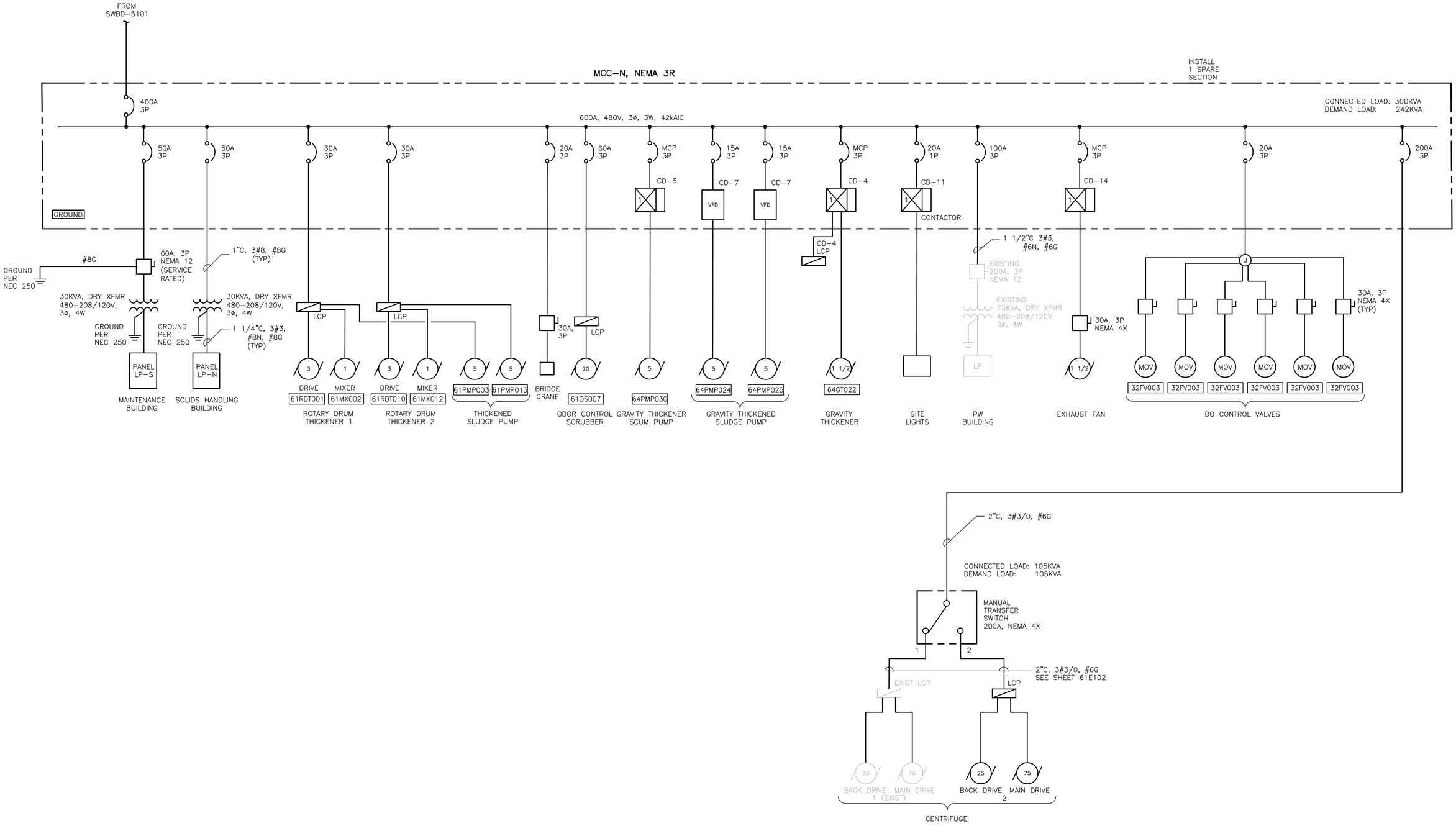


FILE: 215786-00E014.dwg
DATE: Oct 06, 2015-7:23:31pm, rsnider

HDR Engineering, Inc.

| ISSUE | DATE | DESCRIPTION |
|---|---|---|
| A | JUNE 2015 | ISSUED FOR BID |

| | |
|---|---|
| PROJECT MANAGER | C. OLSON |
| DESIGNED | W.F. ETTLICH |
| DESIGNED | |
| CHECKED | L.D. SMITHEY |
| DRAWN | E.G. SESPENE |
| DATE | JUNE 30, 2015 |
| PROJECT NUMBER | 215786 |

REGISTERED PROFESSIONAL ENGINEER
WILLIAM F. ETTLICH
NO. 07625
EXP. 09/30/16
ELECTRICAL
STATE OF CALIFORNIA
06-30-15

CITY OF PINOLE CALIFORNIA 1903

PINOLE/HERCULES
WATER POLLUTION
CONTROL PLANT UPGRADE
CLIENT PN

**ELECTRICAL**

**SINGLE LINE DIAGRAM**

0 1" 2"

| FILENAME | 215786-00E014 |
|---|---|
| SCALE | NONE |

SHEET **00E014**

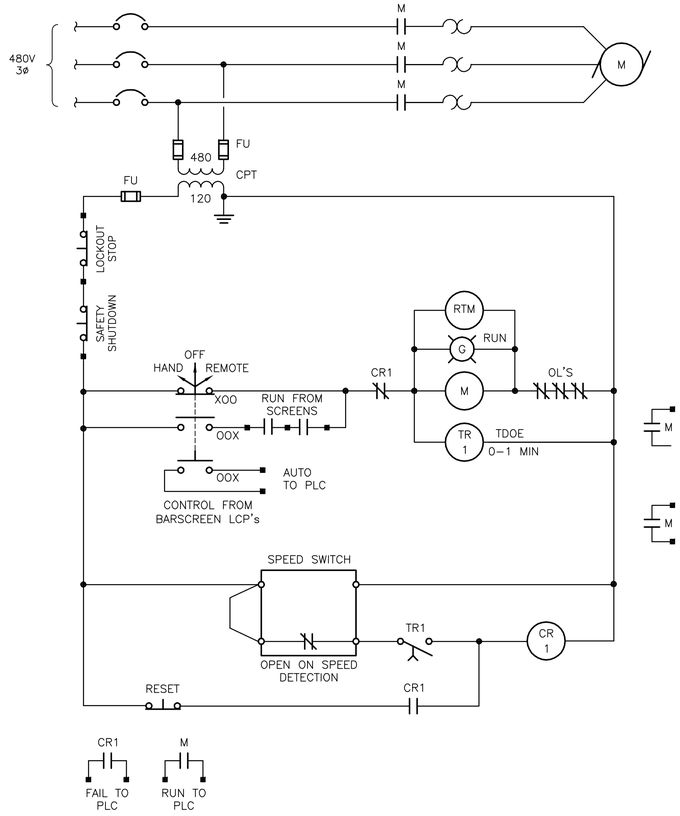


## CD-1: CONVEYOR

NOT TO SCALE 12CVR003

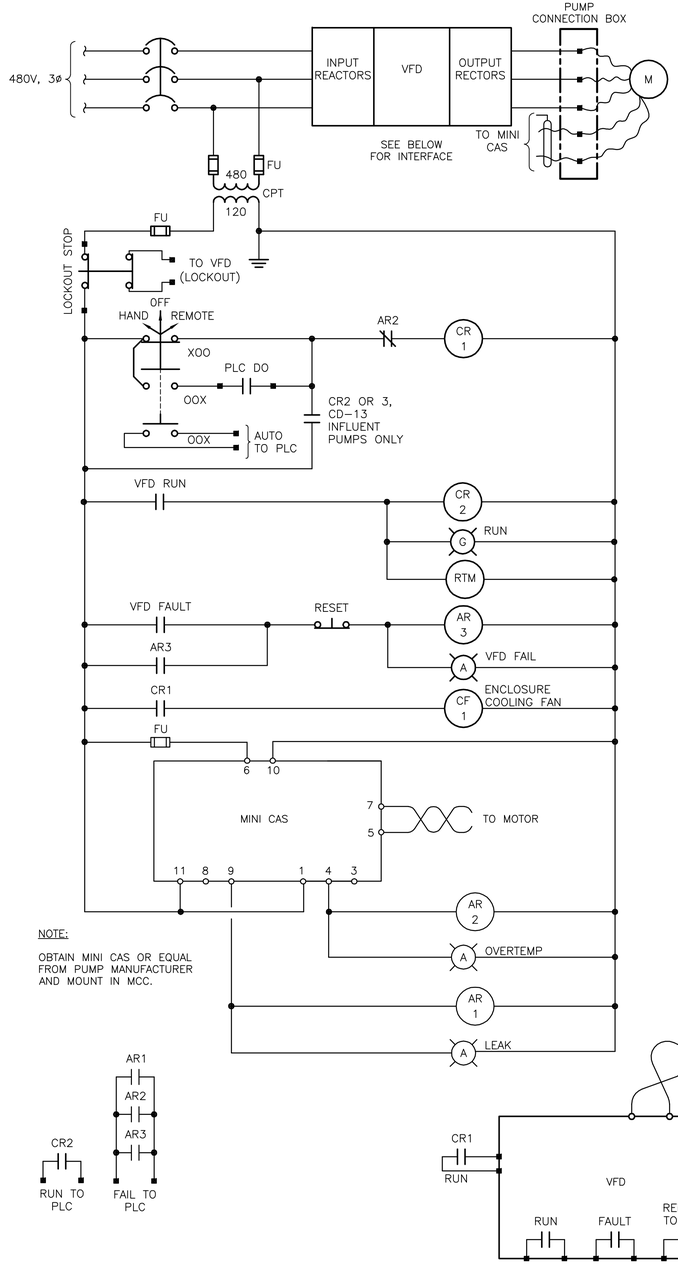


## CD-2: VFD DRIVEN SUBMERSIBLE PUMP

NOT TO SCALE SEE NOTE 1

NOTES:

1. FOR CD-2 AND CD-8 FOR MCC-M DRIVES WITH VFD'S MOUNTED IN SEPARATE VFD PANEL: ONLY THE VFD IS MOUNTED IN THE SEPARATE PANEL, THE REST OF THE CD-2 EQUIPMENT INCLUDING BREAKERS, CPT, RELAYS, LIGHTS, SWITCHES, MINI CAS AND RTM ARE MOUNTED IN MCC COMPARTMENTS. RUN INTERCONNECTING WIRING AS FOLLOWS:
   a. VFD TO RTU-7: 2-TSP, 2#16
   b. VFD TO MCC: 10#12, #12G
   c. MCC TO RTU-7: 6#16

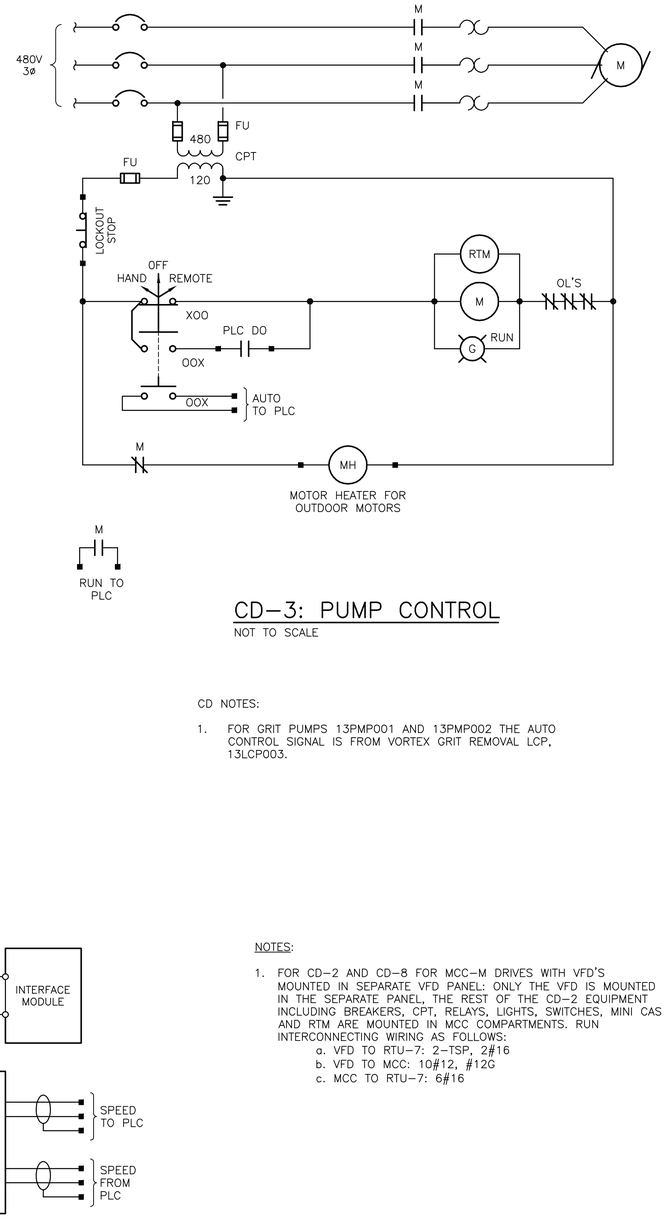


## CD-3: PUMP CONTROL

NOT TO SCALE

CD NOTES:

1. FOR GRIT PUMPS 13PMP001 AND 13PMP002 THE AUTO CONTROL SIGNAL IS FROM VORTEX GRIT REMOVAL LCP, 13LCP003.

FILE: 215786-00E023.dwg
DATE: Oct 06, 2015-7:23:36pm, rsnider

HDR Engineering, Inc.

| ISSUE | DATE | DESCRIPTION |
|---|---|---|
| A | JUNE 2015 | ISSUED FOR BID |

| | |
|---|---|
| PROJECT MANAGER | C. OLSON |
| DESIGNED | W.F. ETTLICH |
| DESIGNED | |
| CHECKED | L.D. SMITHEY |
| DRAWN | E.G. SESPENE |
| DATE | JUNE 30, 2015 |
| PROJECT NUMBER | 215786 |

REGISTERED PROFESSIONAL ENGINEER
WILLIAM F. ETTLICH
NO. 07625
EXP. 09/30/16
ELECTRICAL
STATE OF CALIFORNIA
06-30-15

CITY OF PINOLE CALIFORNIA 1903

PINOLE/HERCULES
WATER POLLUTION
CONTROL PLANT UPGRADE
CLIENT PN

**ELECTRICAL**

**CONTROL DIAGRAMS 1**

0 1" 2"

| FILENAME | 215786-00E023 |
|---|---|
| SCALE | NONE |

SHEET **00E023**

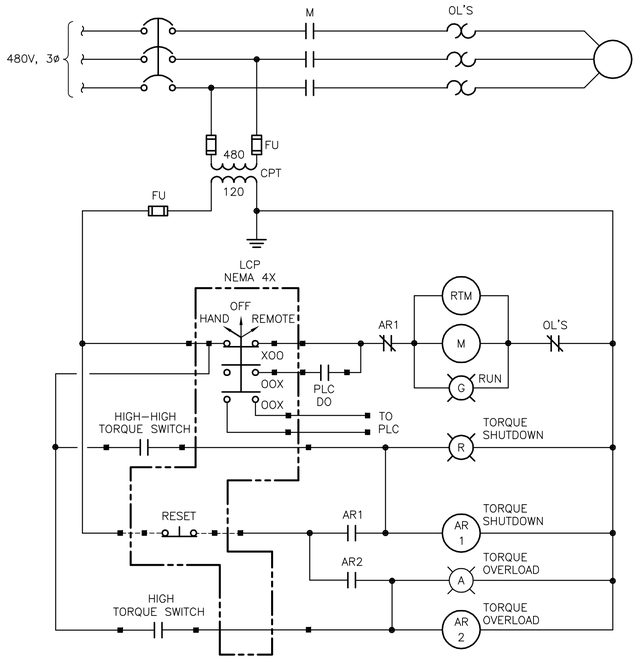


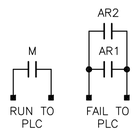


## CD-4: PRIMARY/SECONDARY CLARIFIER, THICKENER

NOT TO SCALE

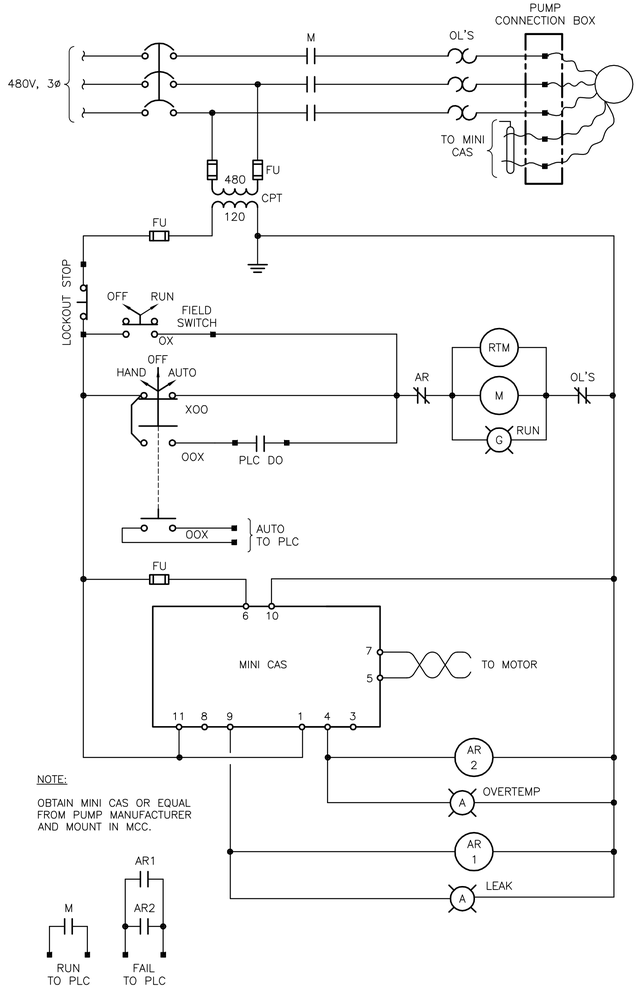





## CD-5: SUBMERSIBLE SCUM PUMP

NOT TO SCALE

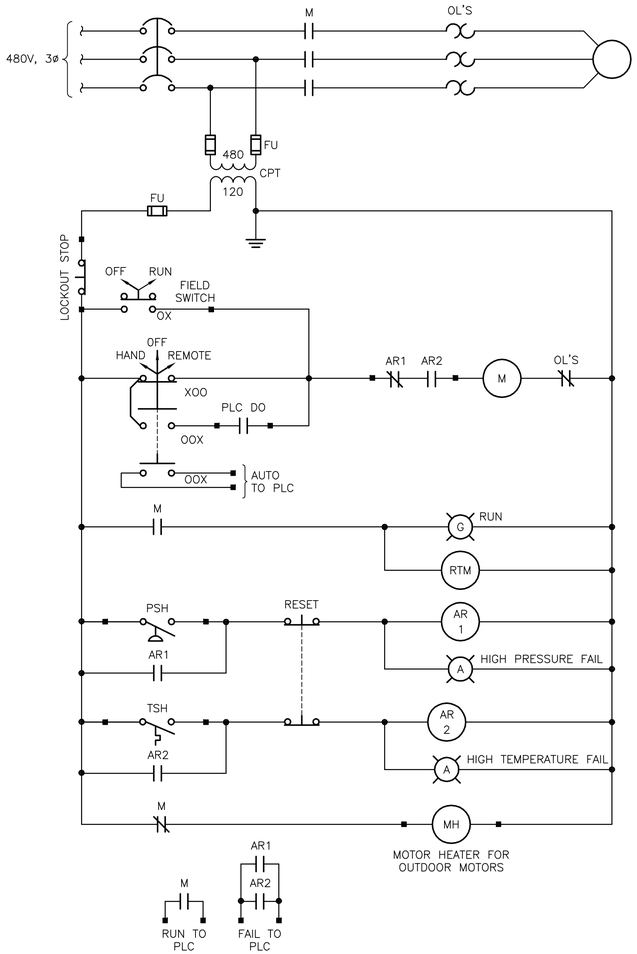





## CD-6: SCUM PUMP

NOT TO SCALE

SAME AS CD-5 EXCEPT NO OFF-RUN SWITCH

## CD-10: SUBMERSIBLE FIXED SPEED PUMP

NOT TO SCALE

FILE: 215786-00E024.dwg
DATE: Oct 06, 2015-7:23:41pm, rander

HDR Engineering, Inc.

| ISSUE | DATE | DESCRIPTION |
|---|---|---|
| A | JUNE 2015 | ISSUED FOR BID |

| | |
|---|---|
| PROJECT MANAGER | C. OLSON |
| DESIGNED | W.F. ETTLICH |
| DESIGNED | |
| CHECKED | L.D. SMITHEY |
| DRAWN | E.G. SESPENE |
| DATE | JUNE 30, 2015 |
| PROJECT NUMBER | 215786 |

REGISTERED PROFESSIONAL ENGINEER
WILLIAM F. ETTLICH
NO. 07625
EXP. 09/30/16
ELECTRICAL
STATE OF CALIFORNIA
06-30-15

CITY OF PINOLE CALIFORNIA 1903

PINOLE/HERCULES
WATER POLLUTION
CONTROL PLANT UPGRADE
CLIENT PN

**ELECTRICAL**

**CONTROL DIAGRAMS 2**

0 1" 2"

| | |
|---|---|
| FILENAME | 215786-00E024 |
| SCALE | NONE |

SHEET
**00E024**

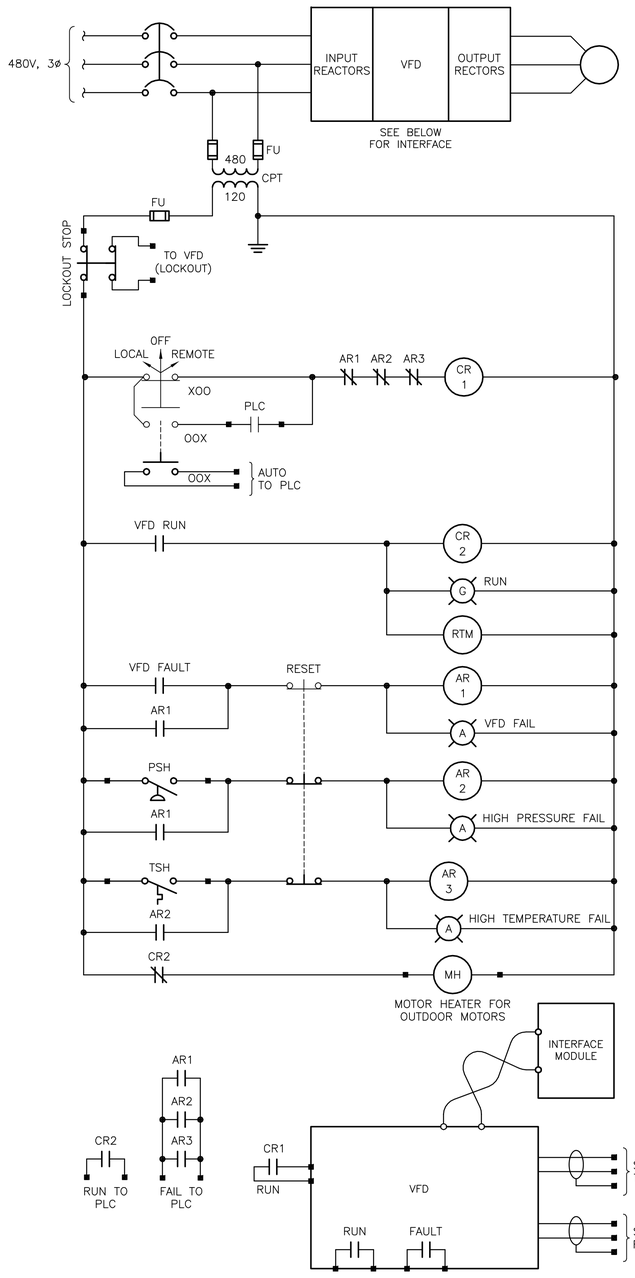


## CD–7: SLUDGE PUMP

NOT TO SCALE

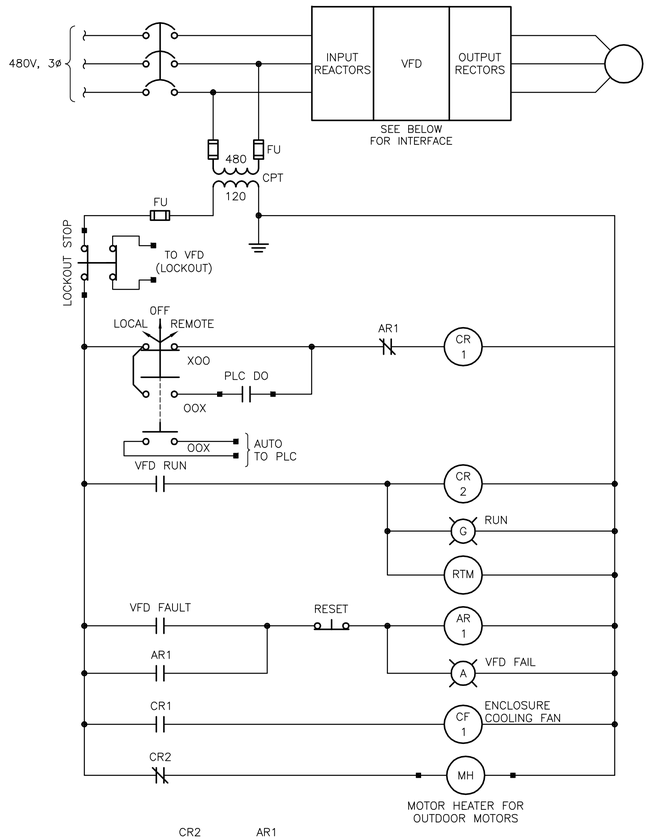


## CD–8: VFD PUMP

NOT TO SCALE SEE NOTE 2, 00E023

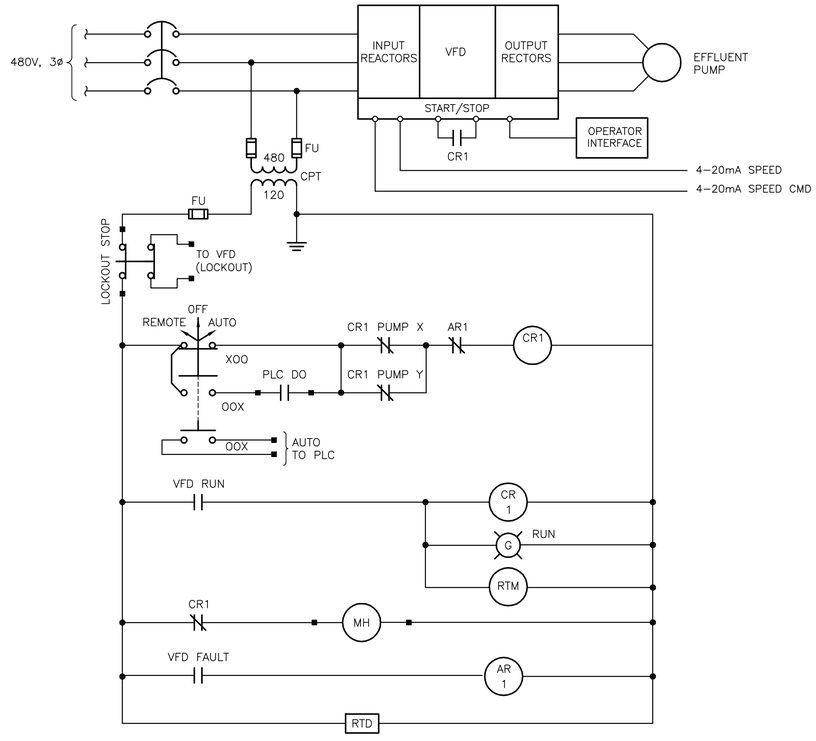


INTERLOCK TABLE
PUMP 1 – X=PUMP 2, Y=PUMP 3
PUMP 2 – X=PUMP 1, Y=PUMP 3
PUMP 3 – X=PUMP 1, Y=PUMP 2

WIRE AND CONNECT PUMP MOTOR WINDING AND BEARING RTD'S, 8 TOTAL

## CD–9: EFFLUENT PUMP

NOT TO SCALE

FILE: 215786–00E025.dwg
DATE: Oct 06, 2015–7:23:46pm, rsnider

HDR Engineering, Inc.

| ISSUE | DATE | DESCRIPTION |
|---|---|---|
| A | JUNE 2015 | ISSUED FOR BID |

| | |
|---|---|
| PROJECT MANAGER | C. OLSON |
| | |
| DESIGNED | W.F. ETTLICH |
| DESIGNED | |
| CHECKED | L.D. SMITHEY |
| DRAWN | E.G. SESPENE |
| DATE | JUNE 30, 2015 |
| | |
| PROJECT NUMBER | 215786 |

REGISTERED PROFESSIONAL ENGINEER
WILLIAM F. ETTLICH
NO. 07625
EXP. 09/30/16
ELECTRICAL
STATE OF CALIFORNIA
06-30-15

CITY OF PINOLE CALIFORNIA 1903

PINOLE/HERCULES
WATER POLLUTION
CONTROL PLANT UPGRADE
CLIENT PN

**ELECTRICAL**

**CONTROL DIAGRAMS 3**

0 1" 2"

| | |
|---|---|
| FILENAME | 215786–00E025 |
| SCALE | NONE |

SHEET **00E025**

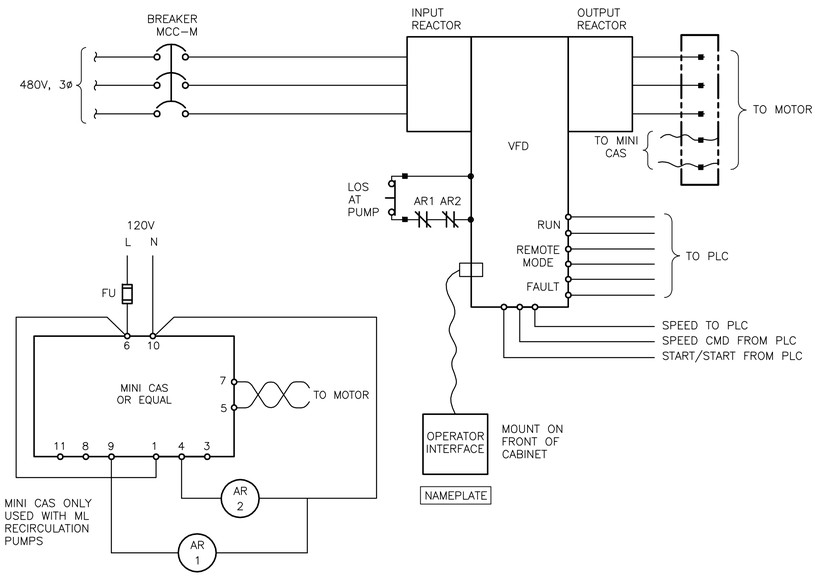


## CD–14: RAS, AB RECIRCULATION PUMPS, (VFD DRIVEN)

NOT TO SCALE

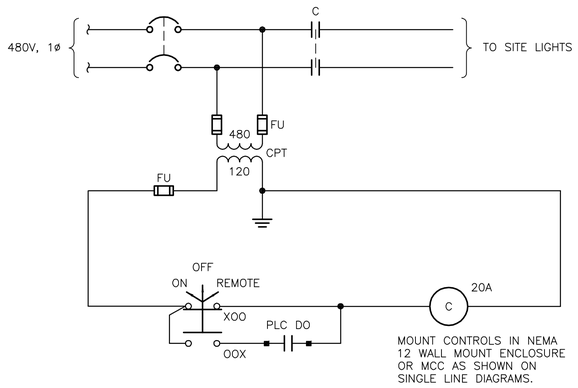


## CD11: SITE LIGHT CONTROL

NOT TO SCALE

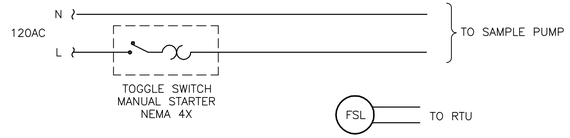


## CD12: SINGLE PHASE SAMPLE PUMP

NOT TO SCALE

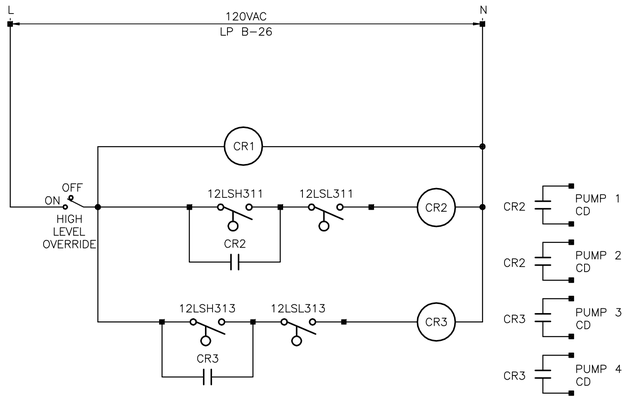


## CD13: INFLUENT PUMP HIGH LEVEL CONTROL

NOT TO SCALE

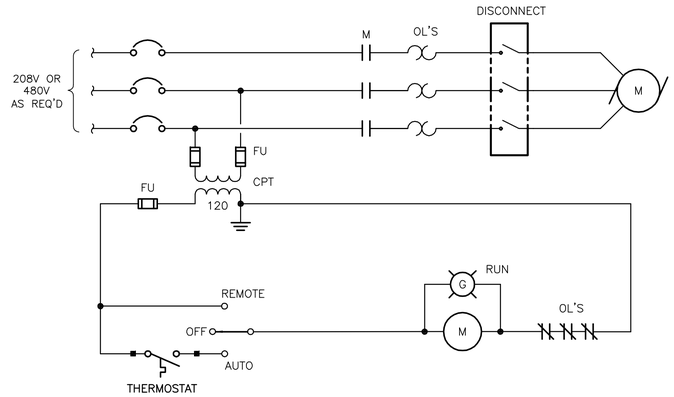


## CD–14 EXHAUST FAN

NOT TO SCALE

FILE: 215786–00E026.dwg
DATE: Oct 06, 2015–7:23:51pm, rsnider

HDR Engineering, Inc.

| ISSUE | DATE | DESCRIPTION |
|---|---|---|
| A | JUNE 2015 | ISSUED FOR BID |

| | |
|---|---|
| PROJECT MANAGER | C. OLSON |
| | |
| DESIGNED | W.F. ETTLICH |
| DESIGNED | |
| CHECKED | L.D. SMITHEY |
| DRAWN | E.G. SESPENE |
| DATE | JUNE 30, 2015 |
| | |
| PROJECT NUMBER | 215786 |

REGISTERED PROFESSIONAL ENGINEER
WILLIAM F. ETTLICH
NO. 07625
EXP. 09/30/16
ELECTRICAL
STATE OF CALIFORNIA
06-30-15

CITY OF PINOLE CALIFORNIA 1903

PINOLE/HERCULES
WATER POLLUTION
CONTROL PLANT UPGRADE
CLIENT PN

**ELECTRICAL**

**CONTROL DIAGRAMS 4**

0 1" 2"

| | |
|---|---|
| FILENAME | 215786–00E026 |
| SCALE | NONE |

SHEET
**00E026**

| PANEL: LP–B (ELECTRICAL BLDG) | FEEDER ENTRANCE: | MOUNTING: WALL MOUNTNG |
|---|---|---|
| SERVICE: 120/208V, 3ø, 4W | | SERVICE ENTRANCE LABEL: |
| MAIN DEVICE: 100A MAIN BREAKER | | |

| CKT NO. | CIRCUIT IDENTIFICATION | CB AMPS | VA PER PHASE A | VA PER PHASE B | VA PER PHASE C | CB AMPS | CIRCUIT IDENTIFICATION | CKT NO. |
|---|---|---|---|---|---|---|---|---|
| 1 | LIGHTS | 20/1 | 500 | | | 20/1 | OUTLETS | 2 |
| 3 | SPARE | 20/1 | 500 | | | 20/1 | OUTLETS | 4 |
| 5 | GENERATOR BATTERY CHARGER | 20/1 | | | 100 | 20/1 | SITE LIGHT OUTLETS | 6 |
| 7 | RTU–2 | 20/1 | 200 | | 500 | 30/1 | GENERATOR PARALLELING CONT | 8 |
| 9 | RTU–2 | 20/1 | | 200 | | 20/1 | FERRIC CHLORIDE FEEDER 1 | 10 |
| 11 | 76LSH–005 | 20/1 | | 300 | | 20/1 | FERRIC CHLORIDE FEEDER 2 | 12 |
| 13 | BISULFITE HEATER (GFI) | 15/1 | 900 | | 100 | 20/1 | PRIMARY CLARIFIER 3 LIGHTS | 14 |
| 15 | BISULFITE HEATER (GFI) | 15/1 | | 900 | 300 | 20/1 | PRIMARY CLARIFIER OUTLETS | 16 |
| 17 | SPARE | 20/1 | | | 500 | 20/1 | PRIMARY CLARIFIER LIGHTS | 18 |
| 19 | HEADWORKS LIGHTS | 20/1 | 500 | | 400 | 20/1 | SAMPLER, 11CS005 | 20 |
| 21 | HEADWORKS OUTLETS | 20/1 | | 500 | | 20/1 | SODIUM HYDROXIDE FEEDER 1 | 22 |
| 23 | CHLORINE CONTACT CONTROL BUILDING | 50/3 | | | 1000 | 20/1 | SODIUM HYDROXIDE FEEDER 2 | 24 |
| 25 | | | 1000 | | 300 | 20/1 | INFLUENT PUMP HIGH LEVEL CD | 26 |
| 27 | | | | 1000 | 1000 | 20/1 | HEAT TAPE, 77LSH105 | 28 |
| 29 | 72STR008, 72FIT007 | 20/1 | | | 200 | 20/1 | SPARE | 30 |
| 31 | SPARE | 20/1 | | | | 20/1 | SPARE | 32 |
| 33 | SPARE | 20/1 | | | | 20/1 | SPARE | 34 |
| 35 | SPARE | 20/1 | | | | 20/1 | SPARE | 36 |
| 37 | SPARE | 20/1 | | | | . | SPACE | 38 |
| 39 | SPACE | . | | | | . | SPACE | 40 |
| 41 | SPACE | . | | | | . | SPACE | 42 |
| | EST TOTAL VA PER PHASE | | 4200 | 5200 | 2900 | | | |
| | EST TOTAL PANELBOARD VA | | | | 12,300 | | | |

| PANEL: LP–D (EFFLUENT P.S.) | FEEDER ENTRANCE: | MOUNTING: WALL MOUNTNG |
|---|---|---|
| SERVICE: 120/208V, 3ø, 4W | | SERVICE ENTRANCE LABEL: |
| MAIN DEVICE: 100A MAIN BREAKER | | |

| CKT NO. | CIRCUIT IDENTIFICATION | CB AMPS | VA PER PHASE A | VA PER PHASE B | VA PER PHASE C | CB AMPS | CIRCUIT IDENTIFICATION | CKT NO. |
|---|---|---|---|---|---|---|---|---|
| 1 | LIGHTS | 20/1 | 500 | | | 20/1 | OUTLETS | 2 |
| 3 | GENERATOR BATTERY CHARGER | 20/1 | | 200 | | 20/1 | ANALYZER RACK | 4 |
| 5 | SODIUM HYPOCHLORITE FEEDERS | 20/1 | | | 300 | 20/1 | RTU–8 | 6 |
| 7 | SODIUM HYPOCHLORITE FEEDERS | 20/1 | 300 | | 200 | 30/1 | RTU–8 | 8 |
| 9 | 75LSH–007, 75LSH–107 | 20/1 | | 300 | | 20/1 | DAY FUEL TANK | 10 |
| 11 | SPARE | 20/1 | | | 200 | 20/1 | SURGE TANK LCP | 12 |
| 13 | SODIUM BISULFITE FEEDERS | 20/1 | 300 | | | 50/2 | GENERATOR BLOCK HEATER | 14 |
| 15 | SODIUM BISULFITE FEEDERS | 20/1 | | 300 | | | | 16 |
| 17 | HYPOCHLORITE VALVE | 20/1 | | | 100 | 20/1 | HEAT TAPE (GFI) | 18 |
| 19 | HYPOCHLORITE VALVE | 20/1 | 100 | | 1000 | 20/1 | HEAT TAPE (GFI) | 20 |
| 21 | BISULFITE VALVE | 30/1 | | 100 | | 20/1 | VENTILATION FAN | 22 |
| 23 | BISULFITE VALVE | 20/1 | | | 100 | 20/1 | SAMPLER, 91CS018 | 24 |
| 25 | CONTROL VALVE 3 | 20/1 | 200 | | 200 | 20/1 | ROLLUP DOOR | 26 |
| 27 | LEVEL TRANSMITTER | 20/1 | | 100 | | 20/1 | MANHOLE PUMP | 28 |
| 29 | 3 KW UNIT HEATER | 20/2 | | | 1500 | 20/1 | STRAINER, 92STR006 | 30 |
| 31 | | | 1500 | | 200 | 20/1 | SPARE | 32 |
| 33 | SPARE | 20/1 | | | | 20/1 | SPARE | 34 |
| 35 | SPARE | 30/1 | | | | 20/1 | SPARE | 36 |
| 37 | SPARE | 20/1 | | | | . | SPACE | 38 |
| 39 | SPARE | 20/1 | | | | . | SPACE | 40 |
| 41 | SPARE | 20/1 | | | | . | SPACE | 42 |
| | EST TOTAL VA PER PHASE | | 7100 | 5600 | 3800 | | | |
| | EST TOTAL PANELBOARD VA | | | | 16,500 | | | |

| PANEL: LP–M (SECONDARY AREA) | FEEDER ENTRANCE: | MOUNTING: MCC–M MOUNTNG |
|---|---|---|
| SERVICE: 120/208V, 3ø, 4W | | SERVICE ENTRANCE LABEL: |
| MAIN DEVICE: LUGS ONLY | | |

| CKT NO. | CIRCUIT IDENTIFICATION | CB AMPS | VA PER PHASE A | VA PER PHASE B | VA PER PHASE C | CB AMPS | CIRCUIT IDENTIFICATION | CKT NO. |
|---|---|---|---|---|---|---|---|---|
| 1 | LIGHTS | 20/1 | 500 | | | 20/1 | OUTLETS | 2 |
| 3 | RTU–7 | 20/1 | | 300 | | 20/1 | CLARIFIER 3, 4 & 5 LIGHTS | 4 |
| 5 | RTU–7 | 20/1 | | | 300 | 20/1 | CLARIFIER 3, 4 & 5 OUTLETS | 6 |
| 7 | AERATION BASIN OUTLETS | 20/1 | 500 | | 500 | 20/2 | RTU–7 AIR CONDITIONER | 8 |
| 9 | VFD PANEL AIR CONDITIONER | 20/2 | | 1500 | | | | 10 |
| 11 | | | | | 1500 | 20/1 | VFD PANEL LIGHT | 12 |
| 13 | AB LIGHTS | 20/1 | 200 | | 200 | 20/1 | VFD PANEL OUTLET | 14 |
| 15 | AB OUTLETS | 20/1 | | 500 | | 20/1 | CLARIFIER 1 & 2 LIGHTS | 16 |
| 17 | WAS FLOW METERS | 20/1 | | | 400 | 20/1 | CLARIFIER 1 & 2 OUTLETS | 18 |
| 19 | AB ANALYZERS | 20/1 | 200 | | 500 | 20/1 | WAS CONTROL VALVES | 20 |
| 21 | AB LIGHTS | 20/1 | | 400 | | 20/1 | FIT473, 475 | 22 |
| 23 | AB OUTLETS | 20/1 | | | 200 | 20/1 | SAMPLER, 41CS006 | 24 |
| 25 | RAS FLOW | 20/1 | 200 | | | 20/1 | SAMPLER, 21CS004 | 26 |
| 27 | RAS FLOW | 20/1 | | 200 | | 20/1 | SPARE | 28 |
| 29 | SPARE | 20/1 | | | | 20/1 | SPARE | 30 |
| 31 | SPARE | 20/1 | | | | 20/1 | SPARE | 32 |
| 33 | SPACE | . | | | | . | SPACE | 34 |
| 35 | SPACE | . | | | | . | SPACE | 36 |
| 37 | SPACE | . | | | | . | SPACE | 38 |
| 39 | SPACE | . | | | | . | SPACE | 40 |
| 41 | SPACE | . | | | | . | SPACE | 42 |
| | EST TOTAL VA PER PHASE | | 4500 | 5100 | 3400 | | | |
| | EST TOTAL PANELBOARD VA | | | | 13,000 | | | |

| PANEL: LP–N (SOLIDS HANDLING BLDG | FEEDER ENTRANCE: FEEDER | MOUNTING: WALL MOUNTNG |
|---|---|---|
| SERVICE: 120/208V, 3ø, 4W | SERVICE ENTRANCE LABEL: LABEL | |
| MAIN DEVICE: 100A MAIN BREAKER | | |

| CKT NO. | CIRCUIT IDENTIFICATION | CB AMPS | VA PER PHASE A | VA PER PHASE B | VA PER PHASE C | CB AMPS | CIRCUIT IDENTIFICATION | CKT NO. |
|---|---|---|---|---|---|---|---|---|
| 1 | LIGHTS | 20/1 | 700 | | | 20/1 | OUTLETS | 2 |
| 3 | AB LIGHT OUTLETS | 20/1 | 500 | | | 20/1 | THICKENER LIGHTS | 4 |
| 5 | RTU–4 | 20/1 | | 500 | | 20/1 | THICKENER OUTLETS | 6 |
| 7 | RTU–4 | 20/1 | 300 | | 500 | 20/1 | AB ANALYZERS | 8 |
| 9 | THICKENER POLYMER 1 | 20/1 | | 300 | | 20/1 | OUTLETS | 10 |
| 11 | THICKENER POLYMER 2 | 20/1 | | | 300 | 20/1 | DEWATERING LIGHTS | 12 |
| 13 | LIGHTS | 20/1 | 500 | | 700 | 20/1 | DEWATERING OUTLETS | 14 |
| 15 | HEAT TAPE (GFI) | 20/1 | | 500 | | 20/1 | DEWATERING POLYMER 1 | 16 |
| 17 | HEAT TAPE (GFI) | 20/1 | | | 500 | 20/1 | DEWATERING POLYMER 2 | 18 |
| 19 | SPARE | 20/1 | | | 300 | 20/1 | POLYMER LIGHTS | 20 |
| 21 | SPARE | 30/1 | | | | 20/1 | POLYMER OUTLETS | 22 |
| 23 | SPARE | 20/1 | | | | 20/1 | SPARE | 24 |
| 25 | SPARE | 20/1 | | | | 20/1 | SPARE | 26 |
| 27 | SPARE | 20/1 | | | | 20/1 | SPARE | 28 |
| 29 | SPARE | 20/1 | | | | 20/1 | SPARE | 30 |
| 31 | SPACE | . | | | | . | SPACE | 32 |
| 33 | SPACE | . | | | | . | SPACE | 34 |
| 35 | SPACE | . | | | | . | SPACE | 36 |
| 37 | SPACE | . | | | | . | SPACE | 38 |
| 39 | SPACE | . | | | | . | SPACE | 40 |
| 41 | SPACE | . | | | | . | SPACE | 42 |
| | EST TOTAL VA PER PHASE | | 3400 | 2800 | 2600 | | | |
| | EST TOTAL PANELBOARD VA | | | | 8,800 | | | |

| PANEL: LP–S (MAINTENANCE SHOP) | FEEDER ENTRANCE: FEEDER | MOUNTING: WALL MOUNTNG |
|---|---|---|
| SERVICE: 120/208V, 3ø, 4W | SERVICE ENTRANCE LABEL: LABEL | |
| MAIN DEVICE: 100A MAIN BREAKER | | |

| CKT NO. | CIRCUIT IDENTIFICATION | CB AMPS | VA PER PHASE A | VA PER PHASE B | VA PER PHASE C | CB AMPS | CIRCUIT IDENTIFICATION | CKT NO. |
|---|---|---|---|---|---|---|---|---|
| 1 | LIGHTS | 20/1 | 1000 | | | 20/1 | OUTLETS | 2 |
| 3 | 208V OUTLET | 20/3 | | 500 | | 20/1 | OUTLETS | 4 |
| 5 | | | | | 500 | 20/1 | OUTLETS | 6 |
| 7 | | | 500 | | | 30/1 | OUTLETS | 8 |
| 9 | 208V OUTLET | 20/3 | | 500 | | 20/1 | OUTLETS | 10 |
| 11 | | | | | 500 | 20/1 | SPARE | 12 |
| 13 | | | 500 | | | 20/1 | SAMPLER, 11CS003 | 14 |
| 15 | 208V OUTLET | 20/3 | | 500 | | 20/1 | SAMPLER, 11CS004 | 16 |
| 17 | | | | | 500 | 20/3 | EXHAUST FAN | 18 |
| 19 | | | 500 | | | | | 20 |
| 21 | AIR COMPRESSOR | 30/3 | | 2000 | | | | 22 |
| 23 | | | | | 2000 | 20/1 | SPARE | 24 |
| 25 | | | 2000 | | | 20/1 | SPARE | 26 |
| 27 | SPARE | 20/1 | | | | 20/1 | SPARE | 28 |
| 29 | SPARE | 20/1 | | | | . | SPACE | 30 |
| 31 | SPACE | . | | | | . | SPACE | 32 |
| 33 | SPACE | . | | | | . | SPACE | 34 |
| 35 | SPACE | . | | | | . | SPACE | 36 |
| 37 | SPACE | . | | | | . | SPACE | 38 |
| 39 | SPACE | . | | | | . | SPACE | 40 |
| 41 | SPACE | . | | | | . | SPACE | 42 |
| | EST TOTAL VA PER PHASE | | 6200 | 5200 | 4500 | | | |
| | EST TOTAL PANELBOARD VA | | | | 15,900 | | | |

| PANEL: LP–C (BLOWER BLDG) | FEEDER ENTRANCE: FEEDER | MOUNTING: WALL MOUNTNG |
|---|---|---|
| SERVICE: 120/208V, 3ø, 4W | SERVICE ENTRANCE LABEL: LABEL | |
| MAIN DEVICE: . | | |

| CKT NO. | CIRCUIT IDENTIFICATION | CB AMPS | VA PER PHASE A | VA PER PHASE B | VA PER PHASE C | CB AMPS | CIRCUIT IDENTIFICATION | CKT NO. |
|---|---|---|---|---|---|---|---|---|
| 1 | LIGHTS | 20/1 | 500 | | | 20/1 | OUTLETS | 2 |
| 3 | LIGHTS | 20/1 | | 500 | | 20/1 | OUTLETS | 4 |
| 5 | CO–GEN RELAYS | 20/1 | | | 200 | 20/1 | OUTLETS | 6 |
| 7 | GEN BATTERY CHARGER | 20/1 | 300 | | 500 | 20/1 | DIESEL DAY TANK | 8 |
| 9 | EXHAUST FAN | 20/1 | | 500 | | 20/1 | RTU–3 | 10 |
| 11 | SPARE | 20/1 | | | 200 | 20/1 | RTU–3 | 12 |
| 13 | SPARE | 20/1 | | | | 20/1 | SPARE | 14 |
| 15 | SPARE | 20/1 | | | | 20/1 | SPARE | 16 |
| 17 | SPARE | 20/1 | | | | 20/1 | SPARE | 18 |
| 19 | SPARE | 20/1 | | | | 20/1 | SPARE | 20 |
| 21 | SPARE | 30/1 | | | | 20/1 | SPARE | 22 |
| 23 | SPARE | 20/1 | | | | 20/1 | SPARE | 24 |
| 25 | SPARE | 20/1 | | | | 20/1 | SPARE | 26 |
| 27 | SPACE | . | | | | . | SPACE | 28 |
| 29 | SPACE | . | | | | . | SPACE | 30 |
| 31 | SPACE | . | | | | . | SPACE | 32 |
| 33 | SPACE | . | | | | . | SPACE | 34 |
| 35 | SPACE | . | | | | . | SPACE | 36 |
| 37 | SPACE | . | | | | . | SPACE | 38 |
| 39 | SPACE | . | | | | . | SPACE | 40 |
| 41 | SPACE | . | | | | . | SPACE | 42 |
| | EST TOTAL VA PER PHASE | | 1800 | 1700 | 900 | | | |
| | EST TOTAL PANELBOARD VA | | | | 4,400 | | | |

FILE: 215786–00E030.dwg
DATE: Oct 06, 2015–7:23:56pm, rsnider

HDR Engineering, Inc.

| ISSUE | DATE | DESCRIPTION |
|---|---|---|
| A | JUNE 2015 | ISSUED FOR BID |

| | |
|---|---|
| PROJECT MANAGER | C. OLSON |
| | |
| DESIGNED | W.F. ETTLICH |
| DESIGNED | |
| CHECKED | L.D. SMITHEY |
| DRAWN | E.G. SESPENE |
| DATE | JUNE 30, 2015 |
| | |
| PROJECT NUMBER | 215786 |

REGISTERED PROFESSIONAL ENGINEER
WILLIAM F. ETTLICH
NO. 07625
EXP. 09/30/16
ELECTRICAL
STATE OF CALIFORNIA
06-30-15

CITY OF PINOLE CALIFORNIA 1903

PINOLE/HERCULES
WATER POLLUTION
CONTROL PLANT UPGRADE
CLIENT PN

**ELECTRICAL**

**SCHEDULES**

0 1" 2"

| FILENAME | 215786–00E030 |
|---|---|
| SCALE | AS NOTED |

SHEET **00E030**

| PANEL: LP–BA, NEMA 3R | | | FEEDER ENTRANCE: FEEDER | | | | MOUNTING: PEDESTAL OUTDOORS | | |
|---|---|---|---|---|---|---|---|---|---|
| SERVICE: 120/208V, 3ø, 4W | | | | | | | SERVICE ENTRANCE LABEL: YES | | |
| MAIN DEVICE: 50A CIRCUIT BREAKER | | | | | | | | | |
| CKT NO. | CIRCUIT IDENTIFICATION | CB AMPS | VA PER PHASE | | | CB AMPS | CIRCUIT IDENTIFICATION | CKT NO. |
| | | | A | B | C | | | |
| 1 | CHLORINE CONTACT CNTL BLDG | 20/1 | 300 / 500 | | | 20/1 | SAMPLE PUMP 71PMP013 | 2 |
| 3 | CHLORINE CONTACT CNTL BLDG | 20/1 | | 300 / 500 | | 20/1 | SAMPLE PUMP 71PMP014 | 4 |
| 5 | RTU–9 | 20/1 | | | 200 / 200 | 20/1 | 72STR003, 72FIT007 | 6 |
| 7 | SAMPLE PUMP, 71PMP017 | 20/1 | 500 / 500 | | | 30/1 | SAMPLE PUMP, 71PMP015 | 8 |
| 9 | SAMPLE PUMP, 71PMP018 | 20/1 | | 500 / 500 | | 20/1 | SAMPLE PUMP, 71PMP016 | 10 |
| 11 | TANK HEATER (GFI) | 20/1 | | | 500 / 200 | 20/1 | SAMPLER, 71CS019 | 12 |
| 13 | SPARE | 20/1 | . / . | | | 20/1 | SPARE | 14 |
| 15 | SPARE | 20/1 | | . / . | | 20/1 | SPARE | 16 |
| 17 | SPARE | 20/1 | | | . / . | 20/1 | SPARE | 18 |
| 19 | SPACE | . | . / . | | | . | SPACE | 20 |
| 21 | SPACE | . | | . / . | | . | SPACE | 22 |
| 23 | SPACE | . | | | . / . | . | SPACE | 24 |
| | EST TOTAL VA PER PHASE | | 1800 | 1800 | 1100 | | | |
| | EST TOTAL PANELBOARD VA | | | | 4,700 | | | |

| PANEL: LP–PW | | | FEEDER ENTRANCE: BOTTOM | | | | MOUNTING: SURFACE | | |
|---|---|---|---|---|---|---|---|---|---|
| SERVICE: 120/208V, 3ø, 4W | | | | | | | SERVICE ENTRANCE LABEL: YES | | |
| MAIN DEVICE: 50A CIRCUIT BREAKER | | | | | | | | | |
| CKT NO. | CIRCUIT IDENTIFICATION | CB AMPS | VA PER PHASE | | | CB AMPS | CIRCUIT IDENTIFICATION | CKT NO. |
| | | | A | B | C | | | |
| 1 | LIGHTS | 20/1 | 1000 / 500 | | | 20/1 | OULETS | 2 |
| 3 | SPARE | 20/1 | | . / 500 | | 20/1 | OUTLETS | 4 |
| 5 | SPARE | 20/1 | | | . / 500 | 20/1 | VENTILATION | 6 |
| 7 | SPARE | 20/1 | . / . | | | 30/1 | SPARE | 8 |
| 9 | SPACE | . | | . / . | | 20/1 | SPARE | 10 |
| 11 | SPACE | . | | | . / . | 20/1 | SPARE | 12 |
| 13 | SPACE | . | . / . | | | 20/1 | SPARE | 14 |
| 15 | SPACE | . | | . / . | | 20/1 | SPARE | 16 |
| 17 | SPACE | . | | | . / . | 20/1 | SPARE | 18 |
| 19 | SPACE | . | . / . | | | . | SPACE | 20 |
| 21 | SPACE | . | | . / . | | . | SPACE | 22 |
| 23 | SPACE | . | | | . / . | . | SPACE | 24 |
| | EST TOTAL VA PER PHASE | | 1500 | 500 | 500 | | | |
| | EST TOTAL PANELBOARD VA | | | | 2,500 | | | |

## LIGHTING FIXTURE SCHEDULE

| TYPE | MANUFACTURER AND # OR APPROVED EQUAL | MOUNTING | USE |
|---|---|---|---|
| A | 2 EACH – PHILIPS GPLM–180W 98LED4K–LE4–480–002–NPW/RSAR–1A–NP | 30' DUAL MAST ARM, SQUARE TAPERED STEEL POLE, GALVANIZED OR ALUMINUM POWDER COAT FINISH | SITE LIGHT |
| B | LITHONIA DSX0LED 70030K T5W120SPADDBXD | 10' SQUARE STRAIGHT STEEL POLE, BRONZE FINISH | POST LIGHT |
| C | LITHONIA 2 ALLS448EZB LP835 N80 | SURFACE | SURFACE MOUNT |
| D | LITHONIA TWHLED 20C1000 50KT3M MVOLT DDBXD | WALL BRACKET | WALL WASHER |
| E | LITHONIA EU2LEDM12 | WALL MOUNT | EMERGENCY LIGHT |
| F | LITHONIA FEM4LED4L/57 IMAFL 120 | PENDANT OR SURFACE | WET AREA LIGHT |
| | | | |
| | | | |

## PULLBOX SCHEDULE
### PULLBOXES, DEPTH MINIMUM 30"

| TAG | POWER (L"xW") | CONTROLS (L"XW") |
|---|---|---|
| 1 | 12x24 | 12x24 |
| 2 | 18x30 | 12x24 |
| 3 | 24x30 | 24x30 |
| 4 | 24x30 | 24x30 |
| 5 | 24x30 | 12x24 |
| 6 | 24x30 | 24x30 |
| 7 | 24x30 | 24x30 |
| 8 | 18x30 | 18x30 |
| 9 | 24x30 | 12x24 |
| 10 | 12x24 | 12x24 |
| 11 | 12x24 | 12x24 |
| 12 | 24x30 | 24x30 |
| 13 | 24x30 | 24x30 |
| 14 | 18x30 | 18x24 |
| 15 | 18x30 | 18x24 |

SIZES SHOWN ARE MINIMUM, CONTRACTOR MAY INCREASE SIZE.

FILE: 215786–00E031.dwg
DATE: Oct 06, 2015–7:24:02pm, rsnider

HDR Engineering, Inc.

| ISSUE | DATE | DESCRIPTION |
|---|---|---|
| | | |
| | | |
| | | |
| | | |
| | | |
| | | |
| A | JUNE 2015 | ISSUED FOR BID |

| | |
|---|---|
| PROJECT MANAGER | C. OLSON |
| | |
| DESIGNED | W.F. ETTLICH |
| DESIGNED | |
| CHECKED | L.D. SMITHEY |
| DRAWN | E.G. SESPENE |
| DATE | JUNE 30, 2015 |
| | |
| PROJECT NUMBER | 215786 |

REGISTERED PROFESSIONAL ENGINEER
WILLIAM F. ETTLICH
NO. 07625
EXP. 09/30/16
ELECTRICAL
STATE OF CALIFORNIA
06-30-15

CITY OF PINOLE CALIFORNIA 1903

PINOLE/HERCULES
WATER POLLUTION
CONTROL PLANT UPGRADE
CLIENT PN

**ELECTRICAL**

**SCHEDULES**

0 1" 2"

| | |
|---|---|
| FILENAME | 215786–00E031 |
| SCALE | NONE |

SHEET **00E031**

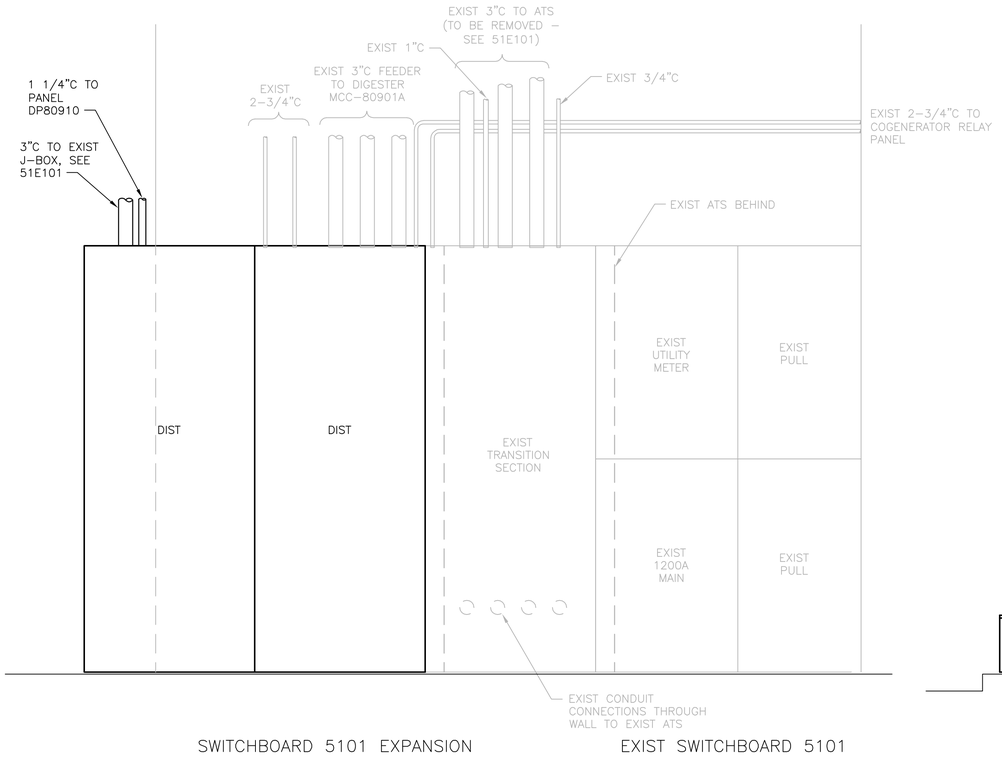


## SWBD 5101 LAYOUT

SCALE: 3/4" = 1'-0"

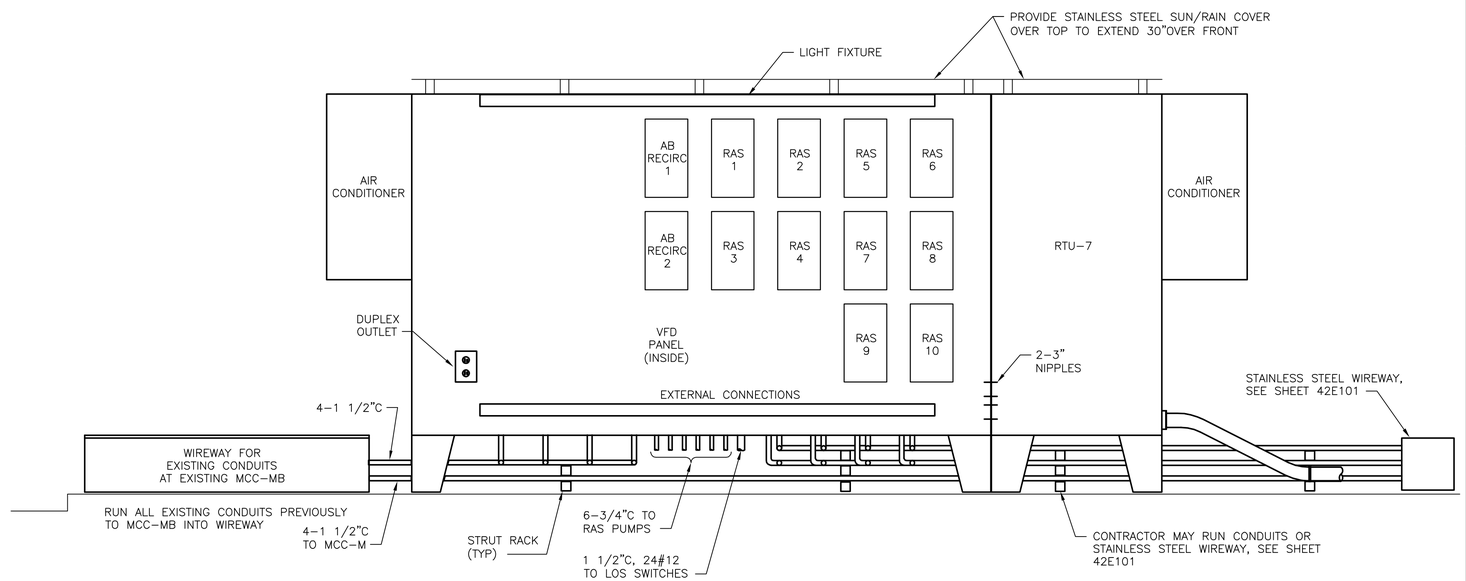


## SECONDARY AREA VFD PANEL LAYOUT

SCALE: 3/4" = 1'-0"

FILE: 215786-00E033.dwg
DATE: Oct 06, 2015-7:24:07pm, rsnider

HDR Engineering, Inc.

| ISSUE | DATE | DESCRIPTION |
|---|---|---|
| A | JUNE 2015 | ISSUED FOR BID |

| | |
|---|---|
| PROJECT MANAGER | C. OLSON |
| DESIGNED | W.F. ETTLICH |
| DESIGNED | |
| CHECKED | L.D. SMITHEY |
| DRAWN | E.G. SESPENE |
| DATE | JUNE 30, 2015 |
| PROJECT NUMBER | 215786 |

REGISTERED PROFESSIONAL ENGINEER
WILLIAM F. ETTLICH
NO. 07625
EXP. 09/30/16
ELECTRICAL
STATE OF CALIFORNIA
06-30-15

CITY OF PINOLE CALIFORNIA 1903

PINOLE/HERCULES
WATER POLLUTION
CONTROL PLANT UPGRADE
CLIENT PN

**ELECTRICAL**

**EQUIPMENT LAYOUT/DETAILS**

0 1" 2"

| | |
|---|---|
| FILENAME | 215786-00E033 |
| SCALE | AS SHOWN |

SHEET **00E033**

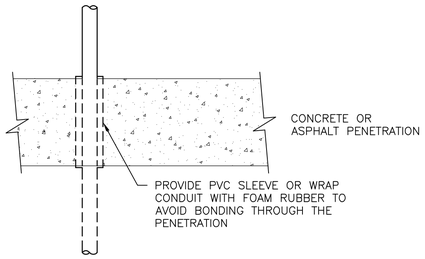


## ANTI–BONDING UNDERGROUND CONDUIT

NTS

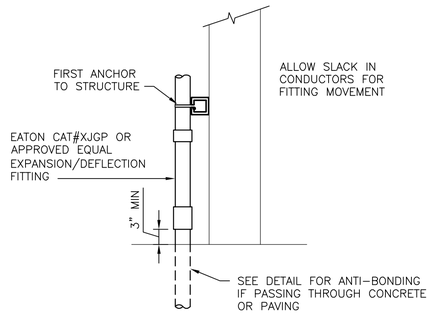


## CONDUIT DIFFERENTIAL SETTLEMENT FLEXIBILITY

NTS

REQUIRED FOR EACH CONDUIT
FROM UNDERGROUND AND
ATTACHED TO A STRUCTURE

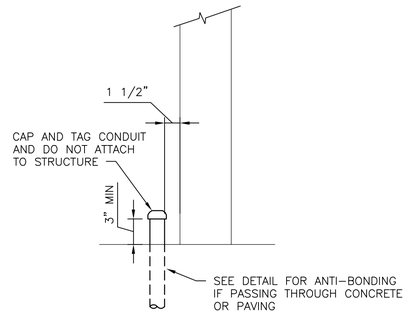


## SPARE CONDUIT STUB UP

NTS

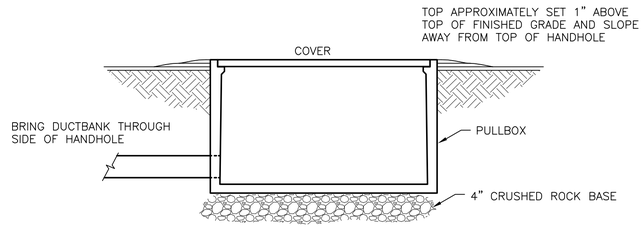


## PULLBOX INSTALLATION DETAIL

NTS

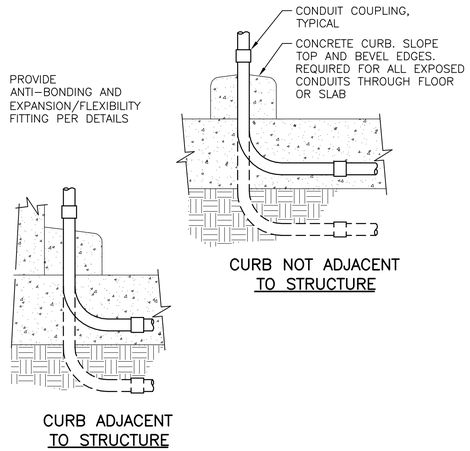


## CONDUIT CURB

NTS

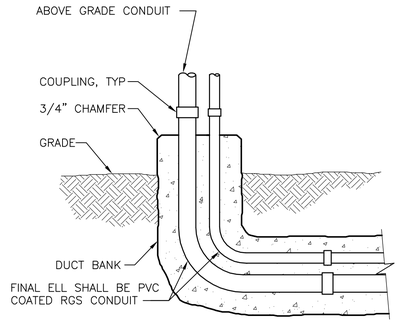


NOTE:

1. SEE DUCT BANK SECTION DETAIL FOR ADDITIONAL REQUIREMENTS.

## CONDUIT TRANSITION TO ABOVE GRADE (EXTERIOR)

NTS

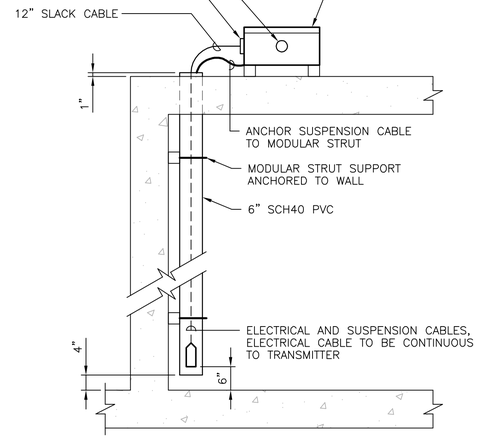


## SUBMERSIBLE LEVEL TRANSMITTER

NTS

FILE: 215786–00E034.dwg
DATE: Oct 06, 2015–7:24:12pm, rsnider

HDR Engineering, Inc.

| ISSUE | DATE | DESCRIPTION |
|---|---|---|
| A | JUNE 2015 | ISSUED FOR BID |

| | |
|---|---|
| PROJECT MANAGER | C. OLSON |
| DESIGNED | W.F. ETTLICH |
| DESIGNED | |
| CHECKED | L.D. SMITHEY |
| DRAWN | E.G. SESPENE |
| DATE | JUNE 30, 2015 |
| PROJECT NUMBER | 215786 |

REGISTERED PROFESSIONAL ENGINEER
WILLIAM F. ETTLICH
NO. 07625
EXP. 09/30/16
ELECTRICAL
STATE OF CALIFORNIA
06-30-15

CITY OF PINOLE CALIFORNIA 1903

PINOLE/HERCULES
WATER POLLUTION
CONTROL PLANT UPGRADE
CLIENT PN

**ELECTRICAL**

**DETAILS**

0 1" 2"

| | |
|---|---|
| FILENAME | 215786–00E034 |
| SCALE | AS SHOWN |

SHEET
**00E034**

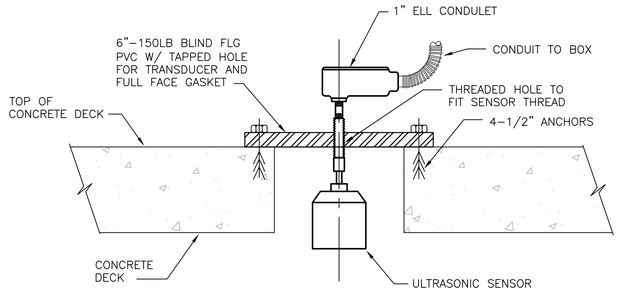


NOTES:

1. CONTRACTOR SHALL VERIFY SIZE OF PENETRATION IN THE CONCRETE TO ACCOMODATE INSTRUMENT INSTALLATION.
2. CONTRACTOR SHALL VERIFY THERE ARE NO VERTICAL OBSTRUCTIONS FOR THE SIGNAL PATH.

STRUCTURE MOUNTING

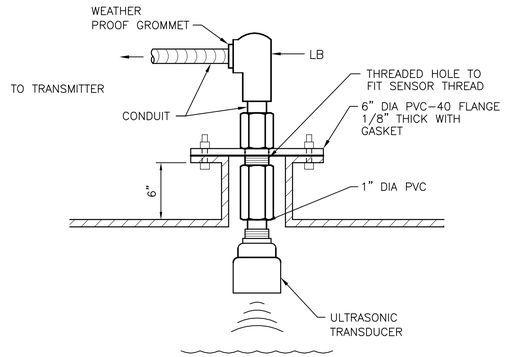


NOTES:

1. PROVIDE FLANGE FOR TRANSDUCER AND INSTALL TRANSDUCER.
2. ALLOW ADEQUATE SLACK IN FLEX CONDUIT AND MANUFACTURER SUPPLIED CABLE TO ALLOW REMOVAL OF TRANSDUCER ASSEMBLY FROM SLEEVE.

## ULTRASONIC TRANSDUCER TANK MOUNTING

NTS

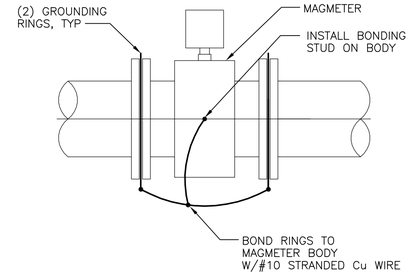


## MAGNETIC FLOW METER INSTALLATION

NTS

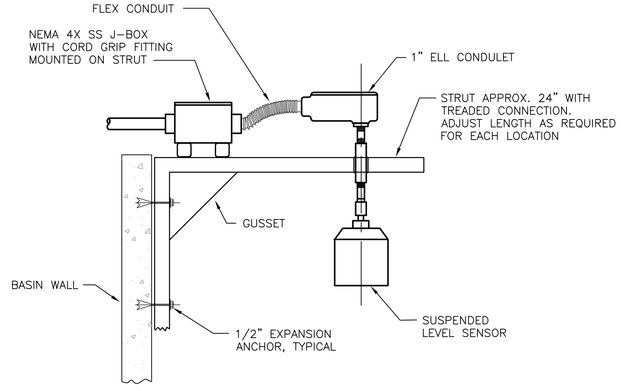


## ULTRASONIC LEVEL SENSOR INSTALLATION – WALL

NTS

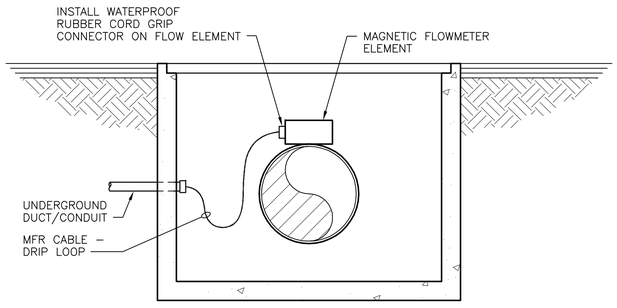


## FLOWMETER INSTALLATION IN VAULT

NTS

FOR DIRECT BURIED METER PROVIDE WATER PROOF CONNECTIONS TO THE TERMINAL BOX.

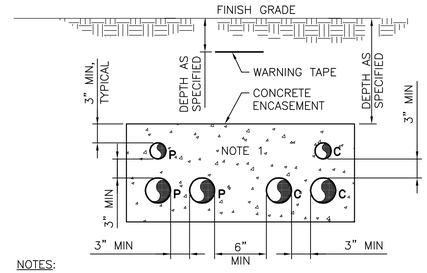


NOTES:

1. NUMBER OF CONDUITS AS REQUIRED FOR THE APPLICATION.
2. P SUBSCRIPT ELECTRICAL POWER OR CONTROL CONDUIT.
3. C SUBSCRIPT COMMUNICATION (TELEPHONE, DATA, INSTRUMENTATION) CONDUIT.

## CONCRETE ENCASED DUCT BANK SECTION

NTS

FILE: 215786–00E035.dwg
DATE: Oct 06, 2015–7:24:17pm, rsnider

HDR Engineering, Inc.

| ISSUE | DATE | DESCRIPTION |
|---|---|---|
| A | JUNE 2015 | ISSUED FOR BID |

| | |
|---|---|
| PROJECT MANAGER | C. OLSON |
| | |
| DESIGNED | W.F. ETTLICH |
| DESIGNED | |
| CHECKED | L.D. SMITHEY |
| DRAWN | E.G. SESPENE |
| DATE | JUNE 30, 2015 |
| | |
| PROJECT NUMBER | 215786 |

REGISTERED PROFESSIONAL ENGINEER
WILLIAM F. ETTLICH
NO. 07625
EXP. 09/30/16
ELECTRICAL
STATE OF CALIFORNIA
06-30-15

CITY OF PINOLE CALIFORNIA 1903

PINOLE/HERCULES
WATER POLLUTION
CONTROL PLANT UPGRADE
CLIENT PN

**ELECTRICAL**

**DETAILS**

0 1" 2"

| | |
|---|---|
| FILENAME | 215786–00E035 |
| SCALE | AS SHOWN |

SHEET **00E035**

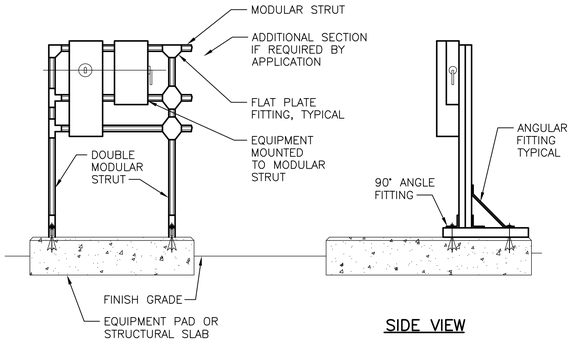


FRONT VIEW

SIDE VIEW

NOTES:

1. COMBINED EQUIPMENT LOADS PER 36" SPAN SHALL NOT EXCEED 500 LBS.
2. PROVIDE GROUNDING FOR OUTDOOR INSTALLATIONS. HOT DIPPED GALVANIZED AFTER FABRICATION.
3. ANCHORS: STAINLESS STEEL, 1/2" DIAMETER, 3 1/2" EMBEDMENT.
4. PROTECT SURFACES WITH DISSIMILAR MATERTIALS IN ACCORDANCE WITH SPECIFICATION 09905.

## MODULAR EQUIPMENT RACK
NTS

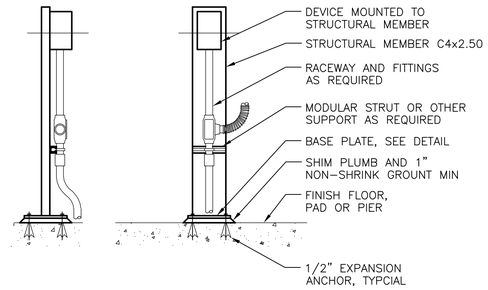


SIDE VIEW FRONT VIEW

## SINGLE DEVICE PEDESTAL
NTS

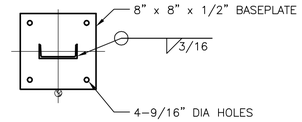


BASE PLATE PLAN VIEW

NOTES:

1. EQUIPMENT LOAD SHALL NOT EXCEED 50 LBS.
2. PEDESTAL ASSEMBLY MATERIAL TYPE: ALUMINUM.
3. ANCHORS: STAINLESS STEEL, 1/2" DIAMETER, 3 1/2" EMBEDMENT.
4. ATTACH MODULAR STRUT TO STRUCTURAL MEMBER WITH A MINIMUM OF TWO 3/8" DIAMTER STAINLESS STEEL ROUND HEAD MACHINE SCREWS WITH LOCK WASHER AND NUT.
5. PROTECT SURFACES WITH DISSIMILAR MATERIALS IN ACCORDANCE WITH SPECIFICATION 09905.

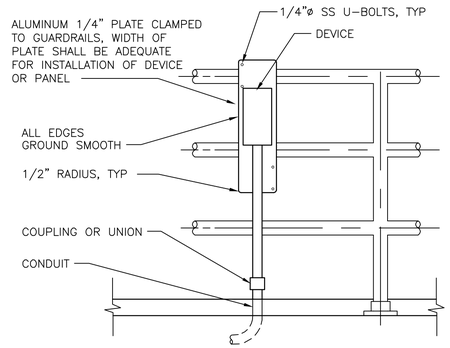


NOTE:
GUARDRAIL SHOWN DIAGRAMMATICALLY.

## GUARDRAIL MOUNTED DEVICE
NTS

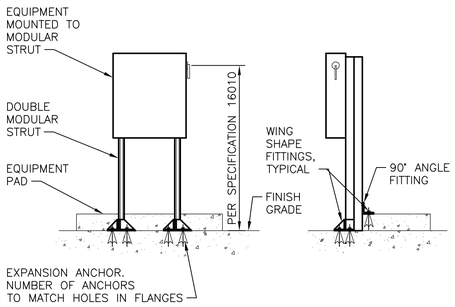


FRONT VIEW SIDE VIEW

NOTES:

1. EQUIPMENT LOAD SHALL NOT EXCEED 200 LBS.
2. HOT DIPPED GALVANIZED AFTER FABRICATION.
3. ANCHORS: STAINLESS STEEL, 3/8" DIAMETER, 3 1/2" EMBEDMENT.
4. PROTECT SURFACES WITH DISSIMILAR MATERIALS IN ACCORDANCE WITH SPECIFICATION 09905.

## MODULAR SUPPORT STRUCTURE RACK
NTS

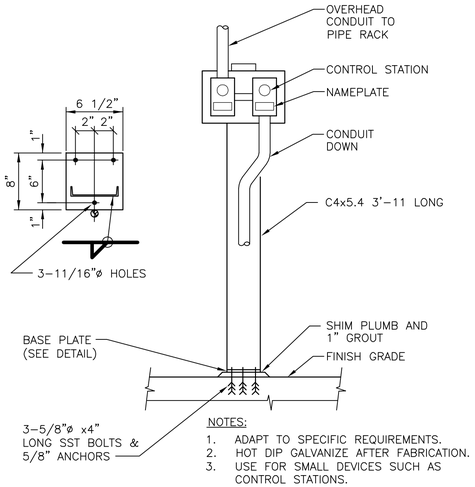


NOTES:

1. ADAPT TO SPECIFIC REQUIREMENTS.
2. HOT DIP GALVANIZE AFTER FABRICATION.
3. USE FOR SMALL DEVICES SUCH AS CONTROL STATIONS.

## PEDESTAL MOUNTED CONTROL STATION
NTS

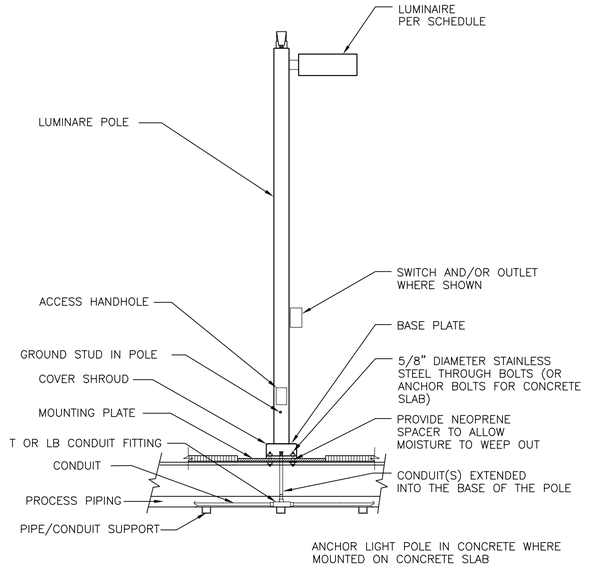


ANCHOR LIGHT POLE IN CONCRETE WHERE MOUNTED ON CONCRETE SLAB

## PLATE OR CONCRETE MOUNTED LIGHT POLE BASE
NTS

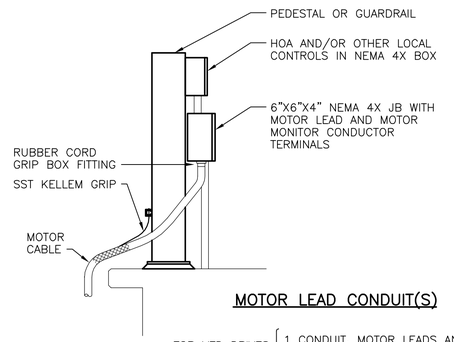


MOTOR LEAD CONDUIT(S)

FOR VFD DRIVES { 1 CONDUIT, MOTOR LEADS AND GROUIND; 1 CONDUIT TSP PLUS CONTROL

NON VFD DRIVES – 1 CONDUIT WITH MOTOR LEADS, GROUND, TSP AND CONTROL LEADS

## SUBMERSIBLE PUMP/MIXER CONNECTION DETAIL
NTS
TYPICAL FOR ALL SUBMERSIBLE DRIVES

FILE: 215786-00E036.dwg
DATE: Oct 06, 2015-7:24:22pm rsnider

HDR Engineering, Inc.

| ISSUE | DATE | DESCRIPTION |
|---|---|---|
| A | JUNE 2015 | ISSUED FOR BID |

| | |
|---|---|
| PROJECT MANAGER | C. OLSON |
| DESIGNED | W.F. ETTLICH |
| DESIGNED | |
| CHECKED | L.D. SMITHEY |
| DRAWN | E.G. SESPENE |
| DATE | JUNE 30, 2015 |
| PROJECT NUMBER | 215786 |

REGISTERED PROFESSIONAL ENGINEER WILLIAM F. ETTLICH NO. 07625 EXP. 09/30/16 ELECTRICAL STATE OF CALIFORNIA 06-30-15

CITY OF PINOLE CALIFORNIA 1903

PINOLE/HERCULES WATER POLLUTION CONTROL PLANT UPGRADE CLIENT PN

**ELECTRICAL**

**DETAILS**

0 1" 2"

| | |
|---|---|
| FILENAME | 215786-00E036 |
| SCALE | AS SHOWN |

SHEET **00E036**

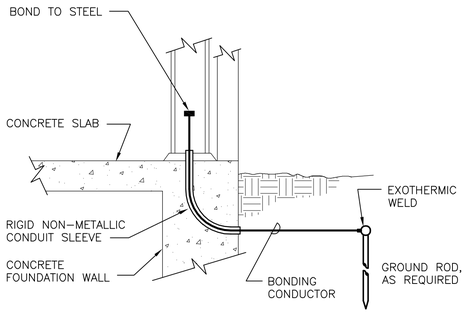


NOTE: ALL CANOPY COLUMNS AND OUTDOOR PANELS ARE TO BE GROUNDED PER THIS DETAIL.

## COLUMN GROUND CONNECTION
NTS

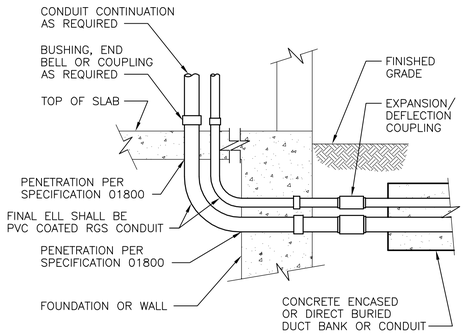


NOTE:
1. SEE DUCT BANK DETAIL FOR ADDITIONAL REQUIREMENTS.

## CONDUIT TRANSITION TO ABOVE GRADE (EXTERIOR TO INTERIOR)
NTS

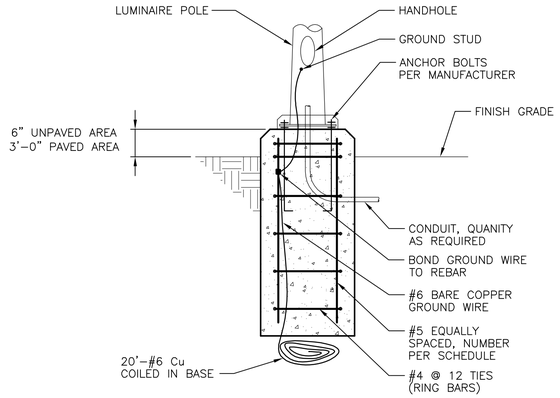


| DIMENSION SCHEDULE | | | |
|---|---|---|---|
| POLE HEIGHT | MINIMUM D | MINIMUM H | VERTICAL REBAR EACH |
| UP TO 10' | 2'-0" | 4'-6" | 6 |
| 11' TO 20' | 2'-0" | 6'-6" | 6 |
| 21' TO 30' | 2'-0" | 8'-6" | 6 |

## LIGHT POLE FOUNDATION
NTS

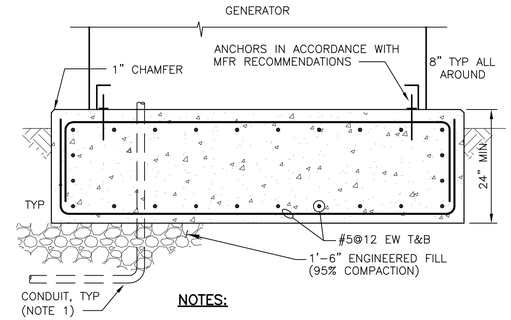


**NOTES:**

1. PRIOR TO CONDUIT STUB UPS, REVIEW GENERATOR SUBMITTAL FOR ACTUAL LOCATIONS OF ALL ELECTRICAL CONNECTIONS.

## GENERATOR PAD
NTS

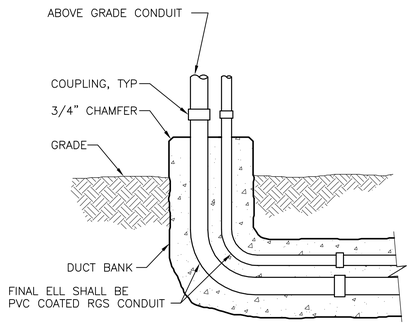


NOTE:
1. SEE DUCT BANK SECTION DETAIL FOR ADDITIONAL REQUIREMENTS.

## CONDUIT TRANSITION TO ABOVE GRADE (EXTERIOR)
NTS

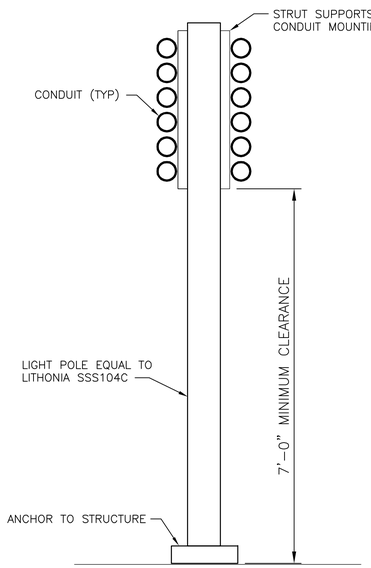


CONTRACTOR TO LAYOUT THE OVERHEAD CONDUIT SUPPORT AND MAY APPLY VARIATIONS TO ACCOMPLISH THE SAME END RESULT

## OVERHEAD CONDUIT SUPPORT
NTS

FILE: 215786-00E037.dwg
DATE: Oct 06, 2015-7:24:28pm, rander

HDR Engineering, Inc.

| ISSUE | DATE | DESCRIPTION |
|---|---|---|
| A | JUNE 2015 | ISSUED FOR BID |

| | |
|---|---|
| PROJECT MANAGER | C. OLSON |
| DESIGNED | W.F. ETTLICH |
| DESIGNED | |
| CHECKED | L.D. SMITHEY |
| DRAWN | E.G. SESPENE |
| DATE | JUNE 30, 2015 |
| PROJECT NUMBER | 215786 |

REGISTERED PROFESSIONAL ENGINEER
WILLIAM F. ETTLICH
NO. 07625
EXP. 09/30/16
ELECTRICAL
STATE OF CALIFORNIA
06-30-15

CITY OF PINOLE CALIFORNIA 1903

PINOLE/HERCULES
WATER POLLUTION
CONTROL PLANT UPGRADE
CLIENT PN

**ELECTRICAL**

**DETAILS**

0 1" 2"

| FILENAME | 215786-00E037 |
|---|---|
| SCALE | AS SHOWN |

SHEET
**00E037**

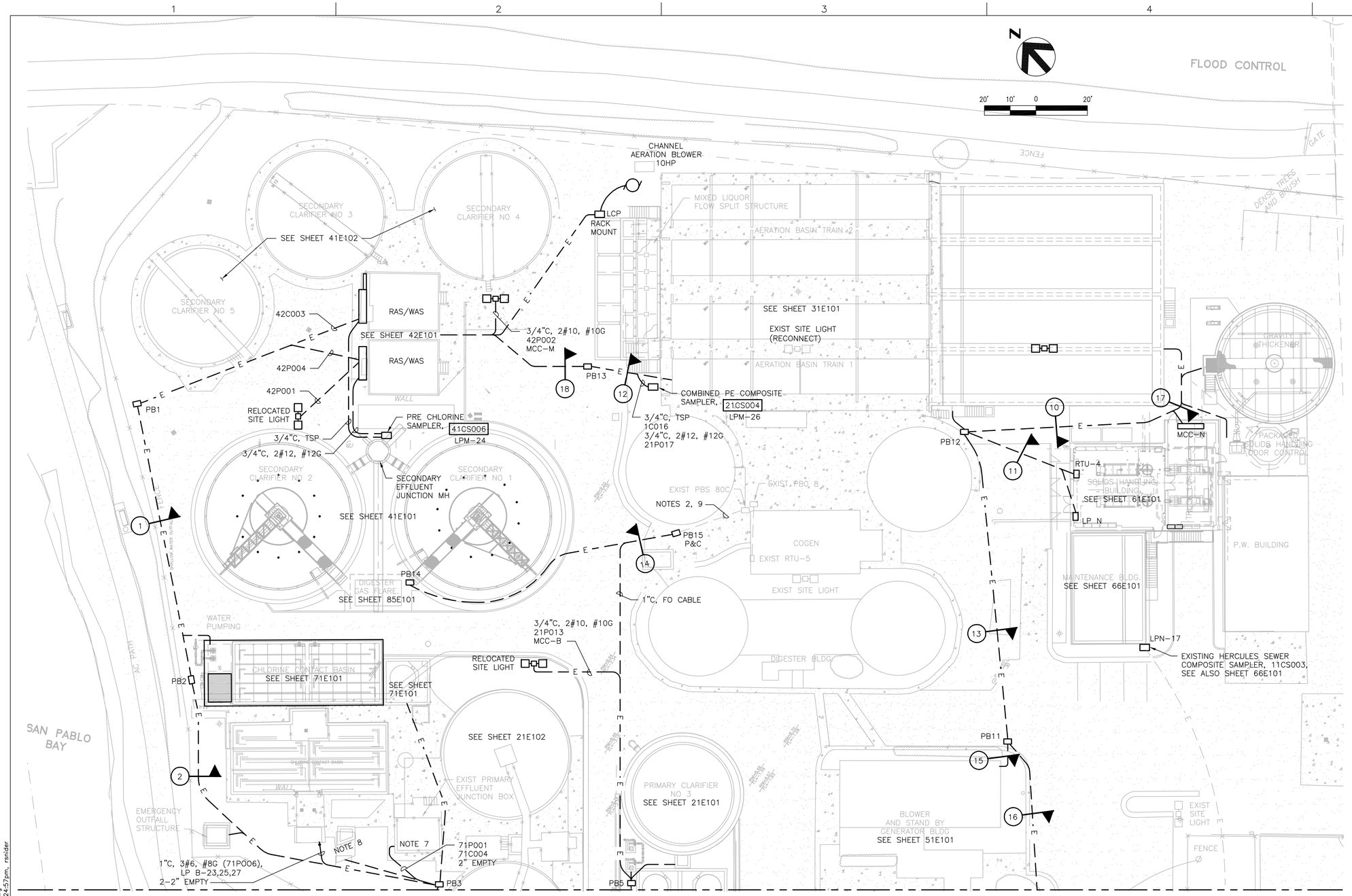


MATCHLINE AA – FOR CONTINUATION SEE DWG 00E104

NOTES:

1. ALL STRUCTURES ARE CONSTRUCTED ON PILES AND DUCT BANKS MUST BE ROUTED BETWEEN PILES FOR CONNECTION TO STRUCTURE EQUIPMENT.
2. BREAK INTO EXISTING DUCTBANK, INSTALL PULL BOX AND EXTEND AS SHOWN. PULL CONDUCTORS AS SHOWN TO TERMINATION IN COGEN BUILDING AND TERMINATE.
3. ALL PULL BOXES TO BE 18"x24"x24" DEEP UNLESS OTHERWISE SHOWN. DIVIDE EMPTY CONDUITS EVENLY BETWEEN POWER AND CONTROL PULL BOXES. WHERE "P&C" IS SHOWN FOR A PULL BOX PROVIDE 2 PULL BOXES ONE FOR POWER AND ONE FOR CONTROL.
4. SEE SHEET 00E105 FOR UNDERGROUND DUCT BANK SCHEDULE.
5. ALL SITE LIGHTS FIXTURE TYPE 1, SEE SHEET 00E031 FOR SCHEDULE.
6. EXISTING SITE LIGHTS MAY BE RE USED.
7. RACK MOUNT CHLORINE INDUCTOR LCP AND CONNECT CHLORINE INDUCTOR TO LCP.
8. EXISTING SITE LIGHTS ARE TYPE A AND NEW SITE LIGHTS ARE TO MATCH PER LIGHTING FIXTURE SCHEDULE ON SHEET 00E031.
9. RUN FO CABLE IN EXISTING DUCT AND CONDUITS TO RTU-5 AND CONNECT

FILE: 215786-00E103.dwg
DATE: Oct 06, 2015-7:24:57pm, rsnider

HDR Engineering, Inc.

| ISSUE | DATE | DESCRIPTION |
|---|---|---|
| A | JUNE 2015 | ISSUED FOR BID |

| | |
|---|---|
| PROJECT MANAGER | C. OLSON |
| DESIGNED | W.F. ETTLICH |
| DESIGNED | |
| CHECKED | L.D. SMITHEY |
| DRAWN | E.G. SESPENE |
| DATE | JUNE 30, 2015 |
| PROJECT NUMBER | 215786 |

REGISTERED PROFESSIONAL ENGINEER WILLIAM F. ETTLICH NO. 07625 EXP. 09/30/16 ELECTRICAL STATE OF CALIFORNIA

CITY OF PINOLE CALIFORNIA 1903

PINOLE/HERCULES WATER POLLUTION CONTROL PLANT UPGRADE CLIENT PN

**ELECTRICAL**

**SITE PLAN NORTH PLANT**

0 1" 2"

| | |
|---|---|
| FILENAME | 215786-00E103 |
| SCALE | AS NOTED |

SHEET **00E103**

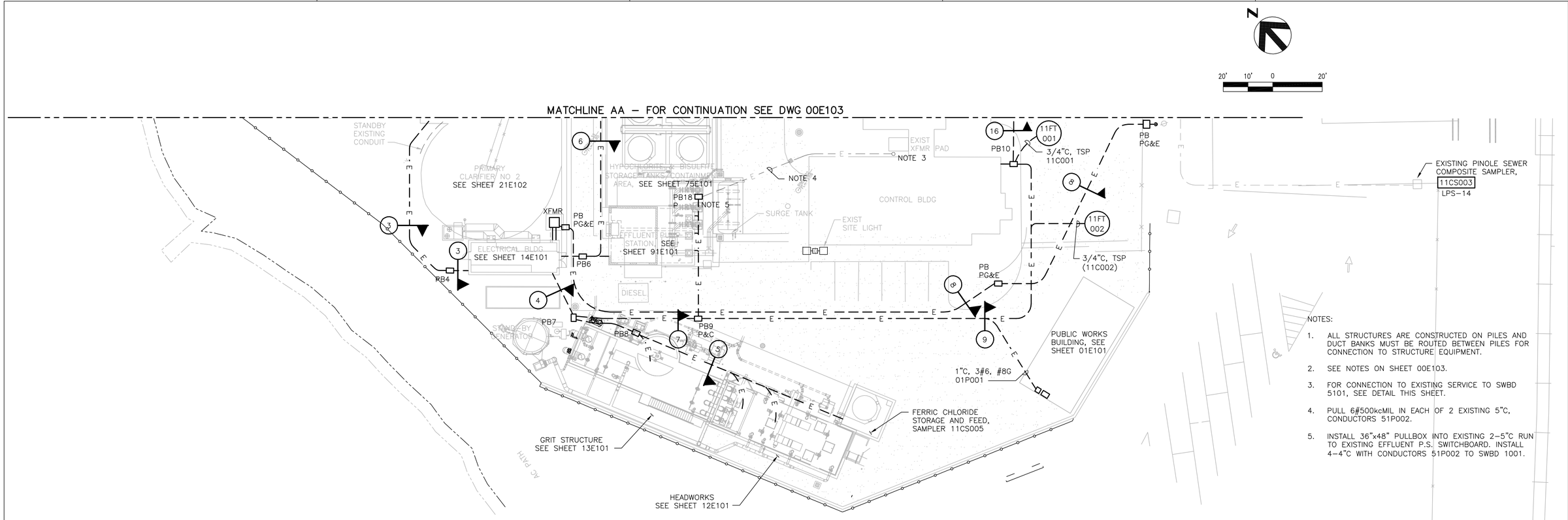


NOTES:

1. ALL STRUCTURES ARE CONSTRUCTED ON PILES AND DUCT BANKS MUST BE ROUTED BETWEEN PILES FOR CONNECTION TO STRUCTURE EQUIPMENT.
2. SEE NOTES ON SHEET 00E103.
3. FOR CONNECTION TO EXISTING SERVICE TO SWBD 5101, SEE DETAIL THIS SHEET.
4. PULL 6#500kcMIL IN EACH OF 2 EXISTING 5"C, CONDUCTORS 51P002.
5. INSTALL 36"x48" PULLBOX INTO EXISTING 2–5"C RUN TO EXISTING EFFLUENT P.S. SWITCHBOARD. INSTALL 4–4"C WITH CONDUCTORS 51P002 TO SWBD 1001.

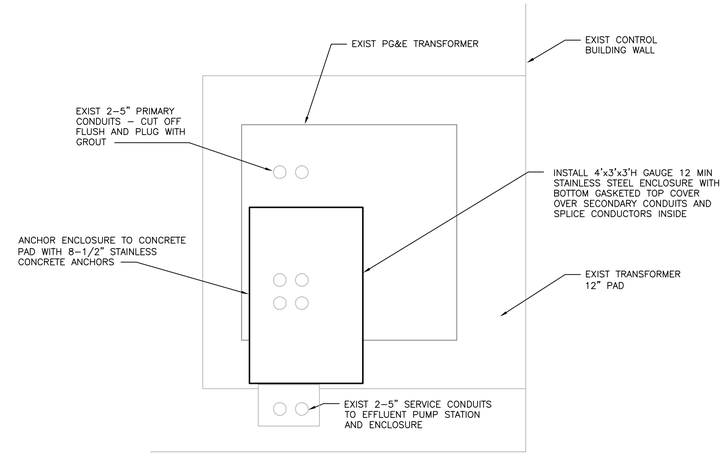


## EXISTING TRANSFORMER PAD DETAIL

SCALE: 1/2" = 1'–0"

FILE: 215786–00E104.dwg
DATE: Oct 06, 2015–7:25:10pm, rsnider

HDR Engineering, Inc.

| ISSUE | DATE | DESCRIPTION |
|---|---|---|
| A | JUNE 2015 | ISSUED FOR BID |

| | |
|---|---|
| PROJECT MANAGER | C. OLSON |
| DESIGNED | W.F. ETTLICH |
| DESIGNED | |
| CHECKED | L.D. SMITHEY |
| DRAWN | E.G. SESPENE |
| DATE | JUNE 30, 2015 |
| PROJECT NUMBER | 215786 |

REGISTERED PROFESSIONAL ENGINEER WILLIAM F. ETTLICH NO. 07625 EXP. 09/30/16 ELECTRICAL STATE OF CALIFORNIA 06-30-15

CITY OF PINOLE CALIFORNIA 1903

PINOLE/HERCULES
WATER POLLUTION
CONTROL PLANT UPGRADE
CLIENT PN

**ELECTRICAL**

**SITE PLAN SOUTH PLANT**

0 1" 2"

| | |
|---|---|
| FILENAME | 215786–00E104 |
| SCALE | AS NOTED |

SHEET **00E104**

## DUCTBANK SCHEDULE

| SECTION | DUCT SIZE, IN | CONDUCTOR FILL |
|---|---|---|
| 1 | 1 | 42C003 |
| | 3 | 42P004 |
| | 3–2" | EMPTY (1–RTU–7, 2–MCC–M) |
| | | |
| | | |
| 2 | 2 | 42C003, 72C004 |
| | 3 | 42P004 |
| | 1 1/2 | 72P001, 72P002 |
| | | |
| | 3/4 | 72P003 |
| | 4–2" | EMPTY |
| | | |
| | | |
| 3 | 3 | 42C003, 72C004, 71C002, 71C004, 71C006, 71C007, 77C003, 21C004 |
| | 3 | 42P004 |
| | 1 | 72P002 |
| | | |
| | | |
| | 3/4 | 71P001 |
| | | |
| | | |
| | 1 | 71P006 |
| | 3/4 | 77P001 |
| | 3/4 | 77P002 |
| | | |
| | | |
| | 3/4 | 21P001 |
| | 1 1/2 | 21P002, 21P003 |
| | | |
| | | |
| | 3/4 | 21P005 |
| | 1 | 21P006 |
| | 1 1/2 | 21P007, 21P008 |
| | | |
| | | |
| | 8–2" | EMPTY |
| | | |
| | | |
| 4 | 1 1/2 | 76C001 |
| | 3/4 | 76P002 |
| | 2 | 11C003 |
| | 3/4 | 12P001 |
| | 1 | 01P001 |
| | 3/4 | 12P004 |
| | 1 | 12P005 |
| | | |
| | | |
| | 3/4 | 12P008 |
| | 2 | 12C009, 12C007, 12C006, 12C002, 12C003 |
| | 1 1/4 | 12P010 |
| | 1 1/4 | 12P011 |
| | 1 1/4 | 12P012 |
| | 1 1/4 | 12P013 |
| | 1 1/2 | 12C014 |
| | 1 1/2 | 12C015 |

## DUCTBANK SCHEDULE (continue)

| SECTION | DUCT SIZE, IN | CONDUCTOR FILL |
|---|---|---|
| | 3/4 | 12P016 |
| | 3/4 | 13P001 |
| | 2 | 13C002 |
| | 1 1/2 | 13P003, 13P004, 13C007, 13C010, 91C010 |
| | | |
| | 3/4 | 13P005 |
| | 3/4 | 13P006 |
| | | |
| | 1 | 13P008 |
| | 1 | 13P009 |
| | 3/4 | 91P009 |
| | 6–2" | EMPTY (STUB UP AT HEADWORKS) |
| | | |
| | | |
| 5 | 1 1/2 | 76C001 |
| | 3/4 | 76P002 |
| | 1 | 12P001, 12P004 |
| | 1 | 12C002, 12C003 |
| | | |
| | | |
| | 1 | 12P005 |
| | 1 | 12C006 |
| | 3/4 | 12C007 |
| | 3/4 | 12P008 |
| | 1 1/4 | 12C009 |
| | 1 1/4 | 12P010 |
| | 1 1/4 | 12P011 |
| | 1 1/4 | 12P012 |
| | 1 1/4 | 12P013 |
| | 1 1/2 | 12C014 |
| | 1 1/2 | 12C015 |
| | 3/4 | 12P016 |
| | 2–2" | EMPTY |
| | | |
| | | |
| 6 | 1 | 21P009 |
| | 3/4 | 21P010 |
| | | |
| | 1 | 21P011, 12P012 |
| | 3/4 | 21P013 |
| | 3/4 | 21C014 |
| | 1 | 21P015 |
| | 1 | 75P005, 75P006, 75P007 |
| | 1 | FO CABLE (RTU–5) |
| | | |
| | 4–2" | EMPTY |
| | | |
| 7 | 1 | 01P001 |
| | 1 | 11C001, 11C002 |
| | 2 | 11C003 |
| | 2–3" | 91P001 |
| | 2–3" | 91P002 |
| | 2–3" | 91P003 |
| | 1 | 91C004 |

## DUCTBANK SCHEDULE (continue)

| SECTION | DUCT SIZE, IN | CONDUCTOR FILL |
|---|---|---|
| | 3–4" | 51P002 |
| | 6–2" | EMPTY (STUB UP AT EFFLUENT PUMPS) |
| | | |
| 8 | 2–5" | PG&E PRIMARY |
| | | |
| 9 | 1 | 01P001 |
| | 1 | 11C001, 11C002 |
| | 2 | 11C003 |
| | 4–2" | EMPTY |
| 10 | 3/4 | 31C002 |
| | 3/4 | 31C004 |
| | 3/4 | 31P008 |
| | 3/4 | 31P007 |
| | 2 1/2 | 31C009 |
| | 3/4 | 31P010 |
| | 3 | 61P002 |
| | 3/4 | 31C010 |
| | 3/4 | 61P011 |
| | 3/4 | 61C012 |
| | 3/4 | 61P008 |
| | 6–2" | EMPTY (3 STUB UPS AT AB, 3 TO MCC–N) |
| | | |
| 11 | 1 | 61C001 |
| | 3/4 | 31C002 |
| | 3/4 | 31C004 |
| | 3/4 | 31P010 |
| | 3/4 | 61P008 |
| | 3/4 | 61C010 |
| | 3/4 | 61P011 |
| | 3/4 | 61C012 |
| | 4–2" | EMPTY (2 STUB UPS TO RTU–4, 2 TO LP–N) |
| | | |
| 12 | 3/4 | 21C016 |
| | 3/4 | 21P017 |
| | 3/4 | 32C001 |
| | 1 | 32P002 |
| | 1 1/4 | 32C003 |
| | 1 | 32P004 |
| | 3/4 | 31P011 |
| | 3/4 | 31P012 |
| | 1 1/2 | 31P013 |
| | 1 1/2 | 31P014 |
| | 1 | 31P015 |
| | 1 1/2 | 31C016 |
| | 2 | 31C017 |
| | 1 1/4 | 31C018 |
| | 6–2" | EMPTY |
| | | |
| 13 | 3 | 31C009 |
| | 1 | 61C001 |
| | 3 | 61P002 |
| | 6–2" | EMPTY |
| | | |
| 14 | | SEE 85E101 |
| | 1 | FO CABLE TO RTU–5 |

## DUCTBANK SCHEDULES (continue)

| SECTION | DUCT SIZE, IN | CONDUCTOR FILL |
|---|---|---|
| 15 | 3 | 31C009 |
| | 1 | 51C001 |
| | 3 | 61P002 |
| | 3–2" | EMPTY (STUB UP AT BUILDING) |
| | | |
| | | |
| 16 | 2 | 61C001, 51C001 |
| | 6–2" | EMPTY |
| | | |
| | | |
| 17 | 3/4 | 31P010 |
| | | |
| | 3/4 | 61C003 |
| | 3/4 | 61P004 |
| | 3/4 | 61P005 |
| | 1 | 61P006 |
| | 1 | 61P007 |
| | 3/4 | 61P008 |
| | 1 | 61P009 |
| | 3/4 | 61C010 |
| | 3/4 | 61P011 |
| | 4–2" | EMPTY (2–MCC–N, 2–RTU–4) |
| | | |
| | | |
| 18 | 3/4 | 21C016 |
| | 3/4 | 21P017 |
| | 3/4 | 32C001 |
| | 1 | 32P002, 31P012 |
| | 1 1/4 | 32C003 |
| | 1 | 32P004, 31P011 |
| | 1 1/2 | 31P013 |
| | 1 1/2 | 31P014 |
| | 1 | 31P015 |
| | 1 1/2 | 31C016 |
| | 2 | 31C017 |
| | 1 1/4 | 31C018 |
| | 6–2" | EMPTY |
| | | |
| | | |
| | | |
| | | |
| | | |
| | | |
| | | |
| | | |
| | | |
| | | |
| | | |
| | | |
| | | |
| | | |
| | | |
| | | |

NOTES:

1. THE TAGGING SYSTEM IS SET UP TO IDENTIFY CONDUCTORS IN UNDERGROUND DUCT BANKS. OTHER CONDUCTORS DO NOT HAVE TAG NUMBERS ASSIGNED.
2. TAG ALL CONDUCTOR GROUPS IN PULL BOXES WITH THE ASSIGNED TAG NUMBERS. CONDUCTORS WITHOUT ASSIGNED NUMBERS SHALL BE TAGGED AT THE DESTINATION (MCC, RTU, ETC) WITH THE FIELD EQUIPMENT TAG ASSOCIATED WITH THE CONDUCTORS.
3. TAG NUMBER PREFIX IS THE PLANT AREA AND THE SUFFIX IS A SEQUENTIAL NUMBER: P = POWER, C = CONTROL.

FILE: 215786–00E105.dwg
DATE: Oct 06, 2015–7:25:16pm, rsnider

HDR Engineering, Inc.

| ISSUE | DATE | DESCRIPTION |
|---|---|---|
| A | JUNE 2015 | ISSUED FOR BID |

| | |
|---|---|
| PROJECT MANAGER | C. OLSON |
| DESIGNED | W.F. ETTLICH |
| DESIGNED | |
| CHECKED | L.D. SMITHEY |
| DRAWN | E.G. SESPENE |
| DATE | JUNE 30, 2015 |
| PROJECT NUMBER | 215786 |

REGISTERED PROFESSIONAL ENGINEER
WILLIAM F. ETTLICH
NO. 07625
EXP. 09/30/16
ELECTRICAL
STATE OF CALIFORNIA
06-30-15

CITY OF PINOLE CALIFORNIA 1903

PINOLE/HERCULES
WATER POLLUTION
CONTROL PLANT UPGRADE
CLIENT PN

**ELECTRICAL**

**DUCTBANK SCHEDULES**

0 1" 2"

| | |
|---|---|
| FILENAME | 215786–00E105 |
| SCALE | NONE |

SHEET **00E105**

## CONDUCTOR SCHEDULE

| CONDUCTOR TAG | CONDUCTRS | FROM | TO |
|---|---|---|---|
| 01P001 | 3#6, #8G | PW BUILDING | SWBD-1001 |
| 11C001 | TSP | 11FT-001 | RTU-2 |
| 11C002 | TSP | 11FT-002 | RTU-2 |
| 11C003 | 5-FO CABLE | RTU-2 | SCADA CENTRAL |
| | | | |
| 12P001 | 3#12, #12G | 12PPS101 | MCC B |
| 12C002 | 4#16 | 12PPS101 | RTU-2 |
| 12C003 | 4#16 | 12PPS102 | MCC B |
| 12P004 | 3#12, #12G | 12PPS102 | MCC B |
| 12P005 | 3#12, #12G, 8#12 | 12CVR003 | MCC-B |
| 12C006 | 2 TSP | 12LT004, 12LT005 | RTU-2 |
| 12C007 | 4#16 | 12WC006 | RTU-2 |
| 12P008 | 3#10, #10G | 12WC006 | MCC B |
| 12C009 | 2 TSP, 8#12 | 12LSH313, 12LT310, 12LSH311, 12LSL313 12LT312, 12LSL311 | RTU-2 |
| 12P010 | 3#3, #6G | 12PMP301 | MCC B |
| 12P011 | 3#3, #6G | 12PMP302 | MCC B |
| 12P012 | 3#3, #6G | 12PMP303 | MCC B |
| 12P013 | 3#3, #6G | 12PMP304 | MCC B |
| 12C014 | 4TSP, 16#12 | RAW SEWAGE PUMPS | MCC B |
| 12C015 | 6#12, 28#16 | GATE ACTUATOR | RTU-2 |
| 12C016 | 3#10, #10G | GATE ACTUATOR | SWBD 1001 |
| | | | |
| | | | |
| 13P001 | 3#8, #10G | 12VGR003 | MCC B |
| 13C002 | 6#16 | 12VGR003 | RTU-2 |
| 13P003 | 3#10, #10G, 2#12 | 14PMP001 | MCC B |
| 13P004 | 3#10, #10G, 2#12 | 14PMP002 | MCC B |
| 13P005 | 4#12, #12G | LIGHTS AND OUTLETS | LP B |
| 13P006 | 3#12, #12G | MOTORIZED GATES | MCC B |
| 13C007 | 14#16 | MOTORIZED GATES | RTU-2 |
| 13P008 | 4#10, 2#10G | SITE LIGHT | MCC B |
| 13P009 | 3#8, #10G | 1305001 | SWBD 1001 |
| 13C010 | 6#16 | 1305001 | RTU-2 |
| | | | |
| 14C001 | F.O. CABLE | RTU-2 | SCADA CENTRAL |
| | | | |
| 21P001 | 2#10, #10G | SITE LIGHT | MCC B |
| 21P002 | 3#12, #12G, 10#12 | 21C001 | MCC B |
| 21P003 | 3#12, #12G, 10#12 | 21C002 | MCC B |
| 21C004 | TSP | 23LT005 | RTU-2 |
| 21P005 | 3#10, #10G | LIGHTS AND OUTLETS | LP B |
| 21P006 | 3#10, #10G, 6#12 | 23PMP001 | MCC B |
| 21P007 | 3#8, #10G, 4#12 | 25PMP001 | MCC B |
| 21P008 | 3#8, #10G, 4#12 | 25PMP002 | MCC B |
| 21P009 | 3#12, #12G, 10#12 | 21C003 | MCC B |
| 21P010 | 3#10, #10G | 12C003 | LP B |
| 21P011 | 3#8, #10G, 2#12 | 25PMP004 | MCC B |
| 21P012 | 3#8, #10G, 2#12 | 25PMP003 | MCC B |
| 21P013 | 2#10, #10G | SITE LIGHT | MCC B |
| 21C014 | TSP | 23LT006 | RTU-2 |
| 21P015 | 3#10, #10G, 4#12, TSP | 23PMP002 | MCC B |
| 21C016 | TSP | SAMPLER, 21CS004 | RTU-7 |
| 21P017 | 2#12, #12G | SAMPLER, 21CS004 | LPM |
| | | | |

## CONDUCTOR SCHEDULE (continue)

| CONDUCTOR TAG | CONDUCTRS | FROM | TO |
|---|---|---|---|
| 31P007 | 2#10, #10G | ANALYZER OUTLETS | LP N |
| 31P008 | 3#10, #10G | DO CONTROL VALVES | MCC N |
| 31C009 | 18TSP, 12#16 | DO CONTROLS AND VALVES | RTU-3 |
| 31P010 | 4#10, 2#10G | LIGHTS | MCC N, LP N |
| 31P011 | 2#10, #10G | AB ANALYZER OUTLETS | LP M |
| 31P012 | 3#10, #10G | AB GATE ACTUATORS POWER | MCC M |
| 31P013 | 6#10, 2#10G, 2TSP, 2#16 | AB MIXERS | MCC M |
| 31P014 | 6#10, 2#10G, 2TSP, 2/16 | AB MIXERS | MCC M |
| 31P015 | 6#10, 2#10G | AB ML RECIRC PUMPS | MCC M |
| 31C016 | 8TSP | AB ANALYZERS | MCC M |
| 31C017 | 12#12, 18#16 | AB GATE ACTUATORS | RTU-7 |
| 31C018 | 2TSP, 8#12 | AB RECIRC PUMPS | MCC M |
| | | | |
| | | | |
| 32C001 | 2-MFR CABLE | AB RAS FLOW | RTU-7 |
| 32P002 | 2#12, #12G | AB RAS VALVES | MCC M |
| 32C003 | 9#12, 18#14 | AB RAS VALVES | RTU-7 |
| 32P004 | 3#10, #10G | LIGHTS | LP M |
| | | | |
| | | | |
| 42P001 | 2#10, #10G | SITE LIGHTS | MCC M |
| 42P002 | 2#10, #10G | SITE LIGHTS | MCC M |
| 42C003 | F.O. CABLE | RTU-7 | SCADA CENTRAL |
| 42P004 | 3-300kcMIL, #4G | MCC M | SWBD 1001 |
| | | | |
| | | | |
| | | | |
| 51C001 | F.O. CABLE | RTU-3 | SCADA CENTRAL |
| 51P002 | 12-500kcMIL | SWBD 1001 | SWBD 5101 |
| | | | |
| | | | |
| 61C001 | F.O. CABLE | RTU-4 | SCADA CENTRAL |
| 61P002 | 3-500kcMIL, #3G | SWBD 5101 | MCC N |
| 61C003 | 8#12 | PUMP CONTROL | MCC N |
| 61P004 | 3#12, #12G | 61PMP024 | MCC N |
| 61P005 | 3#12, #12G | 61PMP025 | MCC N |
| 61P006 | 3#12, #12G, 4#12 | 61PMP030 | MCC N |
| 61P007 | 3#12, #12G, 10#12 | 61GT022 | MCC N |
| 61P008 | 3#10, #10G | GT LIGHTS & OUTLETS | LP N |
| 61P009 | 3#8, #10G | 61OS007 | MCC N |
| 61C010 | 6#16 | 61OS007 | RTU-4 |
| 61P011 | 4#10, 2#10G | SITE LIGHTS | MCC N, LP-N |
| 61C012 | TSP | 61LT029 | RTU-4 |
| | | | |
| 71P001 | 3#10, #10G | 71CI006 | MCC B |
| 71C002 | TSP | SAMPLER, 71CS019 | RTU-2 |
| 71P003 | 4#12, #12G | PUMPS | LP-BA |
| 71C004 | 2#12, 6#16G | 71CI006 | RTU-2 |
| 71P005 | 2#12, #12G | SAMPLER, 71CS019 | LP-BA |
| 71P006 | 3#6, #8G | LPBA | LP-B |
| 71C007 | 4#16 | FLOW SWITCH | RTU-2 |
| 71C008 | 4#16 | FLOW SWITCH | RTU-2 |

## CONDUCTOR SCHEDULE (continue)

| CONDUCTOR TAG | CONDUCTRS | FROM | TO |
|---|---|---|---|
| 72P001 | 3#8, #10G, 2#12 | 72PMPI001 | MCC B |
| 72P002 | 3#8, #10G, 2#12 | 72PMP002 | MCC B |
| 72P003 | 3#10, #10G | 120 VOLT | LP-B |
| 72C004 | 3TSP, 8#16 | CONTROL | RTU-2 |
| | | | |
| | | | |
| 75P001 | 2#12, #12G | HEAT TRACE OUTLETS | LP-D |
| 75C002 | 4#16 | 75LSH107, 75LSH007 | RTU-8 |
| 75C003 | 4TSP | TANK LEVELS | RTU-8 |
| 75C004 | 2#16 | 75FSH009 | RTU-8 |
| 75P005 | 4#10, 2#10G | SITE LIGHT | MCC B, LP B |
| 75P006 | 2#12, #10G | 75T103 HEATER | LPB-13 |
| 75P007 | 2#12, #10G | 75T104 HEATER | LPB-15 |
| 75P008 | 2#10, #10G | 75LSH007, 75LSH107 | LP D |
| 75P009 | 6#12, 4#12G | TANK MOV POWER | LP D |
| 75C010 | 28#16 | TANK MOV CONTROL | RTU-8 |
| | | | |
| | | | |
| 76C001 | 8TSP, 16 #16 | FERRIC CHLORIDE STORAGE | RTU-2 |
| 76P002 | 5#10, 2#10G | FERRIC CHLORIDE FEED | LP B |
| | | | |
| | | | |
| 77P001 | 2#12, #12G | TANK HEATER | LPBA-11 |
| 77P002 | 5#10, #10G | SHO CHEMICAL AREA, 120V | LP B |
| 77C003 | 7TSP, 12#16, 2#12 | SHO CHEMICAL AREA | RTU-2 |
| | | | |
| | | | |
| | | | |
| 91P001 | 3-350kcMIL, 1#1/0G (2 SETS) | 91PMP001 | VFD |
| 91P002 | 3-350kcMIL, 1#1/0G (2 SETS) | 91PMP002 | VFD |
| 91P003 | 3-350kcMIL, 1#1/0G (2 SETS) | 91PMP003 | VFD |
| 91C004 | 18#12 | 91PMP001, 002, 003 | VFD |
| 91C005 | F.O. CABLE | RTU-8 | SCADA CONTROL BLDG |
| 91C006 | 20#12, DATA CABLES | STANDBY GENERATOR | SYNCHRONIZER PANEL |
| 91P007 | 3-350kcMIL, #1/0N, #2/0G (3 SETS) | STANDBY GENERATOR | ATS |
| 91P008 | 3#8, #10G | XFMR D | SWBD 1001 |
| 91P009 | 3#10, #10G | AIR COMPRESSOR | SWBD 1001 |
| 91C010 | 6#16 | AIR COMPRESSOR | RTU-2 |
| | | | |
| | | | |
| | | | |
| | | | |

FILE: 215786-00E106.dwg
DATE: Oct 06, 2015-7:25:21pm, rsnider

HDR Engineering, Inc.

| ISSUE | DATE | DESCRIPTION |
|---|---|---|
| A | JUNE 2015 | ISSUED FOR BID |

| | |
|---|---|
| PROJECT MANAGER | C. OLSON |
| DESIGNED | W.F. ETTLICH |
| DESIGNED | |
| CHECKED | L.D. SMITHEY |
| DRAWN | E.G. SESPENE |
| DATE | JUNE 30, 2015 |
| PROJECT NUMBER | 215786 |

REGISTERED PROFESSIONAL ENGINEER
WILLIAM F. ETTLICH
NO. 07625
EXP. 09/30/16
ELECTRICAL
STATE OF CALIFORNIA
06-30-15

CITY OF PINOLE CALIFORNIA 1903

PINOLE/HERCULES
WATER POLLUTION
CONTROL PLANT UPGRADE
CLIENT PN

**ELECTRICAL**

**CONDUCTOR SCHEDULES**

0 1" 2"

| | |
|---|---|
| FILENAME | 215786-00E106 |
| SCALE | NONE |

SHEET **00E106**

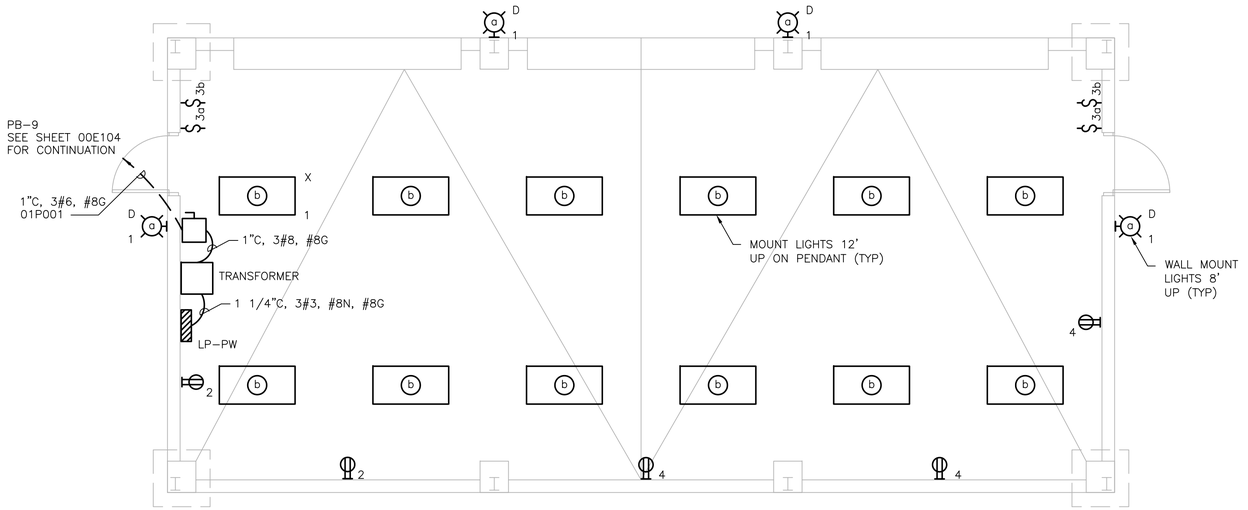


# ELECTRICAL PLAN

FILE: 215786-01E101.dwg
DATE: Oct 07, 2015-4:29:03am, rsnider

HDR Engineering, Inc.

| ISSUE | DATE | DESCRIPTION |
|---|---|---|
| | | |
| | | |
| | | |
| | | |
| | | |
| | | |
| | | |
| A | JUNE 2015 | ISSUED FOR BID |

| | |
|---|---|
| PROJECT MANAGER | C. OLSON |
| | |
| DESIGNED | W.F. ETTLICH |
| DESIGNED | |
| CHECKED | L.D. SMITHEY |
| DRAWN | E.G. SESPENE |
| DATE | JUNE 30, 2015 |
| | |
| PROJECT NUMBER | 215786 |

REGISTERED PROFESSIONAL ENGINEER
WILLIAM F. ETTLICH
NO. 07625
EXP. 09/30/16
ELECTRICAL
STATE OF CALIFORNIA
06-30-15

CITY OF PINOLE CALIFORNIA 1903

PINOLE/HERCULES
WATER POLLUTION
CONTROL PLANT UPGRADE
CLIENT PN

**ELECTRICAL**

**PUBLIC WORKS**
**ELECTRICAL PLAN**

0 1" 2"

| | |
|---|---|
| FILENAME | 215786-01E101 |
| SCALE | ELECTRICAL PLAN |

SHEET
**01E101**

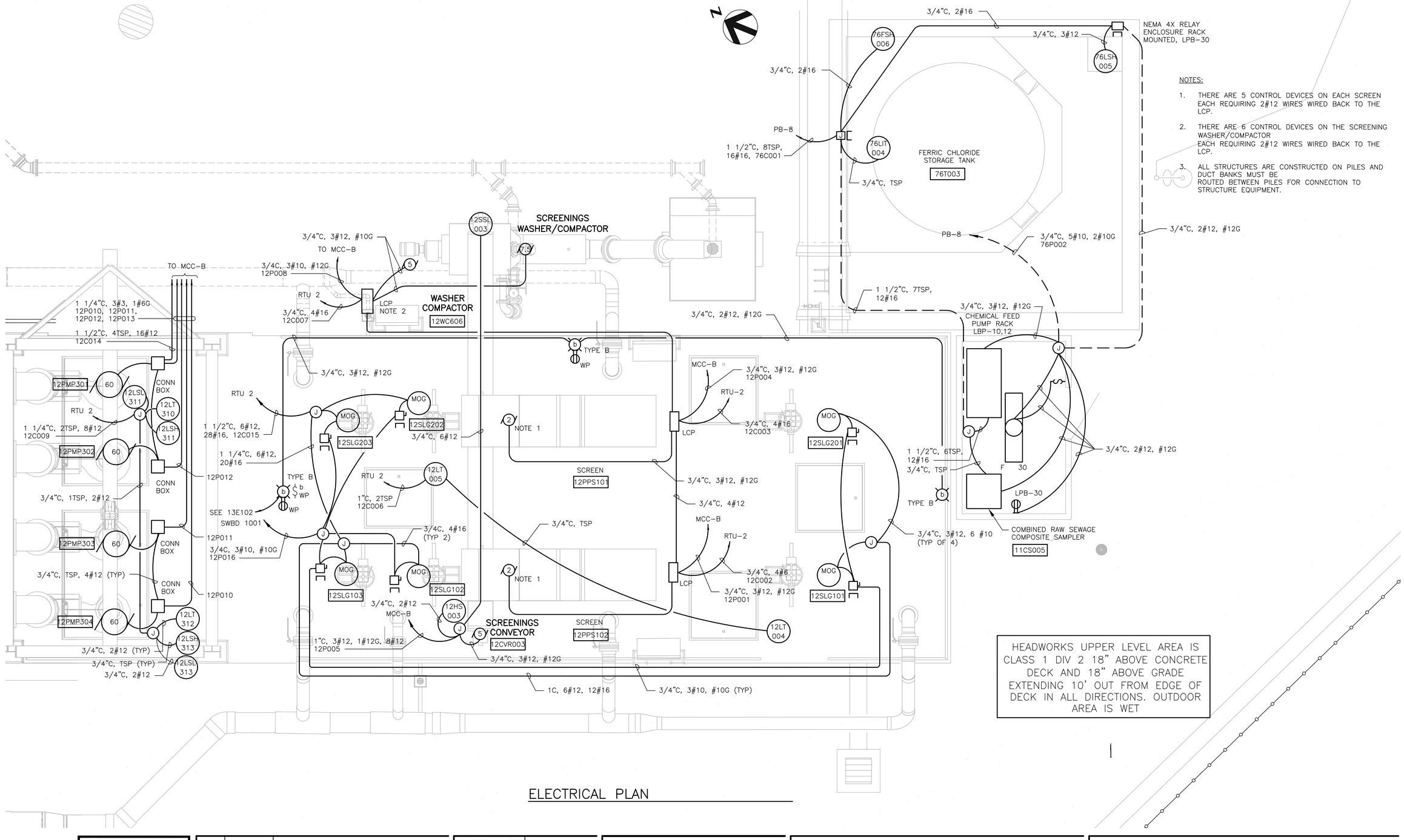


NOTES:

1. THERE ARE 5 CONTROL DEVICES ON EACH SCREEN EACH REQUIRING 2#12 WIRES WIRED BACK TO THE LCP.
2. THERE ARE 6 CONTROL DEVICES ON THE SCREENING WASHER/COMPACTOR EACH REQUIRING 2#12 WIRES WIRED BACK TO THE LCP.
3. ALL STRUCTURES ARE CONSTRUCTED ON PILES AND DUCT BANKS MUST BE ROUTED BETWEEN PILES FOR CONNECTION TO STRUCTURE EQUIPMENT.

HEADWORKS UPPER LEVEL AREA IS CLASS 1 DIV 2 18" ABOVE CONCRETE DECK AND 18" ABOVE GRADE EXTENDING 10' OUT FROM EDGE OF DECK IN ALL DIRECTIONS. OUTDOOR AREA IS WET

ELECTRICAL PLAN

FILE: 215786-12E101.dwg
DATE: Oct 07, 2015-4:31:52am, rsnider

HDR
HDR Engineering, Inc.

| ISSUE | DATE | DESCRIPTION |
|---|---|---|
| A | JUNE 2015 | ISSUED FOR BID |

| | |
|---|---|
| PROJECT MANAGER | C. OLSON |
| DESIGNED | W.F. ETTLICH |
| DESIGNED | |
| CHECKED | L.D. SMITHEY |
| DRAWN | E.G. SESPENE |
| DATE | JUNE 30, 2015 |
| PROJECT NUMBER | 215786 |

REGISTERED PROFESSIONAL ENGINEER WILLIAM F. ETTLICH NO. 07625 EXP. 09/30/16 ELECTRICAL STATE OF CALIFORNIA 06-30-15

CITY OF PINOLE CALIFORNIA 1903

PINOLE/HERCULES WATER POLLUTION CONTROL PLANT UPGRADE CLIENT PN

**ELECTRICAL**

**HEADWORKS ELECTRICAL PLAN**

0 1" 2"

| | |
|---|---|
| FILENAME | 215786-12E101 |
| SCALE | 3/8"=1'-0" |

SHEET 12E101

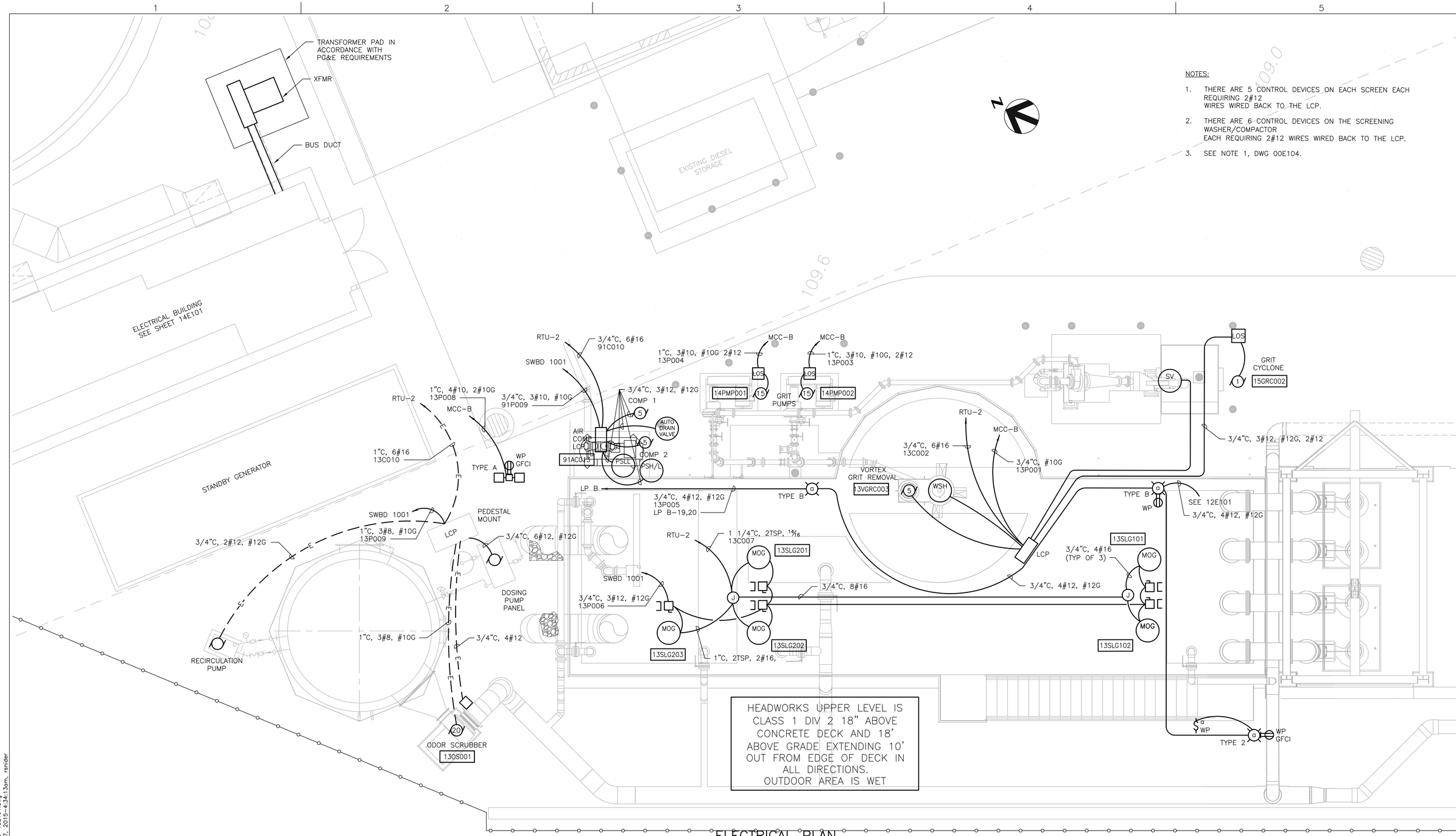


NOTES:

1. THERE ARE 5 CONTROL DEVICES ON EACH SCREEN EACH REQUIRING 2#12 WIRES WIRED BACK TO THE LCP.
2. THERE ARE 6 CONTROL DEVICES ON THE SCREENING WASHER/COMPACTOR EACH REQUIRING 2#12 WIRES WIRED BACK TO THE LCP.
3. SEE NOTE 1, DWG 00E104.

ELECTRICAL PLAN

FILE: 215786-13E101.dwg
DATE: Oct 07, 2015-4:34:13am, rsnider

HDR
HDR Engineering, Inc.

| ISSUE | DATE | DESCRIPTION |
|---|---|---|
| A | JUNE 2015 | ISSUED FOR BID |

| | |
|---|---|
| PROJECT MANAGER | C. OLSON |
| DESIGNED | W.F. ETTLICH |
| DESIGNED | |
| CHECKED | L.D. SMITHEY |
| DRAWN | E.G. SESPENE |
| DATE | JUNE 30, 2015 |
| PROJECT NUMBER | 215786 |

REGISTERED PROFESSIONAL ENGINEER WILLIAM F. ETTLICH NO. 07625 EXP. 09/30/16 ELECTRICAL STATE OF CALIFORNIA 06-30-15

CITY OF PINOLE CALIFORNIA 1903

PINOLE/HERCULES WATER POLLUTION CONTROL PLANT UPGRADE CLIENT PN

**ELECTRICAL**

**GRIT ELECTRICAL PLAN**

0 1" 2"

| | |
|---|---|
| FILENAME | 215786-13E101 |
| SCALE | 1/8"=1'-0" |

SHEET 13E101

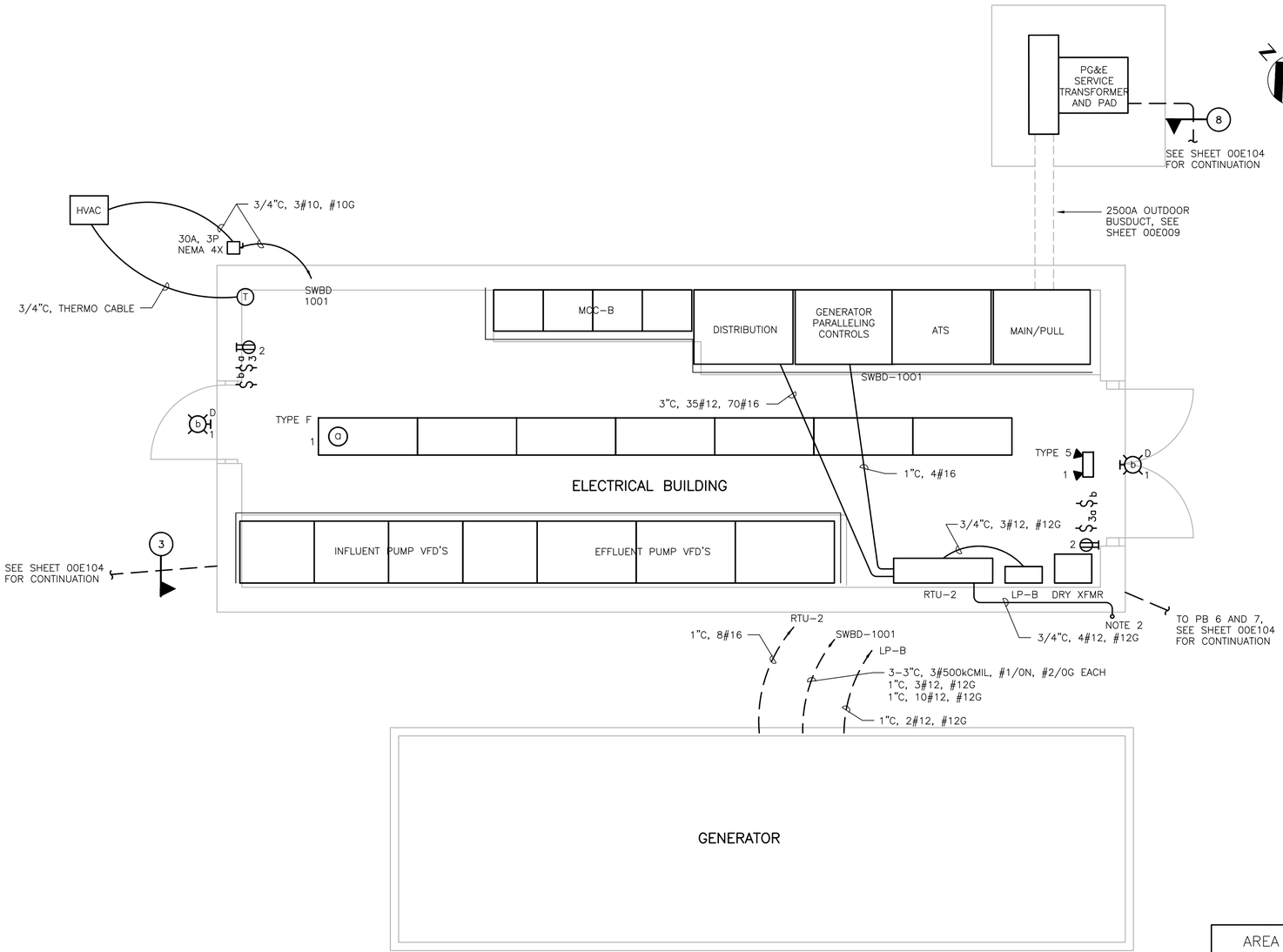


NOTES:

1. ALL STRUCTURES ARE CONSTRUCTED ON PILES AND DUCT BANKS MUST BE ROUTED BETWEEN PILES FOR CONNECTION TO STRUCTURE EQUIPMENT. DO NOT ENCASE DUCTS AND CONDUITS UNDER THE BUILDINGS.
2. MOUNT PHOTO ELECTRIC CELL FOR SITE LIGHTING ON 1" CONDUIT ON SIDE OF THE BUILDING.

AREA INSIDE ELECTRICAL BUILDING IS DRY. OUTSIDE AREAS ARE WET

## ELECTRICAL PLAN

FILE: 215786-14E101.dwg
DATE: Oct 07, 2015-4:36:23pm, rsnider

HDR Engineering, Inc.

| ISSUE | DATE | DESCRIPTION |
|---|---|---|
| A | JUNE 2015 | ISSUED FOR BID |

| | |
|---|---|
| PROJECT MANAGER | C. OLSON |
| DESIGNED | W.F. ETTLICH |
| DESIGNED | |
| CHECKED | L.D. SMITHEY |
| DRAWN | E.G. SESPENE |
| DATE | JUNE 30, 2015 |
| PROJECT NUMBER | 215786 |

REGISTERED PROFESSIONAL ENGINEER WILLIAM F. ETTLICH NO. 07625 EXP. 09/30/16 ELECTRICAL STATE OF CALIFORNIA 06-30-15

CITY OF PINOLE CALIFORNIA 1903

PINOLE/HERCULES WATER POLLUTION CONTROL PLANT UPGRADE CLIENT PN

**ELECTRICAL**

**ELECTRICAL BUILDING GENERATOR AREA ELECTRICAL PLAN**

0 1" 2"

| | |
|---|---|
| FILENAME | 215786-14E101 |
| SCALE | 3/8"=1'-0" |

SHEET **14E101**

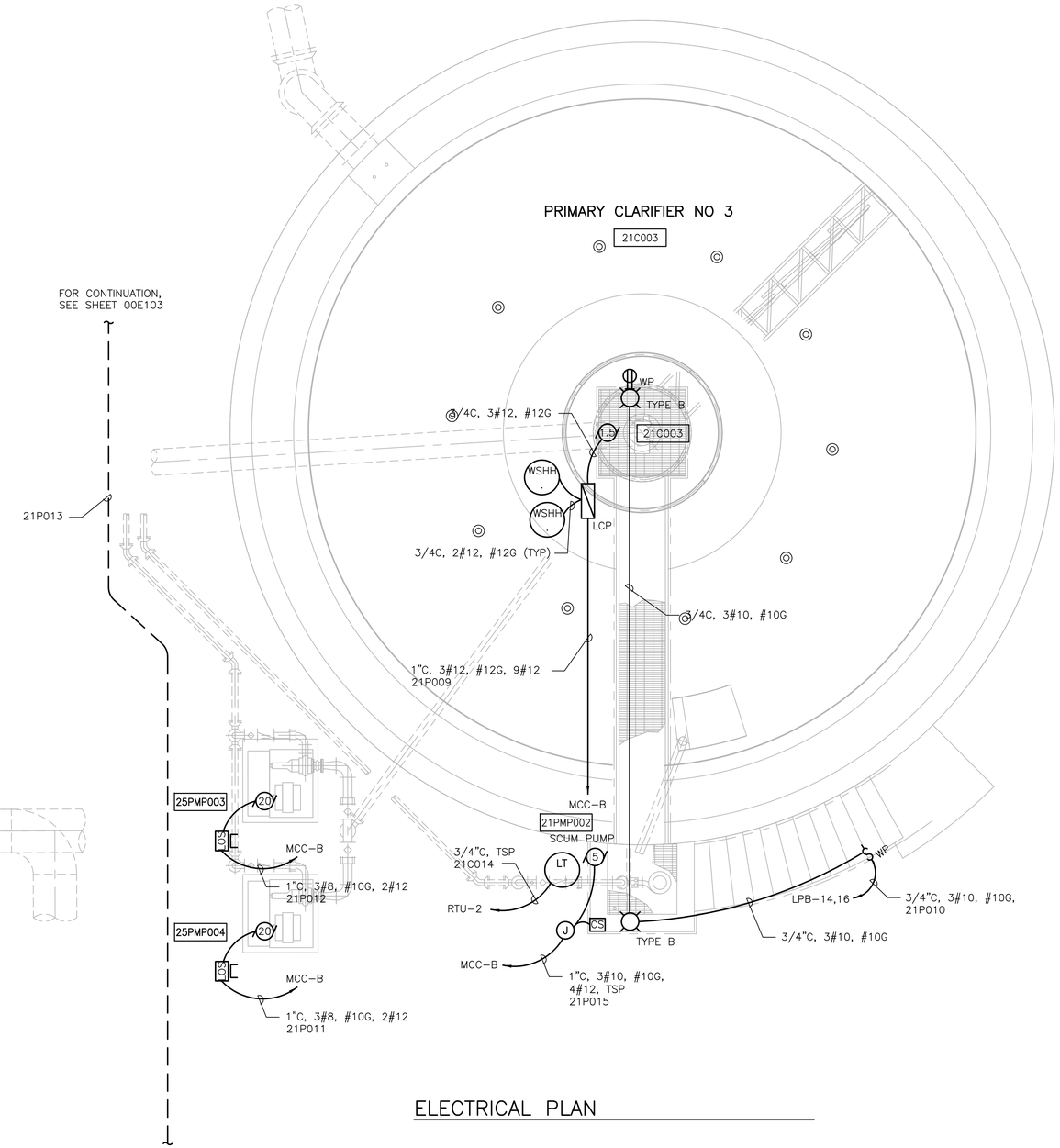


ELECTRICAL PLAN

N

ALL OUTDOOR AREAS CLASSIFIED WET. PRIMARY CLARIFIIERS CLASSIFIED CLASS 1 DIV 2 WITH IN CLARIFIER TO 18" ABOVE TOP OF CONCRETE WALL AND 18" ABOVE GRADE FOR 10' OUT FROM CLARIFIER WALLS

FILE: 215786-21E101.dwg
DATE: Oct 07, 2015-4:40:39am, ranider

HDR Engineering, Inc.

| ISSUE | DATE | DESCRIPTION |
|---|---|---|
| A | JUNE 2015 | ISSUED FOR BID |

| | |
|---|---|
| PROJECT MANAGER | C. OLSON |
| DESIGNED | F.W. ETTLICH |
| DESIGNED | |
| CHECKED | L.D. SMITHEY |
| DRAWN | E.G. SESPENE |
| DATE | JUNE 30, 2015 |
| PROJECT NUMBER | 215786 |

REGISTERED PROFESSIONAL ENGINEER
WILLIAM F. ETTLICH
NO. 07625
EXP. 09/30/16
ELECTRICAL
STATE OF CALIFORNIA
06-30-15

CITY OF PINOLE CALIFORNIA 1903

PINOLE/HERCULES
WATER POLLUTION
CONTROL PLANT UPGRADE
CLIENT PN

**ELECTRICAL**

**PRIMARY CLARIFIER NO. 3**
**ELECTRICAL PLAN**

0 1" 2"

| | |
|---|---|
| FILENAME | 215786-21E101 |
| SCALE | 1/4"=1'-0" |

SHEET
**21E101**

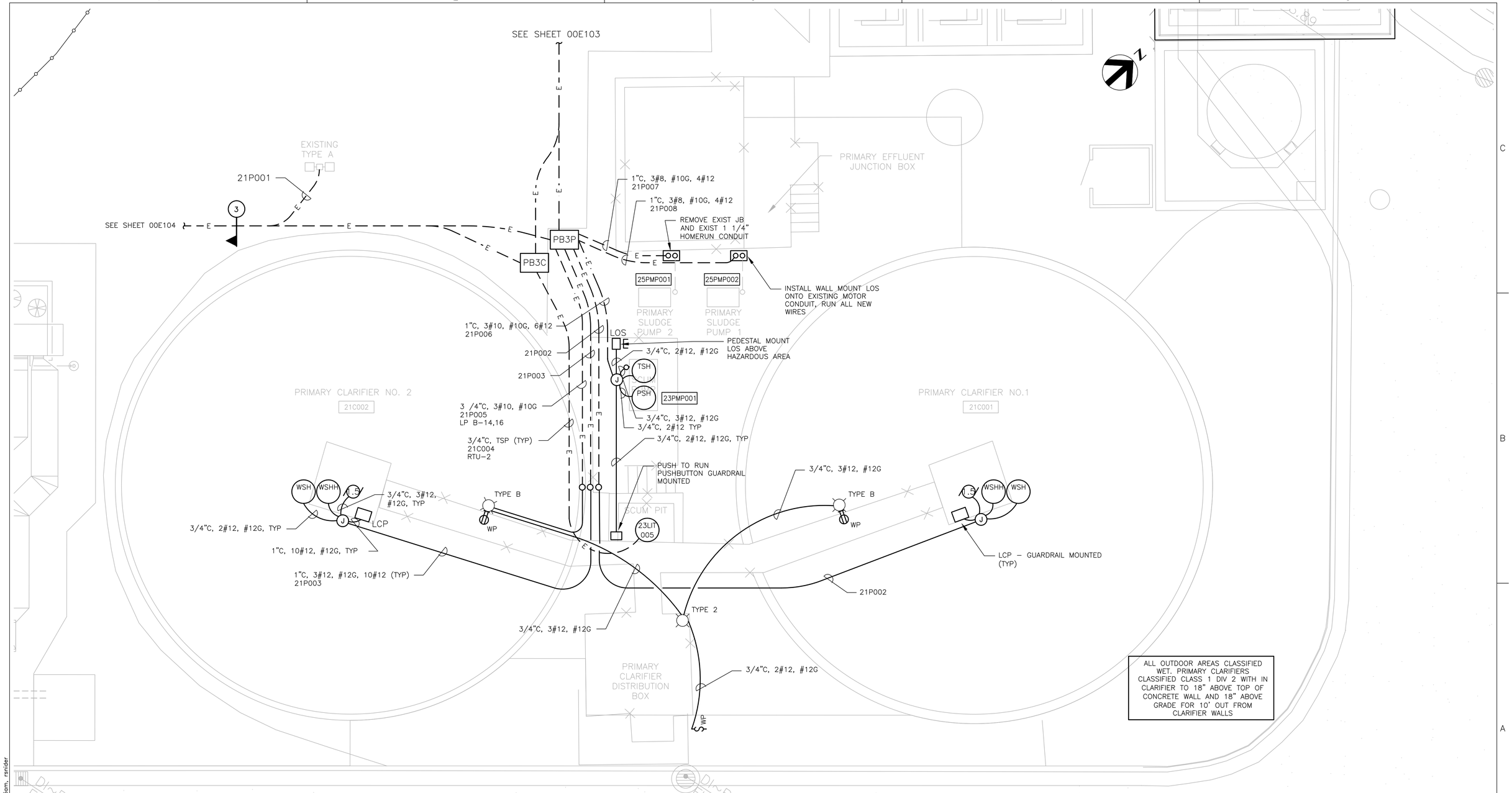


# ELECTRICAL PLAN

FILE: 215786-21E102.dwg
DATE: Oct 07, 2015-4:40:55am, rsnider

HDR Engineering, Inc.

| ISSUE | DATE | DESCRIPTION |
|---|---|---|
| | | |
| | | |
| | | |
| | | |
| | | |
| | | |
| A | JUNE 2015 | ISSUED FOR BID |

| | |
|---|---|
| PROJECT MANAGER | C. OLSON |
| | |
| DESIGNED | F.W. ETTLICH |
| DESIGNED | |
| CHECKED | L.D. SMITHEY |
| DRAWN | E.G. SESPENE |
| DATE | JUNE 30, 2015 |
| | |
| PROJECT NUMBER | 215786 |

REGISTERED PROFESSIONAL ENGINEER
WILLIAM F. ETTLICH
NO. 07625
EXP. 09/30/16
ELECTRICAL
STATE OF CALIFORNIA
06-30-15

CITY OF PINOLE CALIFORNIA 1903

PINOLE/HERCULES
WATER POLLUTION
CONTROL PLANT UPGRADE
CLIENT PN

**ELECTRICAL**

**PRIMARY CLARIFIERS NO 1 AND NO 2 ELECTRICAL PLAN**

0 1" 2"

| | |
|---|---|
| FILENAME | 215786-21E102 |
| SCALE | 1"=5'-0" |

SHEET **21E102**

NOTES:

1. SUPPORT IN GUARDRAIL EVERY 6' MAXIMUM USING STRUT, SEE DETAIL SHEET XXEXXX.
2. CONDUITS MAY BE RUN ON WALL BELOW DECK ON STRUT.
3. TYPICAL FOR ALL ANALYZERS, PROVIDE WATERPROOF DUPLEX OUTLET AND CORD AND PLUG ON ANALYZERS.
4. INTERCEPT EXISTING CONDUIT AND WIRE FOR EXISTING FIXTURE AND EXTEND AS SHOWN, 3/4"C, 4#10, #10G.
5. CONDUITS TO BE RUN ON OVERHEAD SUPPORTS. COMBINE WIRING TO PRODUCE FINAL CONDUIT/CONDUCTOR RUNS SHOWN.

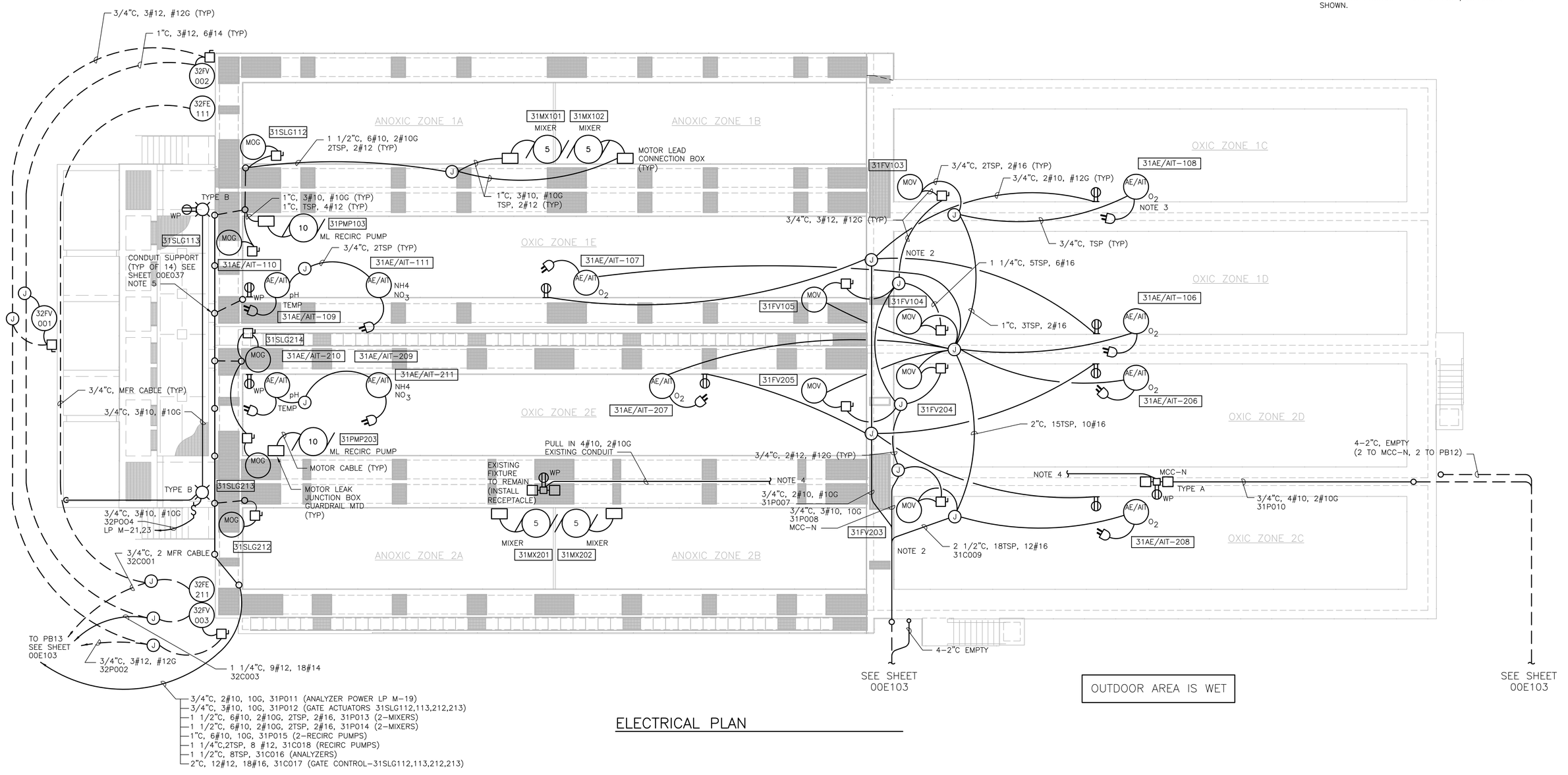


## ELECTRICAL PLAN

FILE: 215786-31E101.dwg
DATE: Oct 07, 2015-4:45:02pm, rsnider

HDR Engineering, Inc.

| ISSUE | DATE | DESCRIPTION |
|---|---|---|
| A | JUNE 2015 | ISSUED FOR BID |

| | |
|---|---|
| PROJECT MANAGER | C. OLSON |
| DESIGNED | W.F. ETTLICH |
| DESIGNED | |
| CHECKED | L.D. SMITHEY |
| DRAWN | E.G. SESPENE |
| DATE | JUNE 30, 2015 |
| PROJECT NUMBER | 215786 |

REGISTERED PROFESSIONAL ENGINEER
WILLIAM F. ETTLICH
NO. 07625
EXP. 09/30/16
ELECTRICAL
STATE OF CALIFORNIA
06-30-15

CITY OF PINOLE CALIFORNIA 1903

PINOLE/HERCULES
WATER POLLUTION
CONTROL PLANT UPGRADE
CLIENT PN

**ELECTRICAL**

**AERATION BASIN DECK LEVEL ELECTRICAL PLAN**

0 1" 2"

| | |
|---|---|
| FILENAME | 215786-31E101 |
| SCALE | 1/8"=1'-0" |

SHEET **31E101**

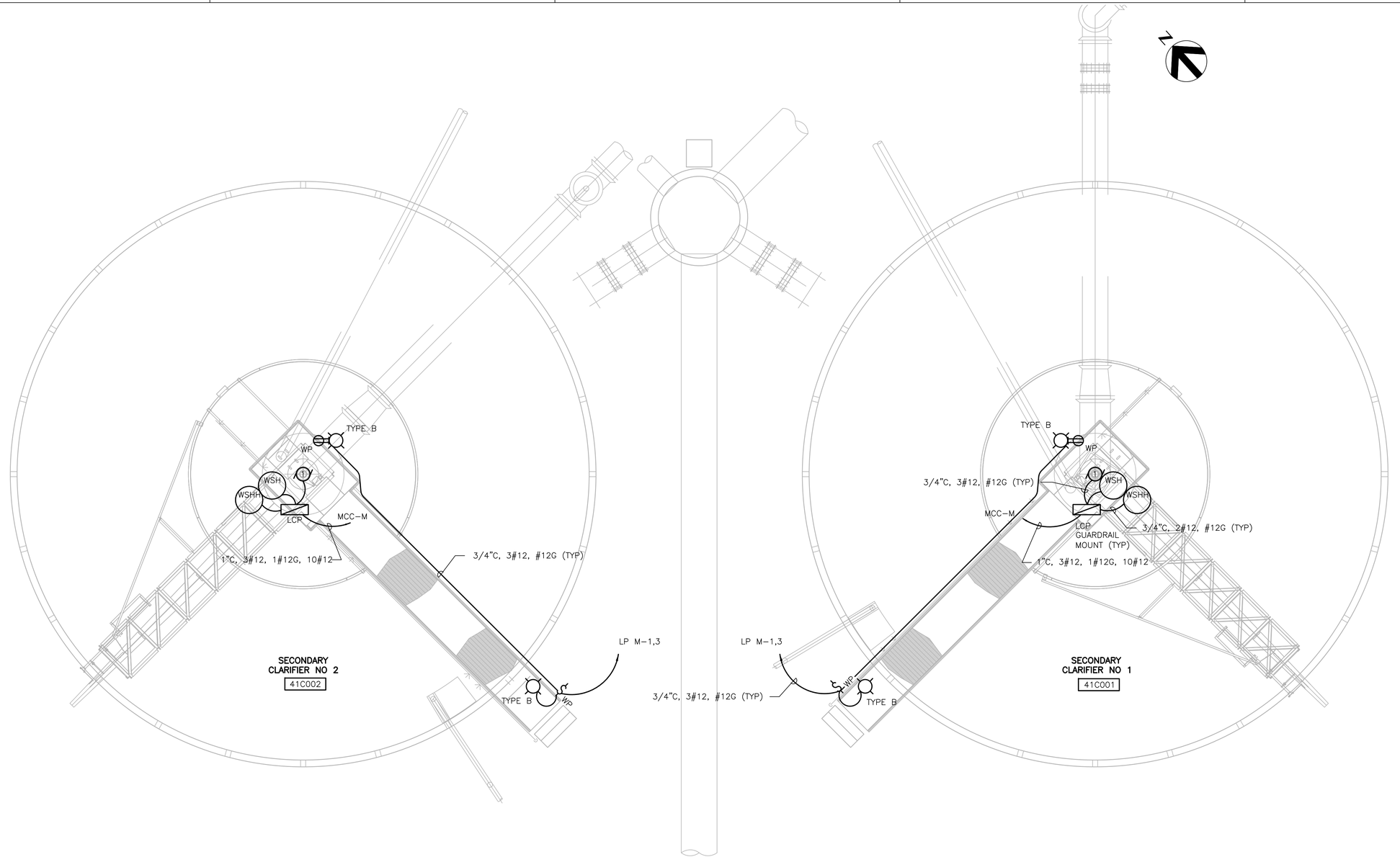


OUTDOOR AREA IS WET

# ELECTRICAL PLAN

FILE: 215786–41E101.dwg
DATE: Oct 07, 2015–4:47:53am, rsnider

HDR Engineering, Inc.

| ISSUE | DATE | DESCRIPTION |
|---|---|---|
| A | JUNE 2015 | ISSUED FOR BID |

| | |
|---|---|
| PROJECT MANAGER | C. OLSON |
| DESIGNED | F.W. ETTLICH |
| DESIGNED | |
| CHECKED | L.D. SMITHEY |
| DRAWN | E.G. SESPENE |
| DATE | JUNE 30, 2015 |
| PROJECT NUMBER | 215786 |

REGISTERED PROFESSIONAL ENGINEER
WILLIAM F. ETTLICH
NO. 07625
EXP. 09/30/16
ELECTRICAL
STATE OF CALIFORNIA
06-30-15

CITY OF PINOLE CALIFORNIA 1903

PINOLE/HERCULES
WATER POLLUTION
CONTROL PLANT UPGRADE
CLIENT PN

**ELECTRICAL**

**SECONDARY CLARIFIERS NO 1 AND NO 2**
**ELECTRICAL PLAN**

0 1" 2"

| | |
|---|---|
| FILENAME | 215786–41E101 |
| SCALE | 3/16"=1'–0" |

SHEET
**41E101**

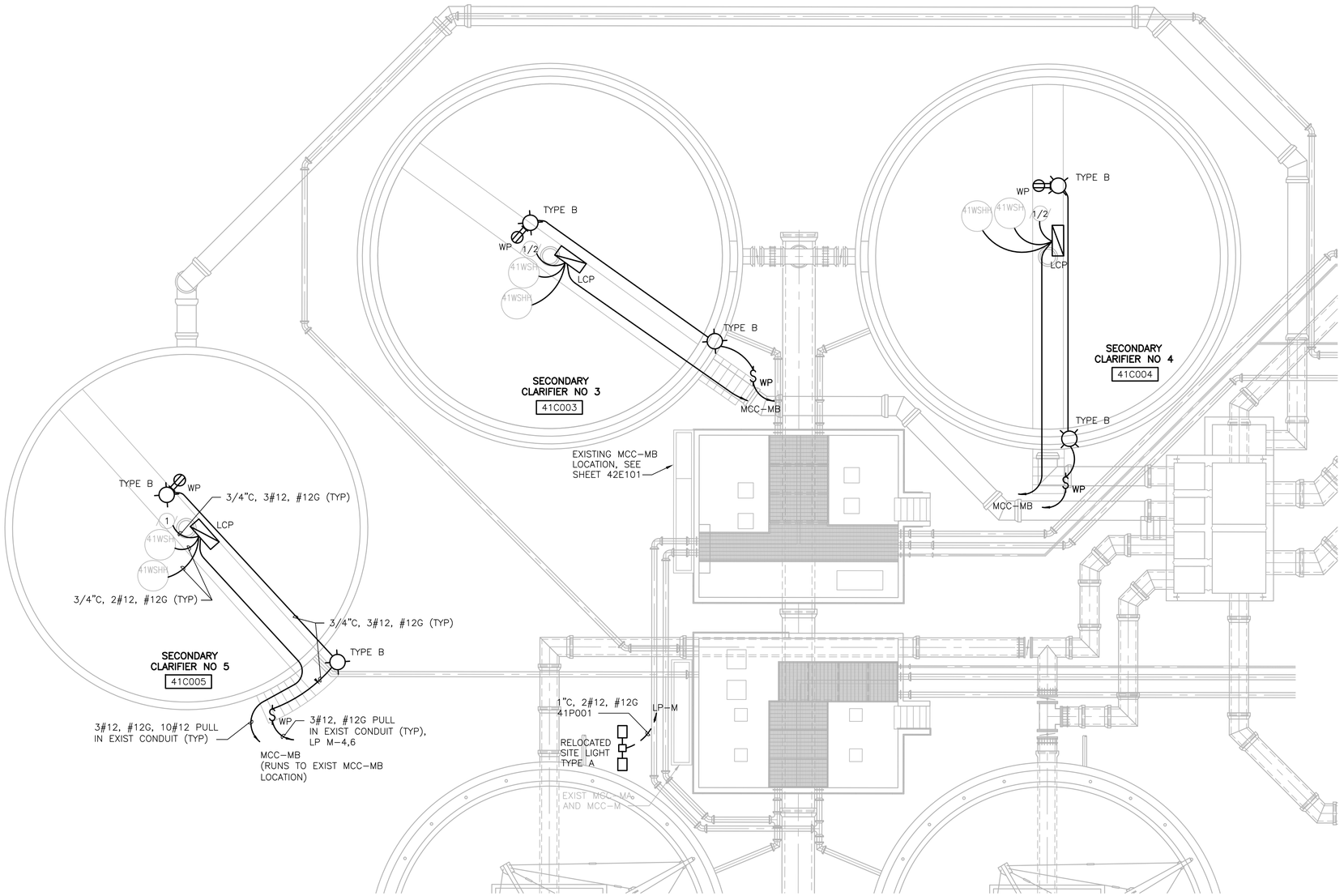


OUTDOOR AREA IS WET

# ELECTRICAL PLAN

FILE: 215786–41E102.dwg
DATE: Oct 07, 2015–4:47:59pm, rsnider

HDR Engineering, Inc.

| ISSUE | DATE | DESCRIPTION |
|---|---|---|
| A | JUNE 2015 | ISSUED FOR BID |

| | |
|---|---|
| PROJECT MANAGER | C. OLSON |
| DESIGNED | F.W. ETTLICH |
| DESIGNED | |
| CHECKED | L.D. SMITHEY |
| DRAWN | E.G. SESPENE |
| DATE | JUNE 30, 2015 |
| PROJECT NUMBER | 215786 |

REGISTERED PROFESSIONAL ENGINEER
WILLIAM F. ETTLICH
NO. 07625
EXP. 09/30/16
ELECTRICAL
STATE OF CALIFORNIA
06-30-15

CITY OF PINOLE CALIFORNIA 1903

PINOLE/HERCULES
WATER POLLUTION
CONTROL PLANT UPGRADE
CLIENT PN

**ELECTRICAL**

**EXISTING SECONDARY CLARIFIERS NO. 3, 4 & 5 ELECTRICAL PLAN**

0 1" 2"

| | |
|---|---|
| FILENAME | 215786–41E102 |
| SCALE | 1/8"=1'–0" |

SHEET **41E102**

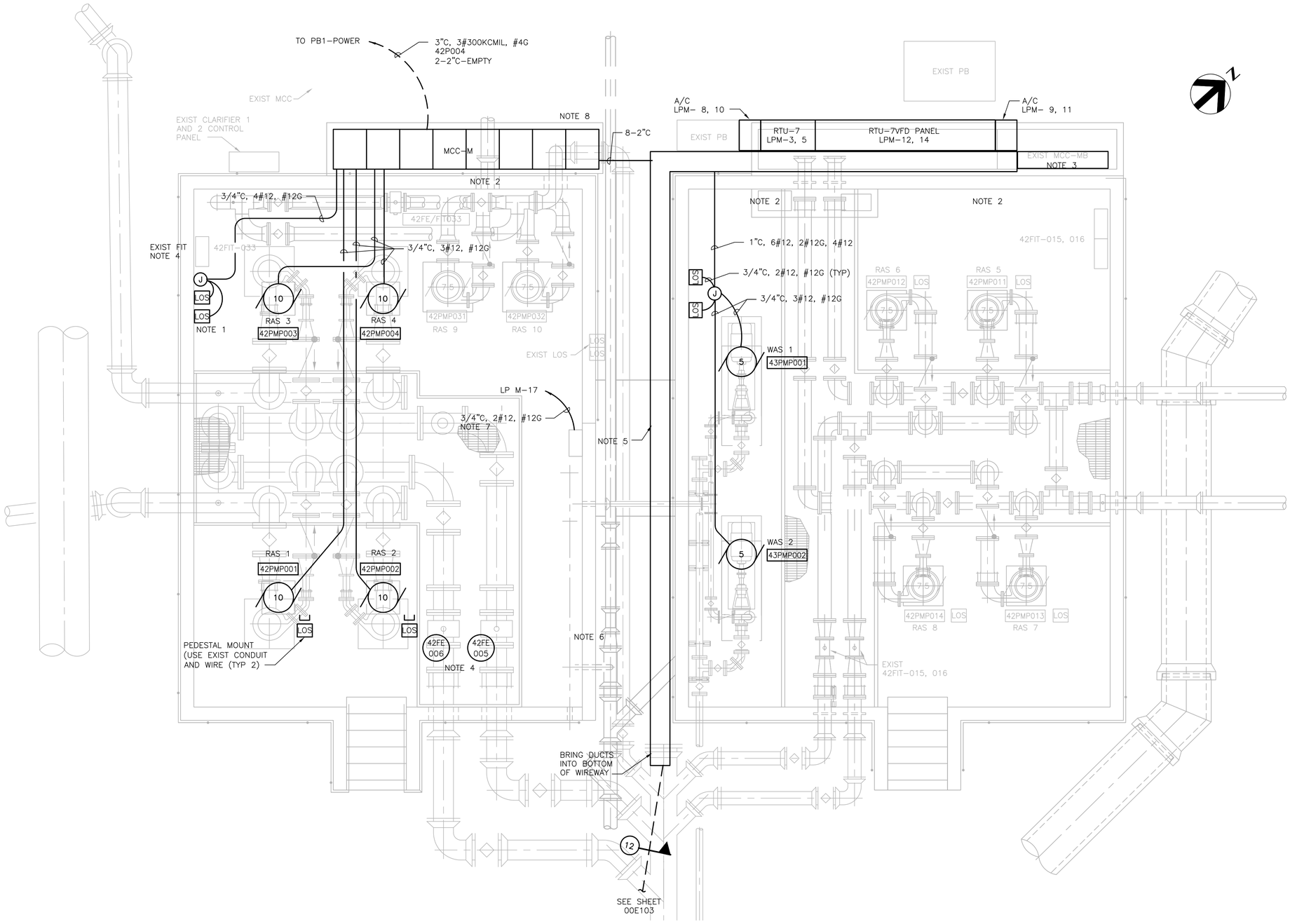


## ELECTRICAL PLAN

NOTES:

1. REMOVE RAS 3 AND 4 PUMP LOS PEDESTALS. WALL MOUNT RAS SWITCHES AND WIRE BACK TO MCC AS SHOWN.
2. DISCONNECT AND RECONNECT ALL EXISTING CONDUITS AND WIRES TO REPLACEMENT VFD PANEL, RTU–7 AND MCC–M AS REQUIRED. TAG WIRES BEFORE REMOVAL OF WIRING FROM EXISTING PANELS.
3. EXISTING MCC–MB LOCATION. MOUNT WIREWAY OVER EXISTING MCC–MB CONDUITS STUBBED UP FROM CONCRETE, SEE SHEET 00E033.
4. REPLACE EXISTING FLOW METERS AND TRANSMITTERS, EXTEND AND CONNECT EXISTING CONDUITS, PULL MFR CABLES FROM FE'S TO FIT'S AND INSTALL AND CONNECT FIT'S IN EXISTING ENCLOSURE.
5. INSTALL 12"x12" NEMA 4X WIREWAY WITH GASKETED REMOVABLE TOP COVER AND DIVIDING WALL ALONG MIDDLE OF WIREWAY TO FORM POWER AND INSTRUMENT WIREWAYS.
6. CONNECT EXISTING WAS CONTROL VALVES, 43FCV009, 010 I/O TO RTU–7 AND POWER TO LPM–20.
7. CONNECT POWER TO EXISTING WAS FLOW TRANSMITTERS, 43FIT007, 008 AS SHOWN.
8. MCC–M TO BE INSTALLED IN 2 STEPS, SEE CONSTRUCTION SEQUENCE.
9. CONNECT EXIST 2–2" AND 1"C INTO RTU–7 AND RECONNECT WIRES TO RTU–7.

| ISSUE | DATE | DESCRIPTION |
|---|---|---|
| A | JUNE 2015 | ISSUED FOR BID |

HDR Engineering, Inc.

| | |
|---|---|
| PROJECT MANAGER | C. OLSON |
| DESIGNED | F.W. ETTLICH |
| DESIGNED | |
| CHECKED | L.D. SMITHEY |
| DRAWN | E.G. SESPENE |
| DATE | JUNE 30, 2015 |
| PROJECT NUMBER | 215786 |

REGISTERED PROFESSIONAL ENGINEER
WILLIAM F. ETTLICH
NO. 07625
EXP. 09/30/16
ELECTRICAL
STATE OF CALIFORNIA
06-30-15

CITY OF PINOLE CALIFORNIA 1903

PINOLE/HERCULES
WATER POLLUTION
CONTROL PLANT UPGRADE
CLIENT PN

**ELECTRICAL**

**EXISTING RAS PUMP STATION ELECTRICAL PLAN**

0 1" 2"

| | |
|---|---|
| FILENAME | 215786–42E101 |
| SCALE | 3/8"=1'–0" |

SHEET **42E101**

FILE: 215786–42E101.dwg
DATE: Oct 07, 2015–4:48:57am, rsnider

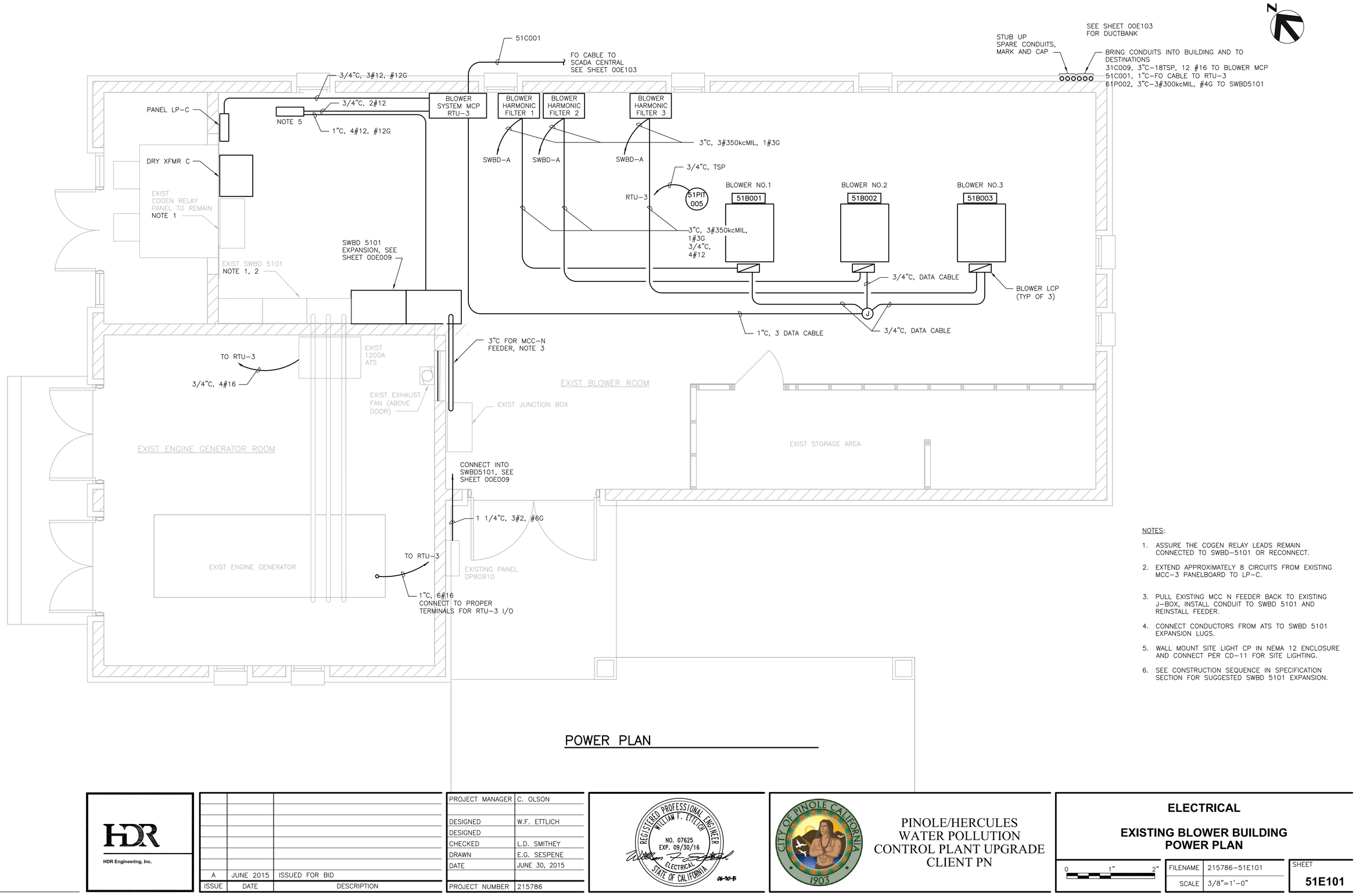


NOTES:

1. ASSURE THE COGEN RELAY LEADS REMAIN CONNECTED TO SWBD-5101 OR RECONNECT.
2. EXTEND APPROXIMATELY 8 CIRCUITS FROM EXISTING MCC-3 PANELBOARD TO LP-C.
3. PULL EXISTING MCC N FEEDER BACK TO EXISTING J-BOX, INSTALL CONDUIT TO SWBD 5101 AND REINSTALL FEEDER.
4. CONNECT CONDUCTORS FROM ATS TO SWBD 5101 EXPANSION LUGS.
5. WALL MOUNT SITE LIGHT CP IN NEMA 12 ENCLOSURE AND CONNECT PER CD-11 FOR SITE LIGHTING.
6. SEE CONSTRUCTION SEQUENCE IN SPECIFICATION SECTION FOR SUGGESTED SWBD 5101 EXPANSION.

# POWER PLAN

FILE: 215786-51E101.dwg
DATE: Oct 07, 2015-4:49:51am, rsnider

HDR Engineering, Inc.

| ISSUE | DATE | DESCRIPTION |
|---|---|---|
| A | JUNE 2015 | ISSUED FOR BID |

| | |
|---|---|
| PROJECT MANAGER | C. OLSON |
| DESIGNED | W.F. ETTLICH |
| DESIGNED | |
| CHECKED | L.D. SMITHEY |
| DRAWN | E.G. SESPENE |
| DATE | JUNE 30, 2015 |
| PROJECT NUMBER | 215786 |

REGISTERED PROFESSIONAL ENGINEER WILLIAM F. ETTLICH NO. 07625 EXP. 09/30/16 ELECTRICAL STATE OF CALIFORNIA 06-30-15

CITY OF PINOLE CALIFORNIA 1903

PINOLE/HERCULES WATER POLLUTION CONTROL PLANT UPGRADE
CLIENT PN

**ELECTRICAL**

**EXISTING BLOWER BUILDING POWER PLAN**

0 1" 2"

| | |
|---|---|
| FILENAME | 215786-51E101 |
| SCALE | 3/8"=1'-0" |

SHEET **51E101**

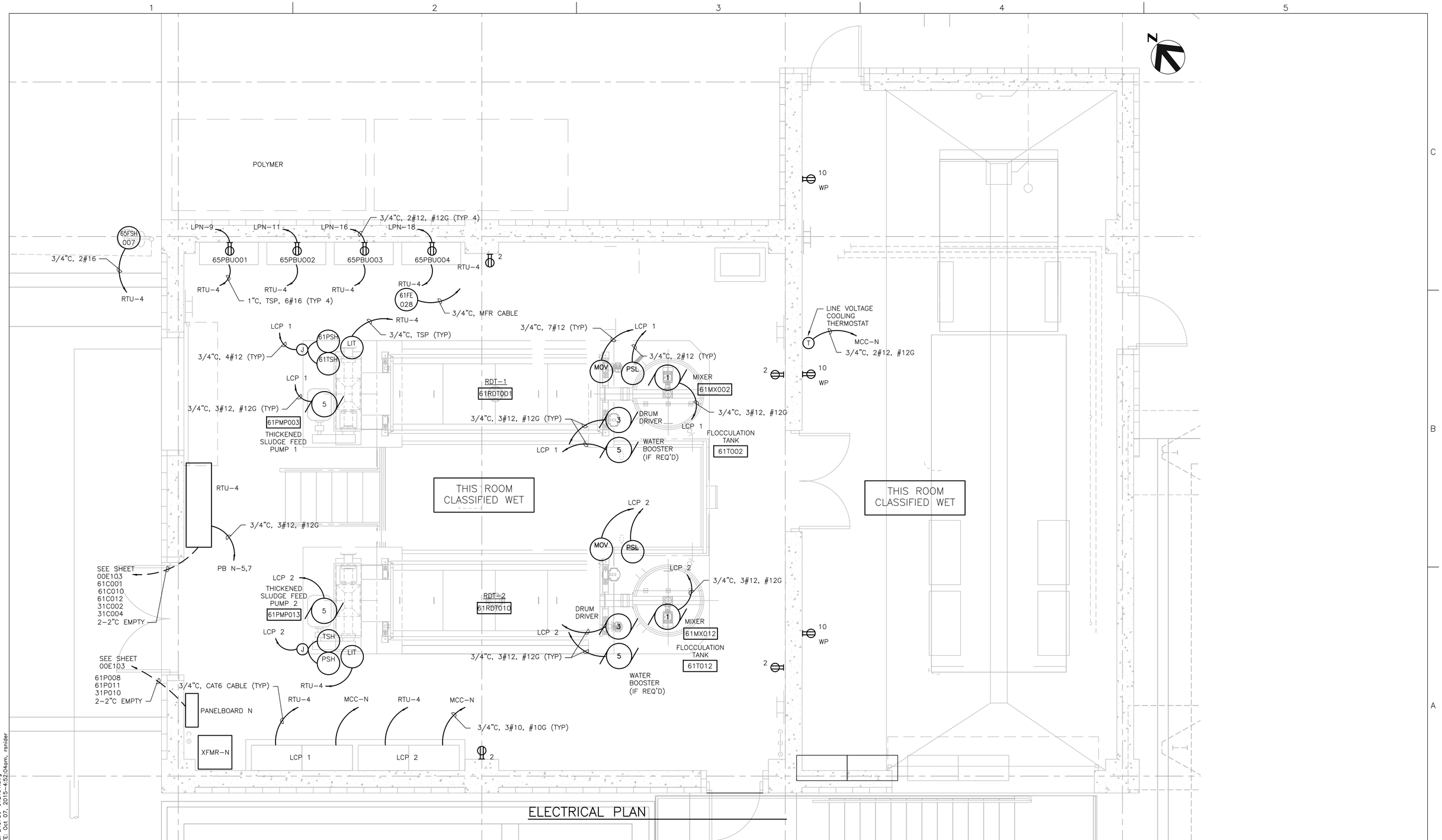


# ELECTRICAL PLAN

| | | |
|---|---|---|
| A | JUNE 2015 | ISSUED FOR BID |
| ISSUE | DATE | DESCRIPTION |

| | |
|---|---|
| PROJECT MANAGER | C. OLSON |
| | |
| DESIGNED | W.F. ETTLICH |
| DESIGNED | |
| CHECKED | L.D. SMITHEY |
| DRAWN | E.G. SESPENE |
| DATE | JUNE 30, 2015 |
| | |
| PROJECT NUMBER | 215786 |

HDR Engineering, Inc.

REGISTERED PROFESSIONAL ENGINEER
WILLIAM F. ETTLICH
NO. 07625
EXP. 09/30/16
ELECTRICAL
STATE OF CALIFORNIA
06-30-15

CITY OF PINOLE CALIFORNIA 1903

PINOLE/HERCULES
WATER POLLUTION
CONTROL PLANT UPGRADE
CLIENT PN

**ELECTRICAL**

**SOLIDS HANDLING BUILDING GROUND FLOOR ELECTRICAL PLAN**

0 1" 2"

| | |
|---|---|
| FILENAME | 215786-61E101 |
| SCALE | 3/8"=1'-0" |

SHEET **61E101**

FILE: 215786-61E101.dwg
DATE: Oct 07, 2015-4:52:04am, rsnider

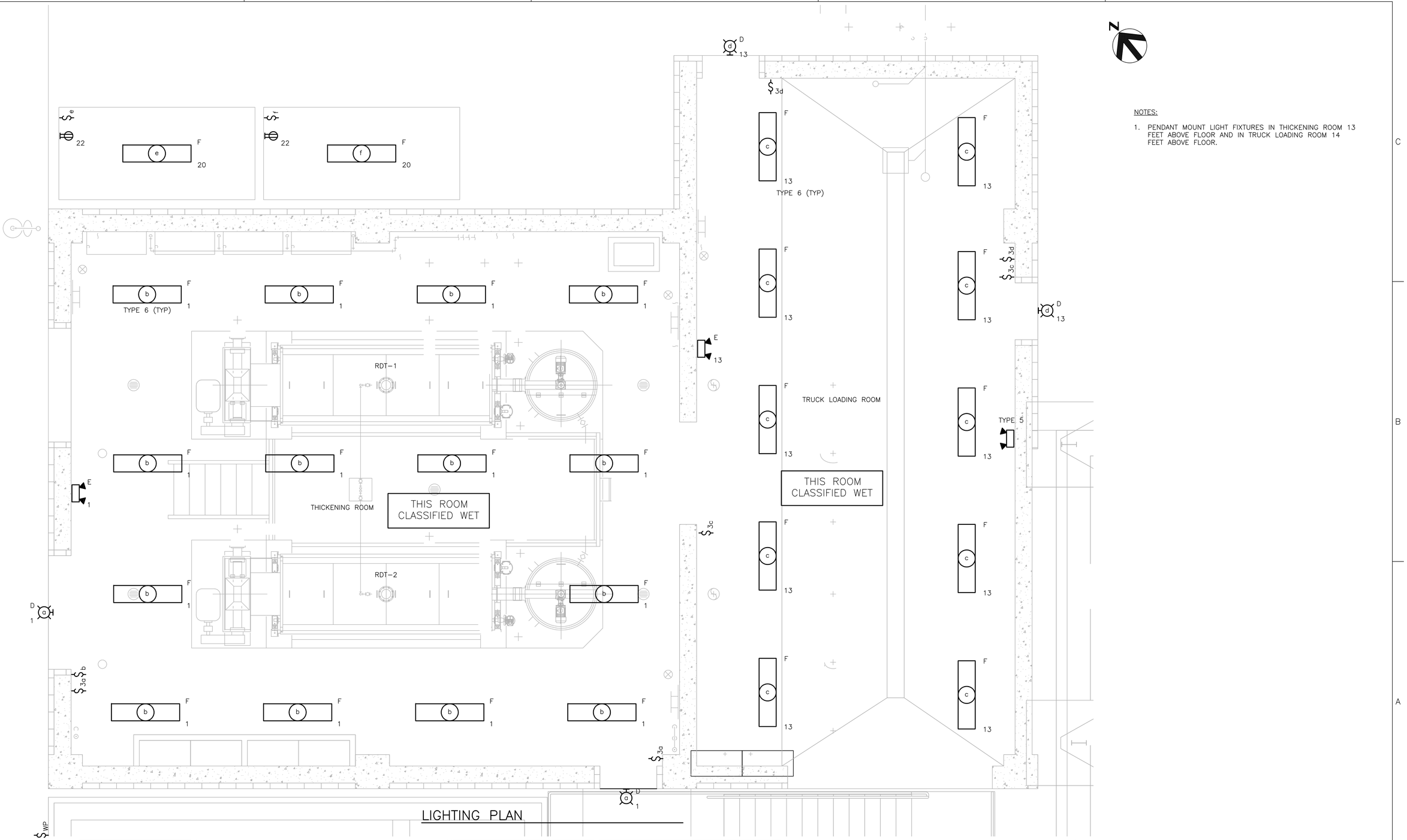


NOTES:

1. PENDANT MOUNT LIGHT FIXTURES IN THICKENING ROOM 13 FEET ABOVE FLOOR AND IN TRUCK LOADING ROOM 14 FEET ABOVE FLOOR.

FILE: 215786-61E102.dwg
DATE: Oct 07, 2015-4:52:11am, rsnider

HDR Engineering, Inc.

| ISSUE | DATE | DESCRIPTION |
|---|---|---|
| A | JUNE 2015 | ISSUED FOR BID |

| | |
|---|---|
| PROJECT MANAGER | C. OLSON |
| | |
| DESIGNED | W.F. ETTLICH |
| DESIGNED | |
| CHECKED | L.D. SMITHEY |
| DRAWN | E.G. SESPENE |
| DATE | JUNE 30, 2015 |
| | |
| PROJECT NUMBER | 215786 |

REGISTERED PROFESSIONAL ENGINEER
WILLIAM F. ETTLICH
NO. 07625
EXP. 09/30/16
ELECTRICAL
STATE OF CALIFORNIA

CITY OF PINOLE CALIFORNIA 1903

PINOLE/HERCULES
WATER POLLUTION
CONTROL PLANT UPGRADE
CLIENT PN

**ELECTRICAL**

**SOLIDS HANDLING BUILDING GROUND FLOOR LIGHTING PLAN**

0 1" 2"

| | |
|---|---|
| FILENAME | 215786-61E102 |
| SCALE | 3/8"=1'-0" |

SHEET **61E102**

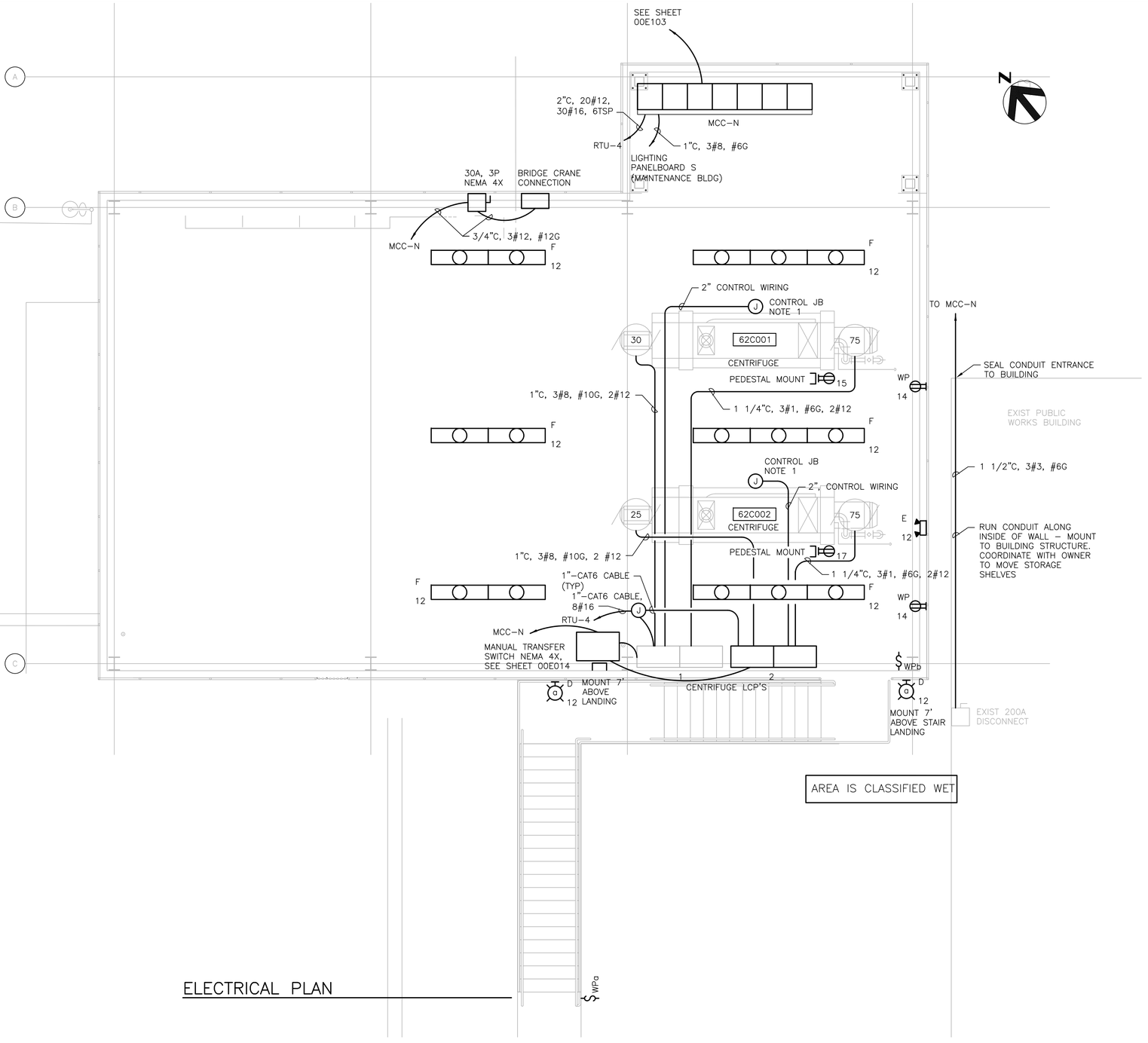


NOTES:

1. WIRE CENTRIFUGE CONTROLS TO JUNCTION BOX AND RUN CONTROL CONDUCTORS IN CONDUIT TO RESPECTIVE LCP.
2. MOUNT LIGHT FIXTURES IN DEWATERING AREA UNDER CEILING ABOVE BRIDGE CRANE.

## ELECTRICAL PLAN

FILE: 215786–61E103.dwg
DATE: Oct 07, 2015–4:52:18pm, rsnider

HDR Engineering, Inc.

| ISSUE | DATE | DESCRIPTION |
|---|---|---|
| A | JUNE 2015 | ISSUED FOR BID |

| | |
|---|---|
| PROJECT MANAGER | C. OLSON |
| DESIGNED | W.F. ETTLICH |
| DESIGNED | |
| CHECKED | L.D. SMITHEY |
| DRAWN | E.G. SESPENE |
| DATE | JUNE 30, 2015 |
| PROJECT NUMBER | 215786 |

REGISTERED PROFESSIONAL ENGINEER
WILLIAM F. ETTLICH
NO. 07625
EXP. 09/30/16
ELECTRICAL
STATE OF CALIFORNIA
06-30-15

CITY OF PINOLE CALIFORNIA 1903

PINOLE/HERCULES WATER POLLUTION CONTROL PLANT UPGRADE
CLIENT PN

**ELECTRICAL**

**SOLIDS HANDLING BUILDING SECOND FLOOR ELECTRICAL PLAN**

0 1" 2"

| | |
|---|---|
| FILENAME | 215786–61E103 |
| SCALE | 1/4"=1'–0" |

SHEET **61E103**

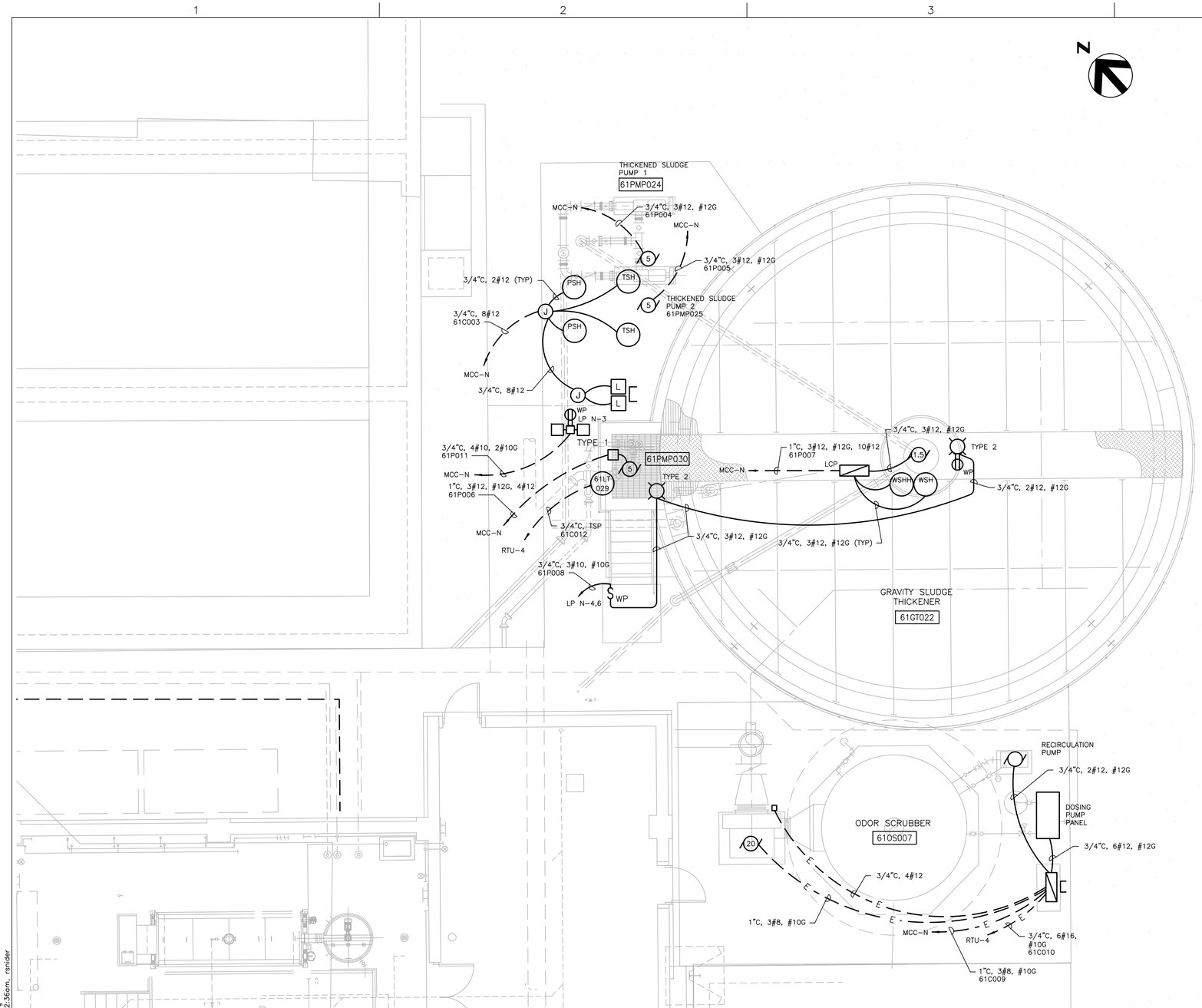


# ELECTRICAL PLAN

| ISSUE | DATE | DESCRIPTION |
|---|---|---|
| A | JUNE 2015 | ISSUED FOR BID |

| | |
|---|---|
| PROJECT MANAGER | C. OLSON |
| DESIGNED | W.F. ETTLICH |
| DESIGNED | |
| CHECKED | L.D. SMITHEY |
| DRAWN | E.G. SESPENE |
| DATE | JUNE 30, 2015 |
| PROJECT NUMBER | 215786 |

HDR Engineering, Inc.

REGISTERED PROFESSIONAL ENGINEER
WILLIAM F. ETTLICH
NO. 07625
EXP. 09/30/16
ELECTRICAL
STATE OF CALIFORNIA
06-30-15

CITY OF PINOLE CALIFORNIA 1903

PINOLE/HERCULES
WATER POLLUTION
CONTROL PLANT UPGRADE
CLIENT PN

**ELECTRICAL**

**GRAVITY SLUDGE THICKENER ELECTRICAL PLAN**

0 1" 2"

| | |
|---|---|
| FILENAME | 215786-61E104 |
| SCALE | 1"=5'-0" |

SHEET **61E104**

FILE: 215786-61E104.dwg
DATE: Oct 07, 2015-4:52:36am, ranider

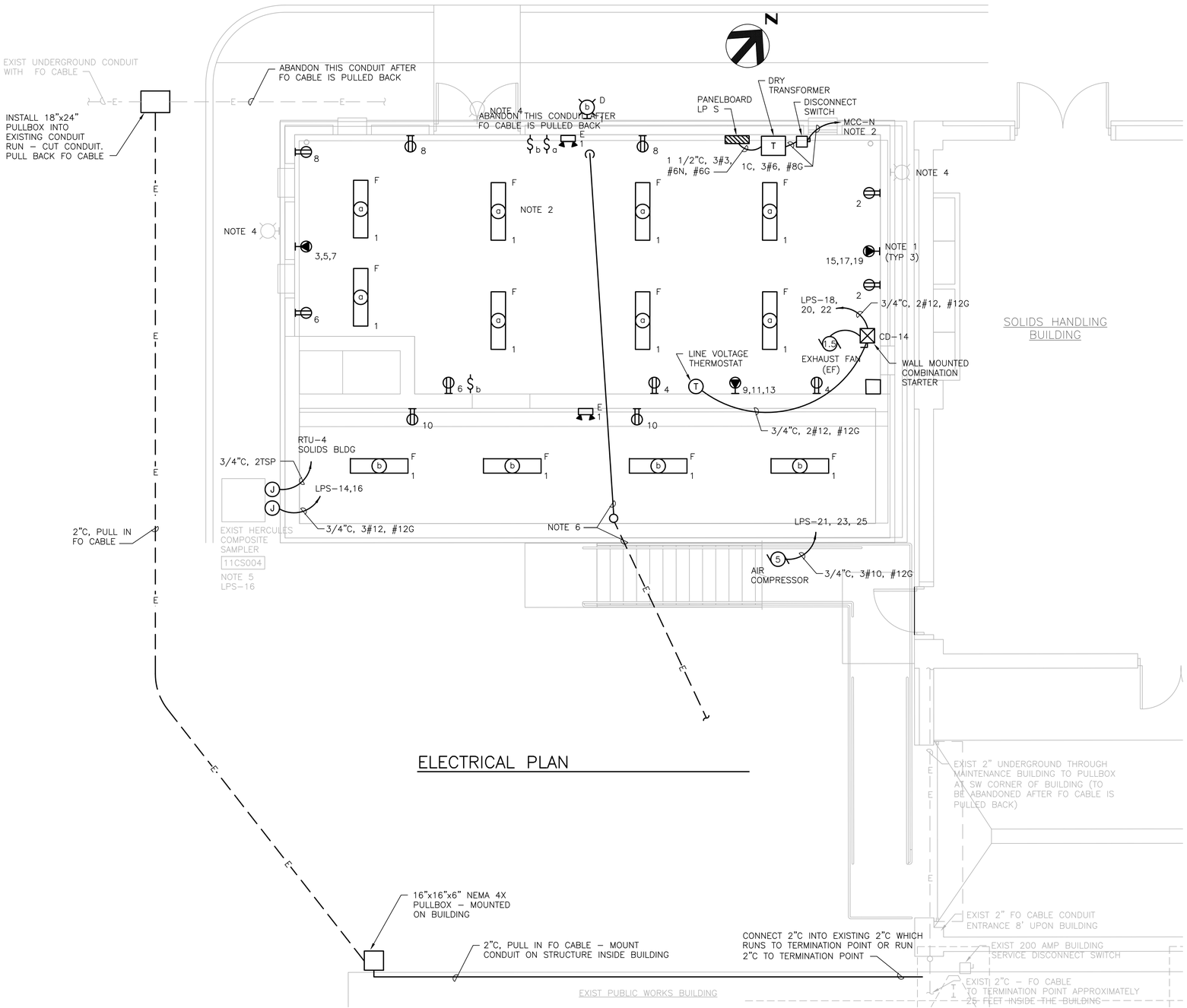


## ELECTRICAL PLAN

NOTES:

1. 20A, 3ø OUTLETS FOR 120/208V, 3ø WITH GROUND.
2. CONTRACTOR MAY REUSE EXISTING LIGHTING BOXES, CONDUITS AND SWITCHES.
3. LINE VOLTAGE COOLING THERMOSTAT.
4. REMOVE 3 EXISTING LIGHT FIXTURES AND CONDUITS ON BUILDING.
5. HERCULES AND PINOLE SEWERS COMPOSITE SAMPLERS SIGNAL AND POWER WIRING ARE TO BE EXTENDED AS SHOWN. PINOLE SAMPLER IS SHOWN ON SHEET 00E104 BUT POWER AND SIGNAL WIRING IS BROUGHT TO THE HERCULES SAMPLER.
6. RUN TEMPORARY 1 1/2"C, 3#3, #8G FROM DISCONNECT IN EXIST MCC–N TO SERVICE DISCONNECT IN EXISTING PUBLIC WORKS BUILDING FOR TEMPORARY SERVICE UNTIL PERMANENT SERVICE FROM MCC–N IS INSTALLED AND THEN REMOVE. SEE SHEET 00E014.
7. REMOVE ALL UNUSED EXISTING CONDUITS AND WIRE.

FILE: 215786–66E101.dwg
DATE: Oct 07, 2015–4:54:50am, rsnider

HDR Engineering, Inc.

| ISSUE | DATE | DESCRIPTION |
|---|---|---|
| A | JUNE 2015 | ISSUED FOR BID |

| | |
|---|---|
| PROJECT MANAGER | C. OLSON |
| | |
| DESIGNED | W. ETTLICH |
| DESIGNED | |
| CHECKED | L. SMITHEY |
| DRAWN | R. SNIDER |
| DATE | JUNE 30, 2015 |
| PROJECT NUMBER | 215786 |

REGISTERED PROFESSIONAL ENGINEER WILLIAM F. ETTLICH NO. 07625 EXP. 09/30/16 ELECTRICAL STATE OF CALIFORNIA 06-30-15

CITY OF PINOLE CALIFORNIA 1903

PINOLE/HERCULES WATER POLLUTION CONTROL PLANT UPGRADE CLIENT PN

**ELECTRICAL**

**MAINTENANCE BUILDING ELECTRICAL PLAN**

0 1" 2"

| | |
|---|---|
| FILENAME | 215786–66E101 |
| SCALE | 1/4"=1'–0" |

SHEET **66E101**

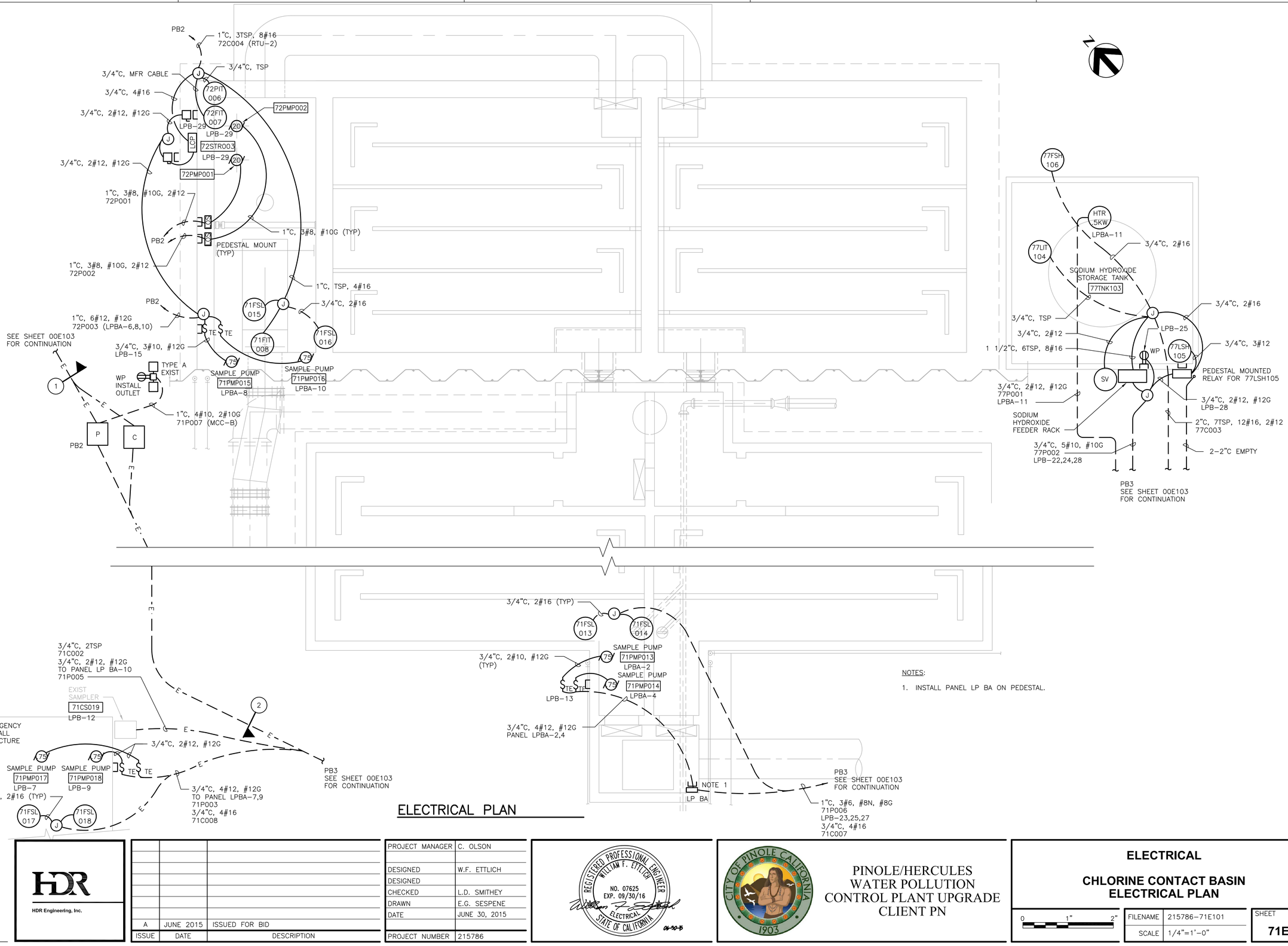


NOTES:

1. INSTALL PANEL LP BA ON PEDESTAL.

## ELECTRICAL PLAN

FILE: 215786-71E101.dwg
DATE: Oct 07, 2015-4:55:19pm, rsnider

HDR Engineering, Inc.

| ISSUE | DATE | DESCRIPTION |
|---|---|---|
| A | JUNE 2015 | ISSUED FOR BID |

| | |
|---|---|
| PROJECT MANAGER | C. OLSON |
| | |
| DESIGNED | W.F. ETTLICH |
| DESIGNED | |
| CHECKED | L.D. SMITHEY |
| DRAWN | E.G. SESPENE |
| DATE | JUNE 30, 2015 |
| | |
| PROJECT NUMBER | 215786 |

REGISTERED PROFESSIONAL ENGINEER
WILLIAM F. ETTLICH
NO. 07625
EXP. 09/30/16
ELECTRICAL
STATE OF CALIFORNIA
06-30-15

CITY OF PINOLE CALIFORNIA 1903

PINOLE/HERCULES
WATER POLLUTION
CONTROL PLANT UPGRADE
CLIENT PN

**ELECTRICAL**

**CHLORINE CONTACT BASIN ELECTRICAL PLAN**

0 1" 2"

| | |
|---|---|
| FILENAME | 215786-71E101 |
| SCALE | 1/4"=1'-0" |

SHEET **71E101**

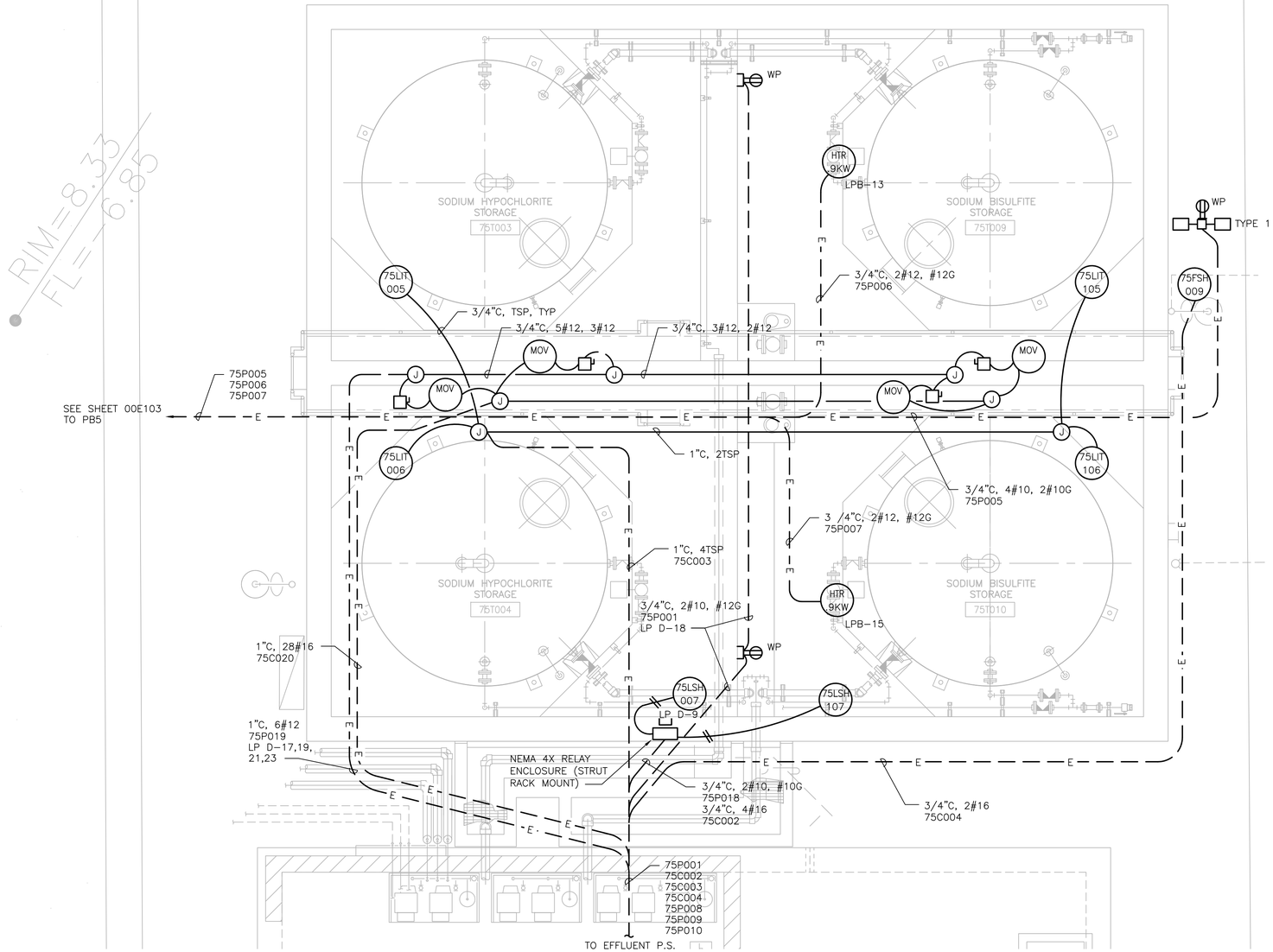


AREA IS WET

# ELECTRICAL PLAN 1

FILE: 215786-75E101.dwg
DATE: Oct 07, 2015-4:56:23am, rsnider

HDR Engineering, Inc.

| ISSUE | DATE | DESCRIPTION |
|---|---|---|
| A | JUNE 2015 | ISSUED FOR BID |

| | |
|---|---|
| PROJECT MANAGER | C. OLSON |
| DESIGNED | W.F. ETTLICH |
| DESIGNED | |
| CHECKED | L.D. SMITHEY |
| DRAWN | E.G. SESPENE |
| DATE | JUNE 30, 2015 |
| PROJECT NUMBER | 215786 |

REGISTERED PROFESSIONAL ENGINEER
THEODORE H. KONTOVERAS
NO. 29378
EXP. 06/30/17
MECHANICAL
STATE OF CALIFORNIA
06-30-15

CITY OF PINOLE CALIFORNIA 1903

PINOLE/HERCULES
WATER POLLUTION
CONTROL PLANT UPGRADE
CLIENT PN

**ELECTRICAL**

**CHEMICAL STORAGE ELECTRICAL PLAN 1**

0 1" 2"

| | |
|---|---|
| FILENAME | 215786-75E101 |
| SCALE | 3/8"=-1'-0" |

SHEET **75E101**

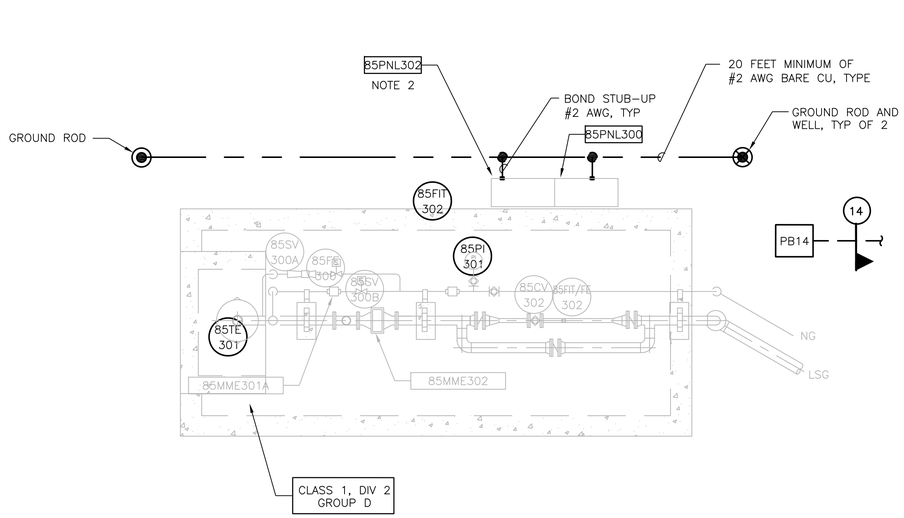


## ELECTRICAL PLAN

NOTES:

1. NOT ALL CONDUITS ARE SHOWN. SEE SINGLE LINE DIAGRAMS FOR CABLE AND CONDUIT REQUIREMENTS.
2. PROVIDE EQUIPMENT RACK, FACE ALL PANELS NORTH.
3. LOCATION OF EXISTING DUCT BANK IS APPROXIMATE. CONTRACTOR SHALL USE CAUTION WHEN EXCAVATING. ROUTE NEW DUCT BANK UNDER EXISTING DUCT BANK.
4. GROUND ALL METAL AND EXPOSED PIPES.
5. PRIOR TO DISASSEMBLY OF THE DIGESTER GAS FLARE SYSTEM THE CONTRACTOR SHALL AS-BUILT THE EXISTING SYSTEM INCLUDING ALL INTERCONNECTING AND FEEDER CONDUITS, WIRES AND NOTE ALL WIRE CONNECTION POINTS INCLUDING TERMINAL NUMBERS SO SYSTEM CAN BE REASSEMBLED AND WIRED AS IT WAS PRIOR TO DISASSEMBLY.

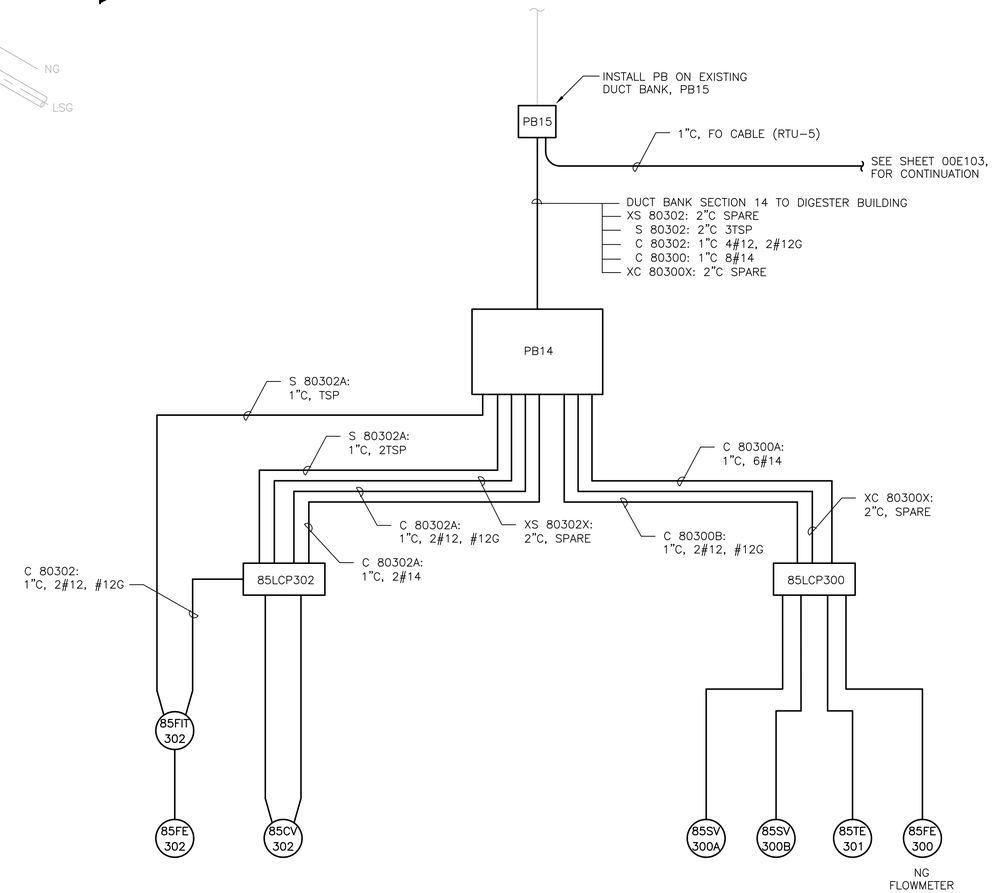


## DIGESTER GAS FLARE ELECTRICAL WIRING BLOCK DIAGRAM

SCALE: NTS

(BASED ON BEST AVAILABLE DRAWINGS)
CONTRACTOR IS TO AS-BUILT THE ELECTRICAL CONDUIT, WIRING AND TERMINAL CONNECTIONS FOR THE EXISTING FLARE SYSTEM PRIOR TO DISMANTELING. CONDUIT NUMBERS BASED ON ORIGINAL B & C DRAWINGS.

FILE: 215786-85E101.dwg
DATE: Oct. 07, 2015-5:00:41am, rsnider

HDR Engineering, Inc.

| ISSUE | DATE | DESCRIPTION |
|---|---|---|
| A | JUNE 2015 | ISSUED FOR BID |

| | |
|---|---|
| PROJECT MANAGER | C. OLSON |
| | |
| DESIGNED | W.F. ETTLICH |
| DESIGNED | |
| CHECKED | L.D. SMITHEY |
| DRAWN | E.G. SESPENE |
| DATE | JUNE 30, 2015 |
| | |
| PROJECT NUMBER | 215786 |

REGISTERED PROFESSIONAL ENGINEER
THEODORE H. KONTOKOSTAS
NO. 29378
EXP. 06/30/17
MECHANICAL
STATE OF CALIFORNIA
06-30-15

CITY OF PINOLE CALIFORNIA 1903

PINOLE/HERCULES
WATER POLLUTION
CONTROL PLANT UPGRADE
CLIENT PN

**ELECTRICAL**

**DIGESTER GAS BURNER ELECTRICAL PLAN**

0 1" 2"

| | |
|---|---|
| FILENAME | 215786-85E101 |
| SCALE | 3/8"=1'-0" |

SHEET **85E101**

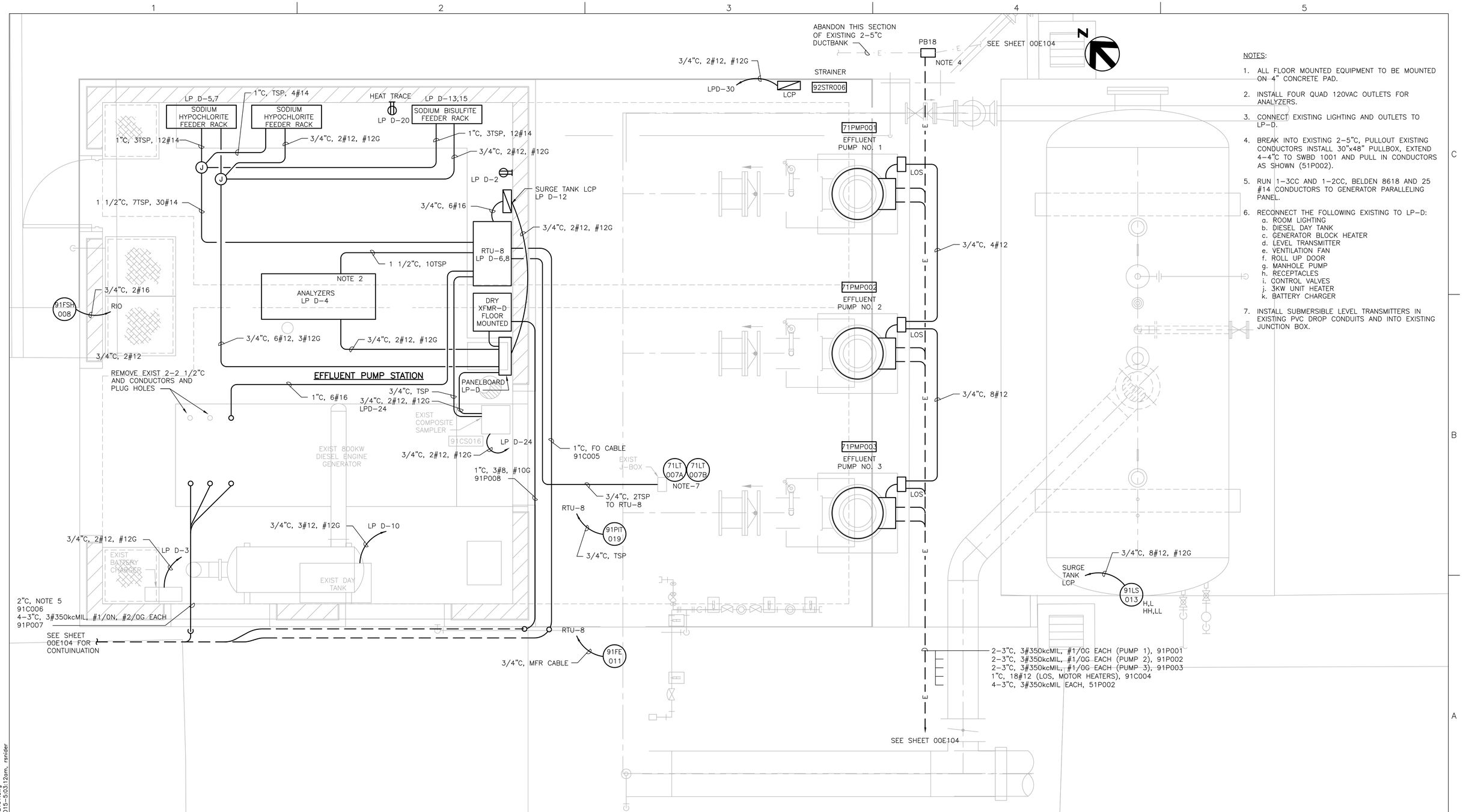


NOTES:

1. ALL FLOOR MOUNTED EQUIPMENT TO BE MOUNTED ON 4" CONCRETE PAD.
2. INSTALL FOUR QUAD 120VAC OUTLETS FOR ANALYZERS.
3. CONNECT EXISTING LIGHTING AND OUTLETS TO LP-D.
4. BREAK INTO EXISTING 2-5"C, PULLOUT EXISTING CONDUCTORS INSTALL 30"x48" PULLBOX, EXTEND 4-4"C TO SWBD 1001 AND PULL IN CONDUCTORS AS SHOWN (51P002).
5. RUN 1-3CC AND 1-2CC, BELDEN 8618 AND 25 #14 CONDUCTORS TO GENERATOR PARALLELING PANEL.
6. RECONNECT THE FOLLOWING EXISTING TO LP-D:
   a. ROOM LIGHTING
   b. DIESEL DAY TANK
   c. GENERATOR BLOCK HEATER
   d. LEVEL TRANSMITTER
   e. VENTILATION FAN
   f. ROLL UP DOOR
   g. MANHOLE PUMP
   h. RECEPTACLES
   i. CONTROL VALVES
   j. 3KW UNIT HEATER
   k. BATTERY CHARGER
7. INSTALL SUBMERSIBLE LEVEL TRANSMITTERS IN EXISTING PVC DROP CONDUITS AND INTO EXISTING JUNCTION BOX.

# ELECTRICAL PLAN

FILE: 215786-91E101.dwg
DATE: Oct 07, 2015-5:03:12am, rsnider

HDR Engineering, Inc.

| ISSUE | DATE | DESCRIPTION |
|---|---|---|
| A | JUNE 2015 | ISSUED FOR BID |

| | |
|---|---|
| PROJECT MANAGER | C. OLSON |
| DESIGNED | W.F. ETTLICH |
| DESIGNED | |
| CHECKED | L.D. SMITHEY |
| DRAWN | E.G. SESPENE |
| DATE | JUNE 30, 2015 |
| PROJECT NUMBER | 215786 |

REGISTERED PROFESSIONAL ENGINEER
THEODORE H. KONTOMYKAS
NO. 29378
EXP. 06/30/17
MECHANICAL
STATE OF CALIFORNIA
06-30-15

CITY OF PINOLE CALIFORNIA 1903

PINOLE/HERCULES
WATER POLLUTION
CONTROL PLANT UPGRADE
CLIENT PN

**ELECTRICAL**

**EFFLUENT PUMP STATION ELECTRICAL PLAN**

0 1" 2"

| | |
|---|---|
| FILENAME | 215786-91E101 |
| SCALE | 1/2"=1'-0" |

SHEET **91E101**

# INSTRUMENT SYMBOLOGY

- LOCALLY MOUNTED FIELD INSTRUMENTATION
- MOUNTED ON PANEL FRONT
- MOUNTED INSIDE PANEL
- FRONT PANEL MOUNTED ON AUXILIARY PANEL (SUBSCRIPT INDICATES PANEL)
- MOUNTED INSIDE AUXILIARY PANEL
- PILOT LIGHT
- INSTRUMENT FUNCTIONS SHARING COMMON HOUSING
- COMPLEX INTERLOCK AS DEFINED IN CONTROL DIAGRAM OR IN SPECIFICATIONS
- SHARED DISPLAY, SHARED CONTROL, FIELD MOUNTED
- SHARED DISPLAY, SHARED CONTROL AT PRIMARY LOCATION – NORMALLY ACCESSIBLE TO OPERATOR (SCADA WORKSTATION)
- SHARED DISPLAY, SHARED CONTROL AT AUXILLIARY LOCATION – NORMALLY ACCESSIBLE TO OPERATOR (IPC, HMI)
- PROGRAMMABLE LOGIC CONTROL, PRIMARY LOCATION – NORMALLY INACCESSIBLE TO OPERATOR

# PRIMARY ELEMENT SYMBOLOGY

- MAGNETIC FLOWMETER
- FLUME
- TEMPERATURE ELEMENT WITH THERMOWELL
- SIGHT FLOW GLASS
- CHEMICAL SEAL
- SUBMERSIBLE PUMP
- PROGRESSIVE CAVITY PUMP
- CENTRIFUGAL PUMP
- VERTICAL TURBINE PUMP
- METERING PUMP
- GATE

# INSTRUMENT IDENTIFICATION LETTERS

| | FIRST LETTER | | SUCCEEDING LETTERS | | |
|---|---|---|---|---|---|
| | MEASURED OR INITIATING VARIABLE | MODIFIER | READOUT OR PASSIVE FUNCTION | OUTPUT FUNCTION | MODIFIER |
| A | ANALYSIS | | ALARM | | |
| B | BURNER, COMBUSTION | | | | |
| C | | | | CONTROL | CLOSED |
| D | | DIFFERENTIAL | | | |
| E | VOLTAGE | | SENSOR (PRIMARY ELEMENT) | | |
| F | FLOW RATE | RATIO (FRACTION) | | | |
| G | | | GLASS, VIEWING DEVICE | | |
| H | HAND | | | | HIGH |
| I | CURRENT (ELECTRICAL) | | INDICATE | | |
| J | POWER | SCAN | | | |
| K | TIME, TIME SCHEDULE | TIME; RATE OF CHANGE | | CONTROL STATION | |
| L | LEVEL | | LIGHT | | LOW |
| M | | MOMENTARY | | | MIDDLE, INTERMEDIATE |
| N | | | | | |
| O | | | ORIFICE, RESTRICTION | | |
| P | PRESSURE, VACUUM | | POINT (TEST) CONNECTION | | |
| Q | QUANTITY | INTEGRATE, TOTALIZE | | | |
| R | RADIATION | | RECORD | | |
| S | SPEED, FREQUENCY | SAFETY | | SWITCH | |
| T | TEMPERATURE | | | TRANSMIT | |
| U | MULTIVARIABLE | | MULTIFUNCTION | MULTIFUNCTION | MULTIFUNCTION |
| V | VIBRATION, MECH. ANALYSIS | | | VALVE DAMPER, LOUVER | |
| W | WEIGHT, FORCE | | WELL | | |
| X | | X–AXIS | | | |
| Y | EVENT, STATE OR PRESENCE | Y–AXIS | | RELAY, COMPUTE, CONVERT | |
| Z | POSITION, DIMENSION | Z–AXIS | | DRIVER, ACTUATOR UNCLASSIFIED FINAL CONTROL ELEMENT | |

# ACTUATOR SYMBOLOGY

- OPERATOR ABBREVIATIONS: M = MOTOR, P = PNEUMATIC, S = SOLENOID
- FLOAT OPERATOR
- SPRING–OPPOSED SINGLE–ACTING PNEUMATIC CYLINDER
- DOUBLE–ACTING PNEUMATIC CYLINDER
- PNEUMATIC DIAPHRAGM
- PNEUMATIC DIAPHRAGM WITH POSITIONER

# TYPES OF POWER SUPPLY

| | |
|---|---|
| A | PLANT COMPRESSED AIR |
| IA | INSTRUMENT AIR |
| ES | ELECTRICAL SUPPLY |
| NG | NATURAL GAS |
| HYD | HYDRAULIC |
| AC | 120VAC POWER |
| 480 | 480VAC POWER |
| DC | 24VDC POWER |

# PLC INTERFACES

- ANALOG INPUT (4–20mA DC)
- ANALOG OUTPUT (4–20mA DC)
- DISCRETE INPUT (24VDC)
- DISCRETE OUTPUT (DRY CONTACT 120VAC)

# CONTROL SWITCH NOTATION ABBREVIATIONS

XXX

| | |
|---|---|
| ACK | ACKNOWLEDGE |
| ESTOP | EMERGENCY STOP |
| FAIL | FAILURE |
| FOR | FORWARD–OFF–REVERSE |
| FR | FORWARD–REVERSE |
| FS | FAST–SLOW |
| HA | HAND–AUTO |
| HOA | HAND–OFF–AUTO |
| HOR | HAND–OFF–REMOTE |
| HSE | EMERGENCY STOP |
| LL | LEAD–LAG |
| LLS | LEAD–LAG–STANDBY |
| LOR | LOCAL–OFF–REMOTE |
| LR | LOCAL–REMOTE |
| LS | LEAD–STANDBY |
| MA | MANUAL–AUTO |
| OAC | OPEN–AUTO–CLOSE |
| OC | OPEN–CLOSE |
| OO | ON–OFF |
| OSC | OPEN–STOP–CLOSE |
| RJ | RUN–JOG |
| RJR | RUN–JOG–REVERSE |
| SIL | SILENCE |

# VALVE AND GATE SYMBOLOGY

- AIR–RELEASE VACUUM VALVE; ARV = AIR RELEASE VALVE; VAC = VACUUM
- BV – BALL VALVE
- BFV – BUTTERFLY VALVE
- CNV – CONE VALVE
- CV – CHECK VALVE
- DDCV – DOUBLE–DISK CHECK VALVE
- BCV – BALL CHECK VALVE
- DV – DIAPHRAGM VALVE
- GV – GATE VALVE
- GLV – GLOBE VALVE
- KGV – KNIFE GATE VALVE
- NV – NEEDLE VALVE
- PNV – PINCH VALVE
- PV – PLUG VALVE
- PRV – PRESSURE–REDUCING VALVE
- PRV – PRESSURE–REGULATING VALVE
- OR PRV – PRESSURE–RELIEF VALVE
- TWCV – THREE–WAY CONTROL VALVE
- Y–STRAINER
- FLEX COUPLING
- DRAIN
- SOLENOID VALVE
- ROTAMETER WITH BALL INDICATOR AND FLOW ADJUSTMENT

# PROCESS AND INSTRUMENTATION ABBREVIATIONS

| | |
|---|---|
| 3W | CHLORINATED PLANT WATER |
| 4W | NON–CHLORINATED PLANT WATER |
| ABI | AERATION BASIN INFLUENT |
| AI | ANALOG INPUT |
| AO | ANALOG OUTPUT |
| BNR | BIOLOGICAL NITROGEN REMOVAL |
| BSCR | BANDSCREEN |
| BYP | BYPASS |
| CA | COMPRESSED AIR |
| CHEMD | CHEMICAL DRAIN |
| CL2 | CHLORINE (ANALYZER MODIFIER) |
| CLS | CHLORINE SOLUTION |
| CMP | COMPACTOR |
| CND | CONDENSER |
| COND | CONDUCTIVITY (ANALYZER MODIFIER) |
| CS | CONTACT STABILIZATION |
| CSL | CAUSTIC SOLUTION |
| CW | CITY WATER |
| D | DRAIN |
| DEN | DENSITY |
| DG | DIGESTER GAS |
| DI | DIGITAL INPUT |
| DO | DIGITAL OUTPUT |
| DO | DISSOLVED OXYGEN (ANALYZER MODIFIER) |
| DS | DIGESTED SLUDGE |
| E/P | VOLTAGE TO PNEUMATIC |
| FA | FOUL AIR |
| FECL3 | FERRIC CHLORIDE |
| FE | FILTER EFFLUENT |
| FF | FILTER FEED |
| FO | FUEL OIL |
| FW | FEED WATER |
| GR | GRIT |
| GTSL | GRAVITY THICKENED SLUDGE |
| HPA | HIGH PRESSURE AIR |
| HW | HOT WATER |
| HWR | HOT WATER RETURN |
| HWS | HOT WATER SUPPLY |
| I/O | INPUT/OUTPUT |
| I/P | CURRENT TO PNEUMATIC |
| IA | INSTRUMENT AIR |
| LCP | LOCAL CONTROL PANEL |
| LO | LUBE OIL |
| LOX | LIQUID OXYGEN |
| LPA | LOW PRESSURE AIR |
| LPDG | LOW PRESSURE DIGESTER AIR |
| LSG | LOW PRESSURE SLUDGE GAS |
| MA | MURIATIC ACID |
| ML | MIXED LIQUOR |
| MXR | MIXER |
| N2 | NITROGEN GAS |
| NC | NORMALLY CLOSE |
| NG | NATURAL GAS |
| NO | NORMALLY OPEN |
| OF | OVERFLOW |
| OF | OVERFLOW |
| OG | OFF GAS |
| OI | OPERATOR INTERFACE |
| P&ID | PROCESS AND INSTRUMENTATION DIAGRAM |
| PD | PLANT DRAIN |
| PE | PRIMARY EFFLUENT |
| PERM | PERMEATE |
| PI | PRIMARY INFLUENT |
| PSC | PRIMARY SCUM |
| PMP | PUMP |
| POL | POLYMER |
| POTW | POTABLE WATER |
| PS | PRIMARY SLUDGE |
| PW | PLANT WATER |
| RAS | RETURN ACTIVATED SLUDGE |
| REC | RECIRCULATION |
| RS | RAW SEWAGE |
| RW | RECLAIMED WATER |
| SAM | SAMPLE |
| SBS | SODIUM BISULFATE |
| SC | SCUM |
| SCR | SCREENINGS |
| SD | SANITARY DRAIN |
| SE | SECONDARY EFFLUENT |
| SEW | SEWER |
| SHC | SODIUM HYPOCHLORITE |
| SI | SECONDARY INFLUENT |
| SLG | SLIDE GATE, SLUICE GATE |
| SN | SUPERNATANT |
| SO | SLOPE OIL |
| SOD | SLOPE OIL DRAIN |
| SS | SUSPENDED SOLIDS (ANALYZER MODIFIER) |
| SWR | SOFTENED WATER |
| T | TANK |
| TS | THICKENED SLUDGE |
| TURB | TURBIDITY (ANALYZER MODIFIER) |
| TWAS | THICKENED WASTE ACTIVATED SLUDGE |
| V | VENT |
| WAS | WASTE ACTIVATED SLUDGE |
| WW | WASH WATER |

# LINE TYPES

- MAIN PROCESS LINE
- SECONDARY PROCESS LINE
- AUXILIARY PROCESS LINE
- DIRECTION OF FLOW
- PNEUMATIC SIGNAL
- ELECTRICAL SIGNAL
- 480V POWER
- HYDRAULIC SIGNAL
- SOFTWARE OR DATA LINK
- SIGNAL CONNECTION
- CROSSOVER – NO CONNECTION
- CAPILLARY
- MECHANICAL LINK
- ETHERNET I/O DATA LINK
- DEVICENET DATA LINK
- SERIAL RS232 LINK
- FIBER OPTIC

# CROSS REFERENCE SYMBOLOGY

- SEQUENCE NUMBER; CONTINUATION FROM DRAWING XXIXXX
- SEQUENCE NUMBER; CONTINUATION TO DRAWING XXIXXX

# GENERAL NOTES

1. THIS IS A STANDARD INSTRUMENTATION SYMBOLOGY AND ABBREVIATIONS SHEET. LISTING OF SYMBOLS AND ABBREVIATIONS DOES NOT IMPLY ALL SYMBOLS AND ABBREVIATIONS HAVE BEEN USED ON THIS PROJECT.
2. SEE PROCESS, MECHANICAL AND PLUMBING LEGEND DRAWINGS FOR MISCELLANEOUS PIPING SYMBOLS.
3. SCREENING OR SHADING OF WORK IS USED TO INDICATE EXISTING COMPONENTS OR TO DE–EMPHASIZE PROPOSED IMPROVEMENTS TO HIGHLIGHT SELECTED TRADE WORK. REFER TO CONTEXT OF EACH DRAWING FOR USAGE.
4. VALVE SYMBOLS SHOWN HERE ARE APPLICABLE ONLY TO INSTRUMENTATION DIAGRAMS. SEE PROCESS, MECHANICAL AND PLUMBING LEGEND SHEET FOR VALVE SYMBOLS USED ELSEWHERE ON THE DRAWINGS.

FILE: 215786–001001.dwg
DATE: Oct 07, 2015–4:27:59pm, rsnider

HDR Engineering, Inc.

| ISSUE | DATE | DESCRIPTION |
|---|---|---|
| A | JUNE–2015 | ISSUED FOR BID |

| | |
|---|---|
| PROJECT MANAGER | C. OLSON |
| DESIGNED | W.F. ETTLICH |
| DESIGNED | |
| CHECKED | L.D. SMITHEY |
| DRAWN | E.G. SESPENE |
| DATE | JUNE 30, 2015 |
| PROJECT NUMBER | 215786 |

REGISTERED PROFESSIONAL ENGINEER — WILLIAM F. ETTLICH — NO. 07625 — EXP. 09/30/16 — ELECTRICAL — STATE OF CALIFORNIA — 06-30-15

CITY OF PINOLE CALIFORNIA 1903

PINOLE/HERCULES WATER POLLUTION CONTROL PLANT UPGRADE
CLIENT PN

**INSTRUMENTATION**

**PROCESS AND INSTRUMENTATION DIAGRAM SYMBOLS LEGEND AND ABBREVIATIONS**

0 1" 2"

| | |
|---|---|
| FILENAME | 215786–001001 |
| SCALE | NTS |
| SHEET | 00I001 |

NOTES:

1. TERMINATE ALL FO CABLE FIBERS AT BOTH ENDS.

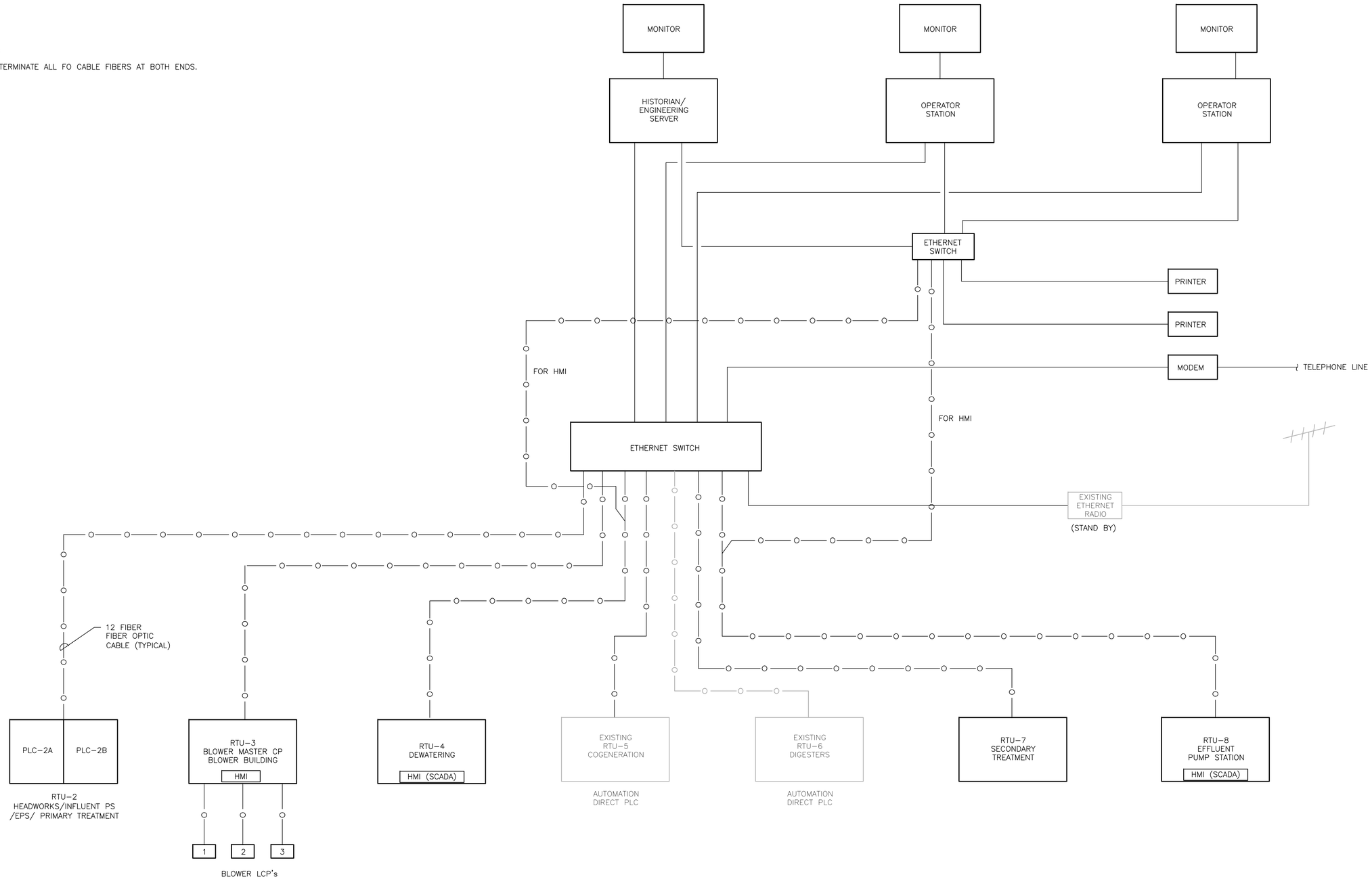


FILE: 215786-001006.dwg
DATE: Oct 07, 2015-4:28:09am, rsnider

HDR Engineering, Inc.

| ISSUE | DATE | DESCRIPTION |
|---|---|---|
| A | JUNE 2015 | ISSUED FOR BID |

| | |
|---|---|
| PROJECT MANAGER | C. OLSON |
| | |
| DESIGNED | W.F. ETTLICH |
| DESIGNED | |
| CHECKED | L.D. SMITHEY |
| DRAWN | E.G. SESPENE |
| DATE | JUNE 30, 2015 |
| | |
| PROJECT NUMBER | 215786 |

REGISTERED PROFESSIONAL ENGINEER
WILLIAM F. ETTLICH
NO. 07625
EXP. 09/30/16
ELECTRICAL
STATE OF CALIFORNIA
06-30-15

CITY OF PINOLE CALIFORNIA 1903

PINOLE/HERCULES
WATER POLLUTION
CONTROL PLANT UPGRADE
CLIENT PN

**INSTRUMENTATION**

**PROCESS AND INSTRUMENTATION DIAGRAM SCADA BLOCK DIAGRAM**

0 1" 2"

| | |
|---|---|
| FILENAME | 215786-00I006 |
| SCALE | NTS |

SHEET **00I006**

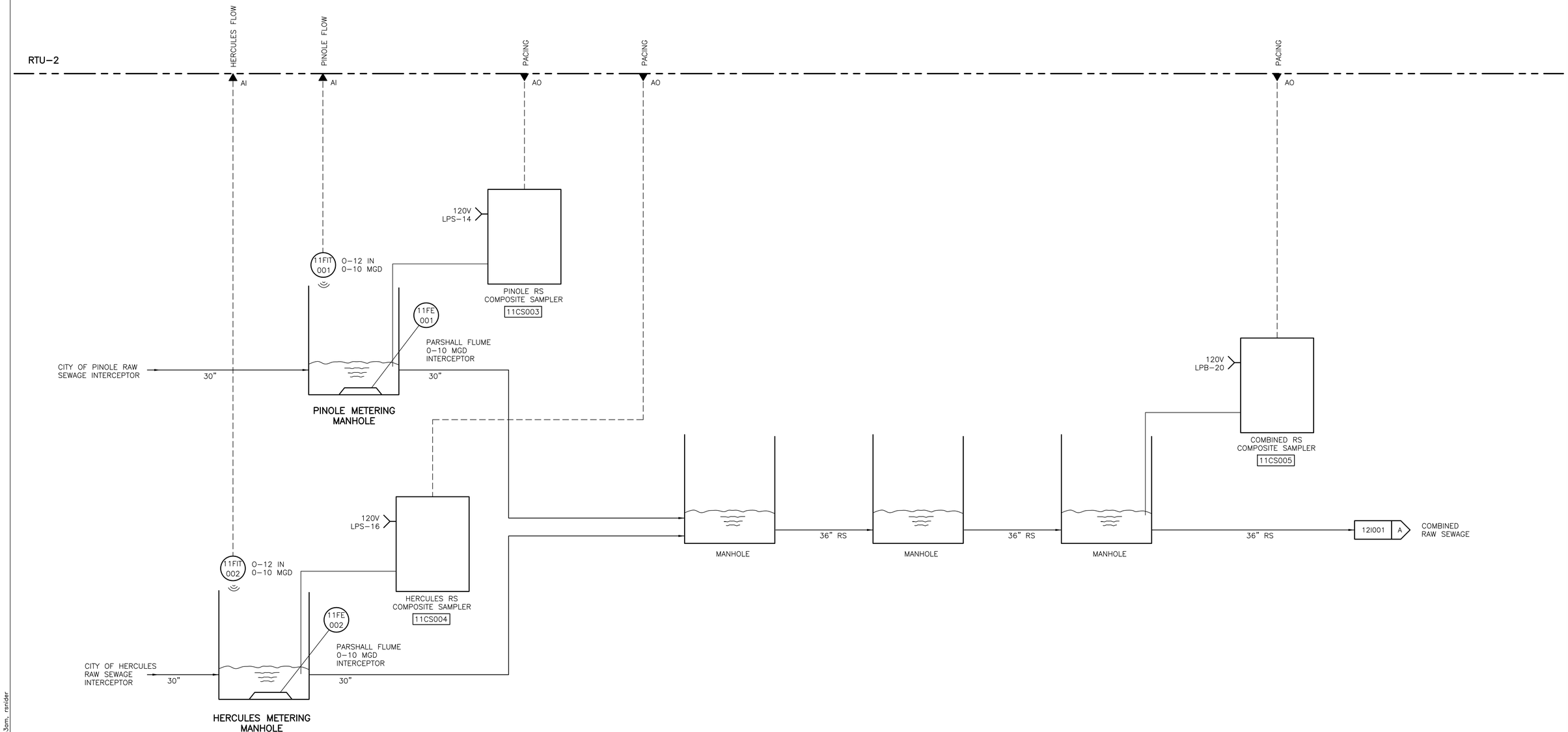


FILE: 215786-11I101.dwg
DATE: Oct 07, 2015-4:30:53pm, renider

HDR Engineering, Inc.

| ISSUE | DATE | DESCRIPTION |
|---|---|---|
| A | JUNE 2015 | ISSUED FOR BID |

| | |
|---|---|
| PROJECT MANAGER | C. OLSON |
| | |
| DESIGNED | W.F. ETTLICH |
| DESIGNED | |
| CHECKED | L.D. SMITHEY |
| DRAWN | E.G. SESPENE |
| DATE | JUNE 30, 2015 |
| | |
| PROJECT NUMBER | 215786 |

REGISTERED PROFESSIONAL ENGINEER
WILLIAM F. ETTLICH
NO. 07625
EXP. 09/30/16
ELECTRICAL
STATE OF CALIFORNIA
06-30-15

CITY OF PINOLE CALIFORNIA 1903

PINOLE/HERCULES
WATER POLLUTION
CONTROL PLANT UPGRADE
CLIENT PN

**INSTRUMENTATION**

**PROCESS AND INSTRUMENTATION DIAGRAM**
**RAW SEWAGE FLOW**

0 1" 2"

| | |
|---|---|
| FILENAME | 215786-11I101 |
| SCALE | NTS |

SHEET
**11I101**

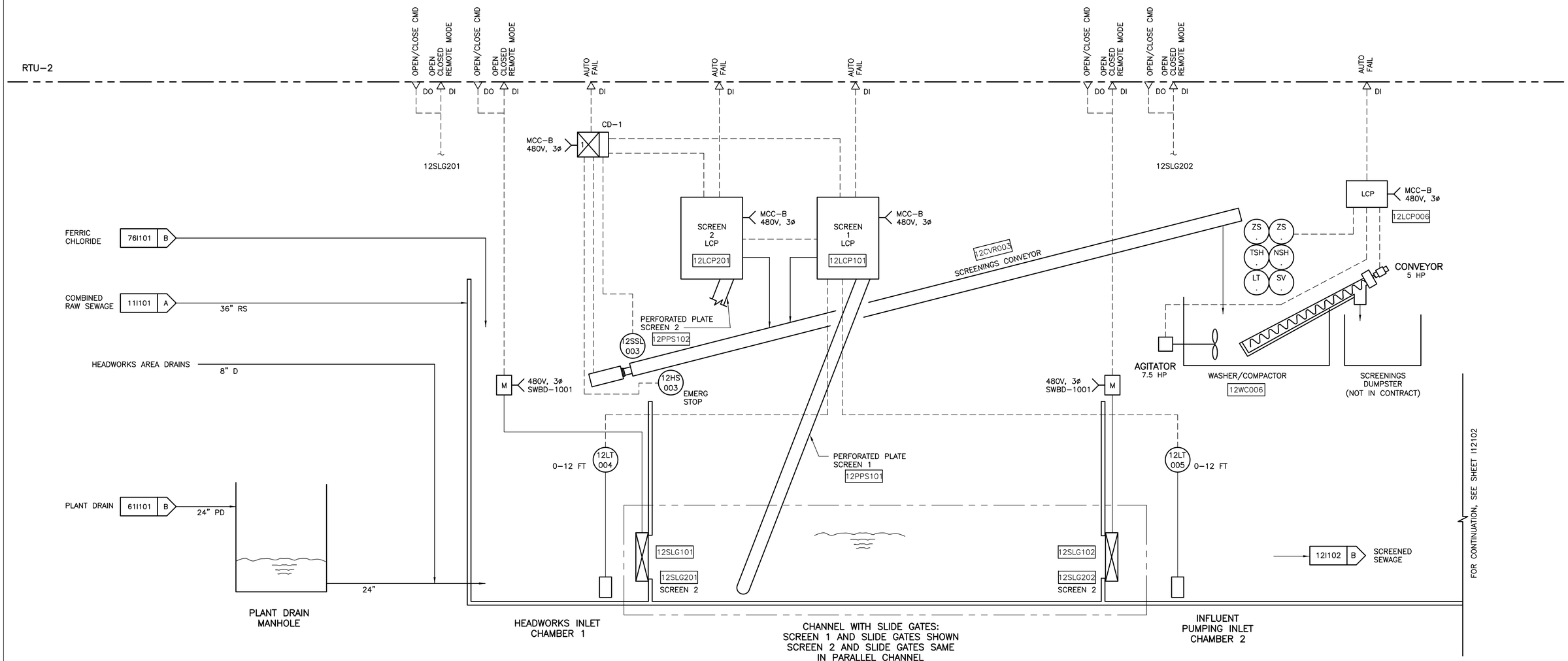


FILE: 215786–12I101.dwg
DATE: Oct 07, 2015–4:31:58pm, rsnider

HDR Engineering, Inc.

| ISSUE | DATE | DESCRIPTION |
|---|---|---|
| A | JUNE 2015 | ISSUED FOR BID |

| | |
|---|---|
| PROJECT MANAGER | C. OLSON |
| | |
| DESIGNED | W.F. ETTLICH |
| DESIGNED | |
| CHECKED | L.D. SMITHEY |
| DRAWN | E.G. SESPENE |
| DATE | JUNE 30, 2015 |
| | |
| PROJECT NUMBER | 215786 |

REGISTERED PROFESSIONAL ENGINEER
WILLIAM F. ETTLICH
NO. 07625
EXP. 09/30/16
ELECTRICAL
STATE OF CALIFORNIA

CITY OF PINOLE CALIFORNIA 1903

PINOLE/HERCULES
WATER POLLUTION
CONTROL PLANT UPGRADE
CLIENT PN

**INSTRUMENTATION**

**PROCESS AND INSTRUMENTATION DIAGRAM**
**RAW SEWAGE SCREENING**

0 1" 2"

| | |
|---|---|
| FILENAME | 215786–12I101 |
| SCALE | NTS |

SHEET **12I101**

RTU–2

OPEN DI
CLOSED DI
OPEN DI
CLOSED DI

WETWELL 1A HIGH LEVEL DI
WETWELL 1A LOW LEVEL DI
WETWELL 1A LEVEL AI
SPEED CMD AO
START/STOP DO
AUTO RUN FAIL DI
SPEED AI
SPEED CMD AO
START/STOP DO
AUTO RUN FAIL DI
SPEED AI

VFD 480V, 3ø
MCC–B CD–2 CD–13
VFD 480V, 3ø
MCC–B CD–2 CD–13

WETWELL 1B HIGH LEVEL DI
WETWELL 1B LOW LEVEL DI
WETWELL 1B LEVEL AI
SPEED CMD AO
START/STOP DO
AUTO RUN FAIL DI
SPEED AI
SPEED CMD AO
START/STOP DO
AUTO RUN FAIL DI
SPEED AI

VFD 480V, 3ø
MCC–B CD–2 CD–13
VFD 480V, 3ø
MCC–B CD–2 CD–13

12LT 312
0–16 FT

12LSL 313
12LSH 313

18" RS 13I101 E
TO GRIT REMOVAL
18" RS 13I101 F

SET: EL103

TSH .
MSH .
TSH .
MSH .

SET: EL

480V, 3ø M
M 480V, 3ø

12LT 310
0–16 FT

12LSL 311
12LSH 311

18" RS 13I101 C
TO GRIT REMOVAL
18" RS 13I101 D

12SLG204
12SLG203

SCREENED SEWAGE 12I101 B

SET: EL103

TSH .
MSH .
TSH .
MSH .

SET: EL

FOR CONTINUATION, SEE SHEET 12I101

INFLUENT PUMP 1 60 HP 12PMP301
INFLUENT PUMP 2 60 HP 12PMP302

INFLUENT PUMPING INLET CHAMBER 2

INFLUENT PUMPING WETWELL 1A

INFLUENT PUMP 3 60 HP 12PMP303
INFLUENT PUMP 4 60 HP 12PMP304

INFLUENT PUMPING WETWELL 1B

FILE: 215786–12I102.dwg
DATE: Oct 07, 2015–4:32:04pm, rsnider

HDR Engineering, Inc.

| ISSUE | DATE | DESCRIPTION |
|---|---|---|
| A | JUNE 2015 | ISSUED FOR BID |

| | |
|---|---|
| PROJECT MANAGER | C. OLSON |
| DESIGNED | W.F. ETTLICH |
| DESIGNED | |
| CHECKED | L.D. SMITHEY |
| DRAWN | E.G. SESPENE |
| DATE | JUNE 30, 2015 |
| PROJECT NUMBER | 215786 |

REGISTERED PROFESSIONAL ENGINEER WILLIAM F. ETTLICH NO. 07625 EXP. 09/30/16 ELECTRICAL STATE OF CALIFORNIA 06-30-15

CITY OF PINOLE CALIFORNIA 1903

PINOLE/HERCULES
WATER POLLUTION
CONTROL PLANT UPGRADE
CLIENT PN

**INSTRUMENTATION**

**PROCESS AND INSTRUMENTATION DIAGRAM INFLUENT PUMP STATION**

0 1" 2"

| FILENAME | 215786–12I102 |
|---|---|
| SCALE | NTS |

SHEET **12I102**

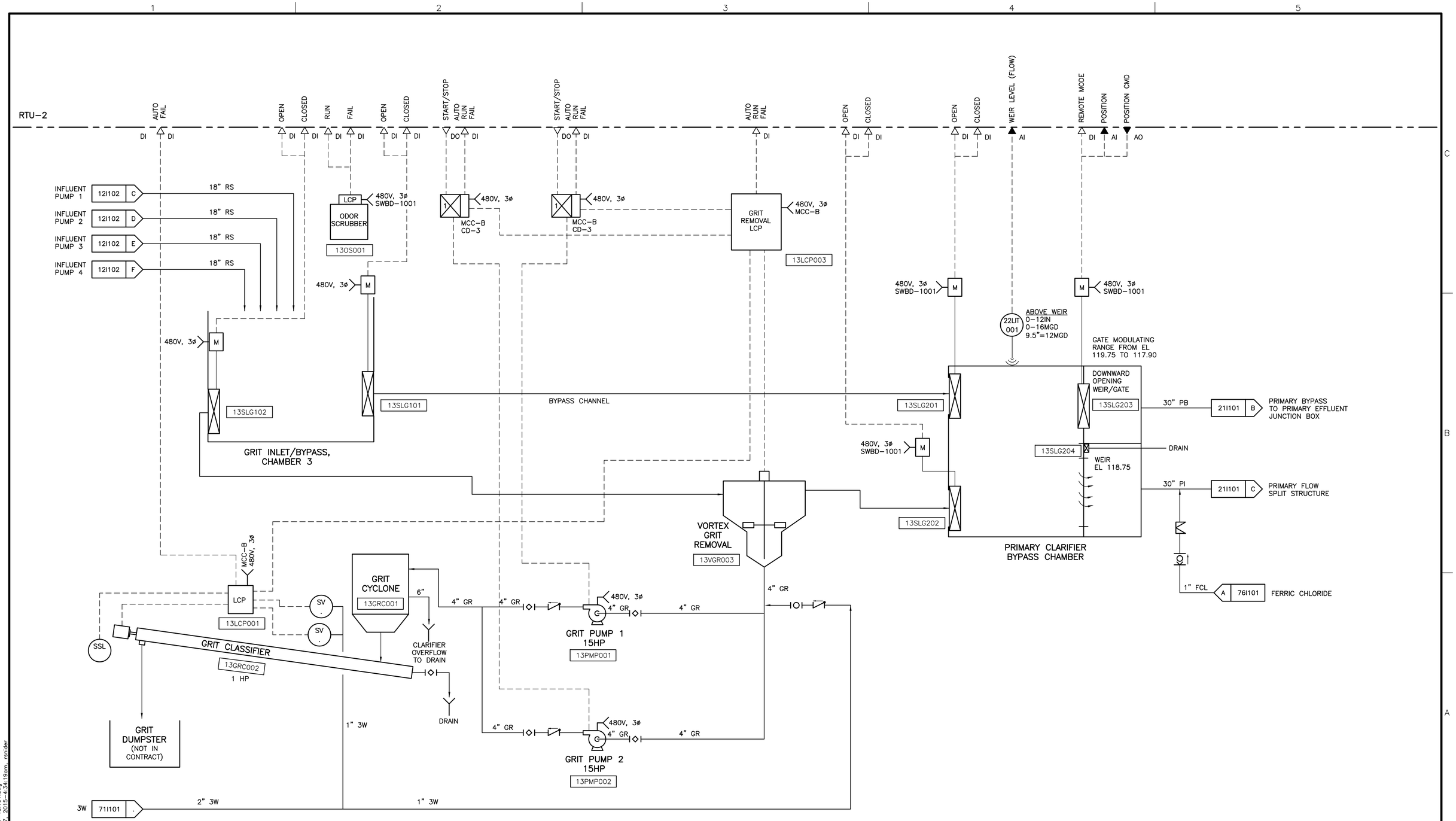


FILE: 215786-13I101.dwg
DATE: Oct 07, 2015-4:34:19pm, rsnider

HDR Engineering, Inc.

| ISSUE | DATE | DESCRIPTION |
|---|---|---|
| A | JUNE 2015 | ISSUED FOR BID |

| | |
|---|---|
| PROJECT MANAGER | C. OLSON |
| DESIGNED | W.F. ETTLICH |
| DESIGNED | |
| CHECKED | L.D. SMITHEY |
| DRAWN | E.G. SESPENE |
| DATE | JUNE 30, 2015 |
| PROJECT NUMBER | 215786 |

REGISTERED PROFESSIONAL ENGINEER
WILLIAM F. ETTLICH
NO. 07625
EXP. 09/30/16
ELECTRICAL
STATE OF CALIFORNIA
06-30-15

CITY OF PINOLE CALIFORNIA 1903

PINOLE/HERCULES
WATER POLLUTION
CONTROL PLANT UPGRADE
CLIENT PN

**INSTRUMENTATION**

**PROCESS AND INSTRUMENTATION DIAGRAM GRIT REMOVAL**

0 1" 2"

| | |
|---|---|
| FILENAME | 215786-13I101 |
| SCALE | NTS |

SHEET **13I101**

RTU-2

START/STOP CMD
RUN FAIL REMOTE
DO
DI

PRIMARY INLET/ BYPASS CHAMBER 4
13I101 C
30" PI
22SLG002
22SLG001
30" PI
22SLG003
EXIST PRIMARY FLOW SPLIT STRUCTURE

18" PI

CD-4
21LCP001
1
480V, 3ø
MCC-B CD-4
21WSH 001
21WSHP 001
24" PE
6" PSC
14" PI
24" PI
6"PSL
EXIST PRIMARY CLARIFIER 1
1 1/2 HP
21C001

25I101 D PRIMARY CLARIFIER 1 SLUDGE
23I101 E PRIMARY CLARIFIER 1 SCUM

CD-4
21LCP002
1
480V, 3ø
MCC-B CD-4
21WSH 002
21WSHP 002
24" PE
6" PSC
36" PI
24" PI
6" PSL
EXIST PRIMARY CLARIFIER 2
1 1/2 HP
21C002

23I101 F PRIMARY CLARIFIER 2 SCUM
25I101 G PRIMARY CLARIFIER 2 SLUDGE

CD-4
21LCP003
1
480V, 3ø
MCC-B CD-4
21WSH 003
21WSHP 003
24" PE
6" PSC
6" PSL
PRIMARY CLARIFIER 3
1 1/2 HP
21C003

1" SHO
A 77I101 SODIUM HYDROXIDE

42" PE
32I101 A PRIMARY EFFLUENT
PRIMARY EFFLUENT JUNCTION BOX (PRIMARY COMPARTMENT)

PRIMARY BYPASS
13I101 B
30" PB

23I101 I PRIMARY CLARIFIER 3 SCUM
25I101 H PRIMARY CLARIFIER 3 SLUDGE

FILE: 215786-21I101.dwg
DATE: Oct 07, 2015-4:41:01am, ranider

HDR Engineering, Inc.

| ISSUE | DATE | DESCRIPTION |
|---|---|---|
| A | JUNE 2015 | ISSUED FOR BID |

| | |
|---|---|
| PROJECT MANAGER | C. OLSON |
| DESIGNED | W.F. ETTLICH |
| DESIGNED | |
| CHECKED | L.D. SMITHEY |
| DRAWN | E.G. SESPENE |
| DATE | JUNE 30, 2015 |
| PROJECT NUMBER | 215786 |

REGISTERED PROFESSIONAL ENGINEER
WILLIAM F. ETTLICH
NO. 07625
EXP. 09/30/16
ELECTRICAL
STATE OF CALIFORNIA
06-30-15

CITY OF PINOLE CALIFORNIA 1903

PINOLE/HERCULES
WATER POLLUTION
CONTROL PLANT UPGRADE
CLIENT PN

**INSTRUMENTATION**

**PROCESS AND INSTRUMENTATION DIAGRAM**
**PRIMARY CLARIFICATION**

0 1" 2"

| | |
|---|---|
| FILENAME | 215786-21I101 |
| SCALE | NTS |

SHEET
**21I101**

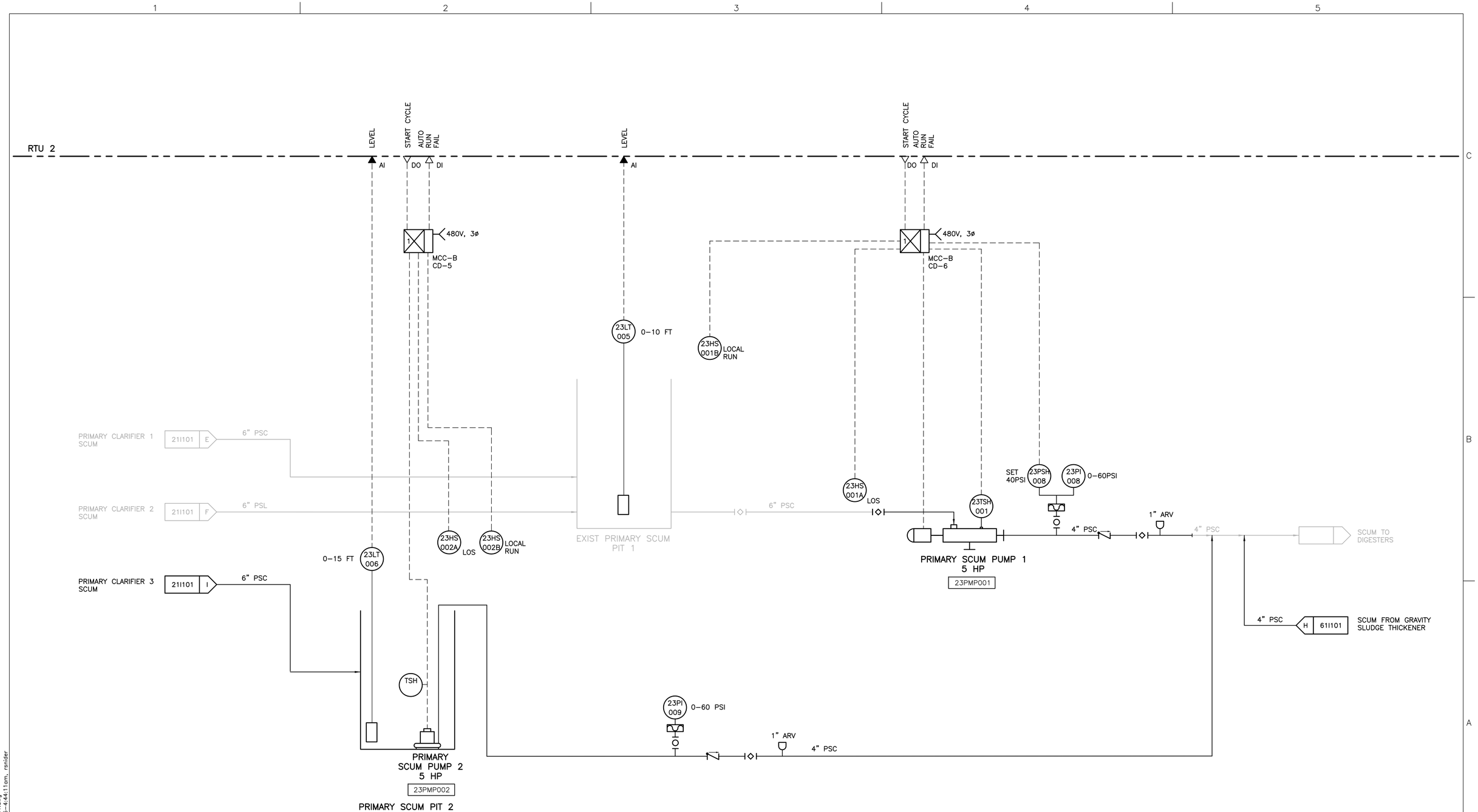


FILE: 215786–23I101.dwg
DATE: Oct 07, 2015–4:44:11am, rsnider

HDR Engineering, Inc.

| ISSUE | DATE | DESCRIPTION |
|---|---|---|
| A | JUNE 2015 | ISSUED FOR BID |

| | |
|---|---|
| PROJECT MANAGER | C. OLSON |
| DESIGNED | W.F. ETTLICH |
| DESIGNED | |
| CHECKED | L.D. SMITHEY |
| DRAWN | E.G. SESPENE |
| DATE | JUNE 30, 2015 |
| PROJECT NUMBER | 215786 |

REGISTERED PROFESSIONAL ENGINEER
WILLIAM F. ETTLICH
NO. 07625
EXP. 09/30/16
ELECTRICAL
STATE OF CALIFORNIA
06-30-15

CITY OF PINOLE CALIFORNIA 1903

PINOLE/HERCULES
WATER POLLUTION
CONTROL PLANT UPGRADE
CLIENT PN

**INSTRUMENTATION**

**PROCESS AND INSTRUMENTATION DIAGRAM**
**PRIMARY SCUM PUMPING**

0 1" 2"

| | |
|---|---|
| FILENAME | 215786–23I101 |
| SCALE | NTS |

SHEET **23I101**

RTU–2

START/STOP CMD
AUTO
RUN
FAIL
DO
DI

480V, 3ø
MCC–B
CD–3

25PI 007 0–60PSI
25HS 001 LOS
6" PSL
4" PSL
PRIMARY SLUDGE PUMP 1
20 HP
25PMP001

PRIMARY CLARIFIER 1 SLUDGE
211101 D
6" PSL
N.O.
PRIMARY CLARIFIER 2 SLUDGE
211101 D
6" PSL

25PI 008 0–60PSI
25HS 002 LOS
6" PSL
4" PSL
PRIMARY SLUDGE PUMP 2
20 HP
25PMP002

4" PSL
611101 A
TO GRAVITY THICKENING

PRIMARY CLARIFIER 3 SLUDGE
211101 H
6" PSL

25PI 009 0–60PSI
25HS 003 LOS
6" PSL
4" PSL
PRIMARY SLUDGE PUMP 3
20 HP
25PMP003

25PI 010 0–60PSI
25HS 004 LOS
6" PSL
4" PSL
PRIMARY SLUDGE PUMP 4
20 HP
25PMP004

FILE: 215786–25I101.dwg
DATE: Oct 07, 2015–4:44:17am, rsnider

HDR Engineering, Inc.

| ISSUE | DATE | DESCRIPTION |
|---|---|---|
| A | JUNE 2015 | ISSUED FOR BID |

| | |
|---|---|
| PROJECT MANAGER | C. OLSON |
| DESIGNED | W.F. ETTLICH |
| DESIGNED | |
| CHECKED | L.D. SMITHEY |
| DRAWN | E.G. SESPENE |
| DATE | JUNE 30, 2015 |
| PROJECT NUMBER | 215786 |

REGISTERED PROFESSIONAL ENGINEER
WILLIAM F. ETTLICH
NO. 07625
EXP. 09/30/16
ELECTRICAL
STATE OF CALIFORNIA
06-30-15

CITY OF PINOLE CALIFORNIA 1903

PINOLE/HERCULES
WATER POLLUTION
CONTROL PLANT UPGRADE
CLIENT PN

**INSTRUMENTATION**

**PROCESS AND INSTRUMENTATION DIAGRAM**
**PRIMARY SLUDGE PUMPING**

0 1" 2"

| | |
|---|---|
| FILENAME | 215786–25I101 |
| SCALE | NTS |

SHEET
**25I101**

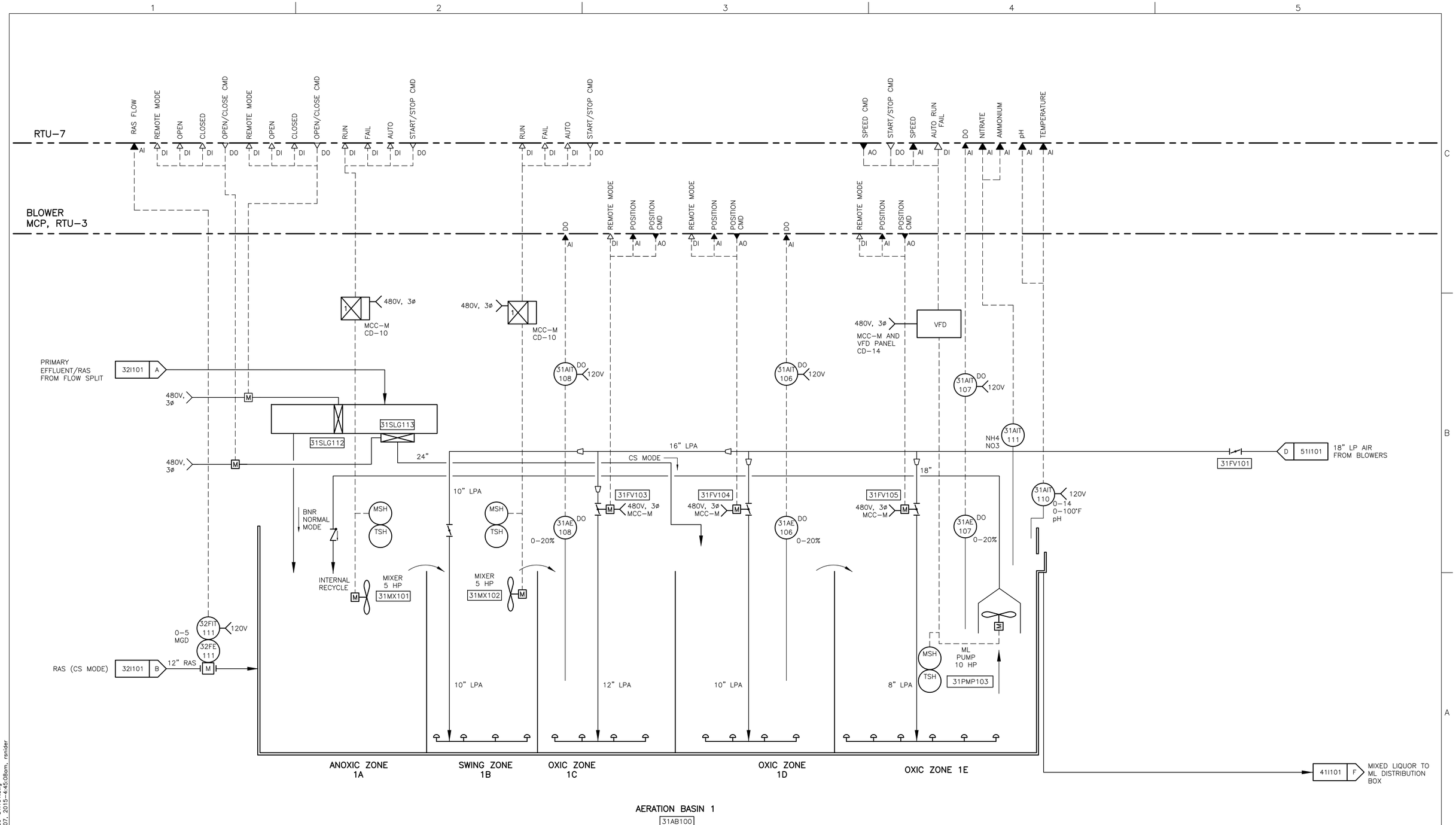


FILE: 215786-31I101.dwg
DATE: Oct 07, 2015-4:45:08am, rsnider

HDR Engineering, Inc.

| ISSUE | DATE | DESCRIPTION |
|---|---|---|
| A | JUNE 2015 | ISSUED FOR BID |

| | |
|---|---|
| PROJECT MANAGER | C. OLSON |
| DESIGNED | W.F. ETTLICH |
| DESIGNED | |
| CHECKED | L.D. SMITHEY |
| DRAWN | E.G. SESPENE |
| DATE | JUNE 30, 2015 |
| PROJECT NUMBER | 215786 |

REGISTERED PROFESSIONAL ENGINEER
WILLIAM F. ETTLICH
NO. 07625
EXP. 09/30/16
ELECTRICAL
STATE OF CALIFORNIA

CITY OF PINOLE CALIFORNIA 1903

PINOLE/HERCULES
WATER POLLUTION
CONTROL PLANT UPGRADE
CLIENT PN

**INSTRUMENTATION**

**PROCESS AND INSTRUMENTATION DIAGRAM AERATION BASIN 1**

0 1" 2"

| | |
|---|---|
| FILENAME | 215786-31I101 |
| SCALE | NTS |

SHEET **31I101**

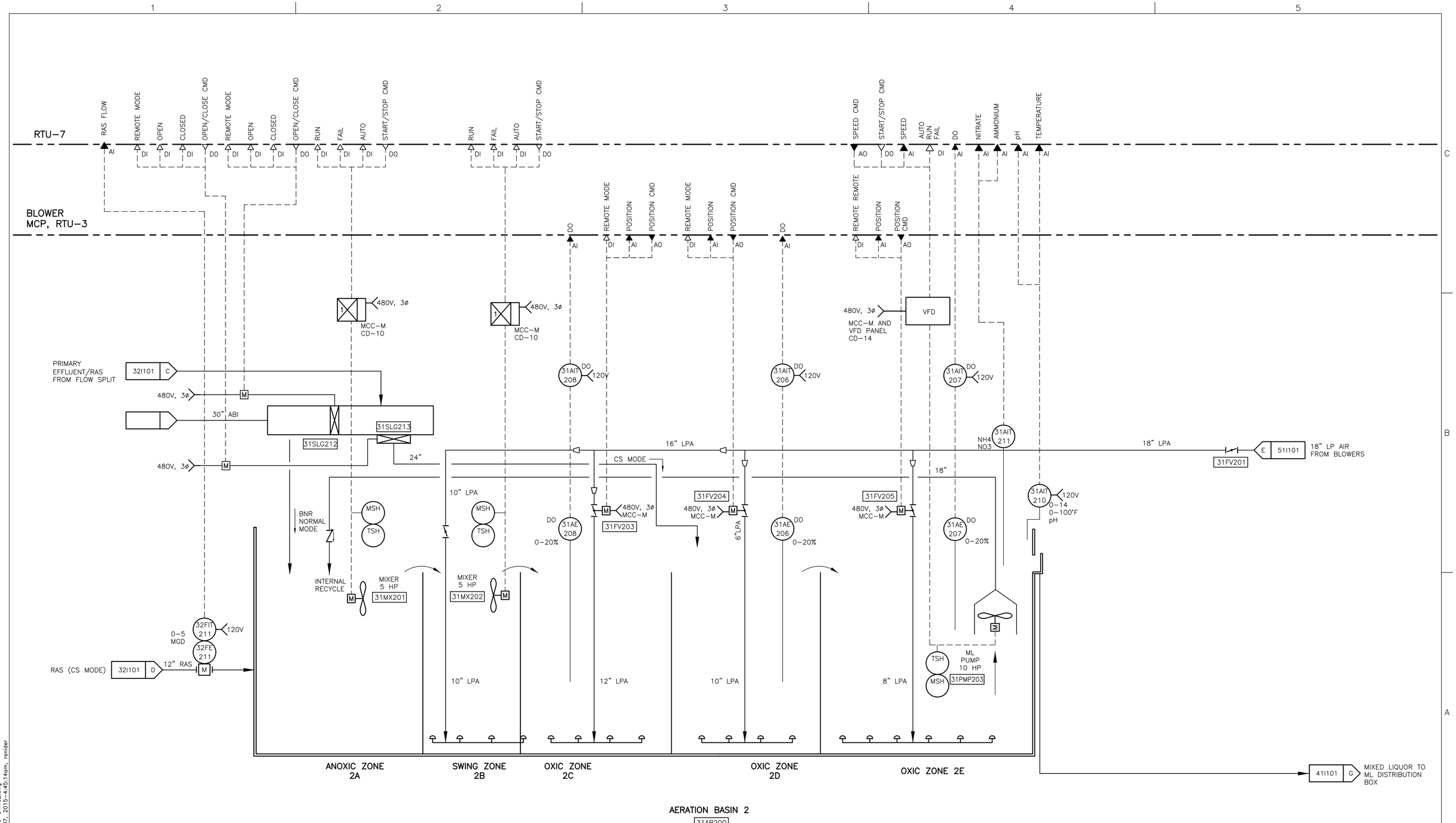


AERATION BASIN 2
31AB200

FILE: 215786-31I102.dwg
DATE: Oct 07, 2015-4:45:14pm, rsnider

HDR Engineering, Inc.

| ISSUE | DATE | DESCRIPTION |
|---|---|---|
| A | JUNE 2015 | ISSUED FOR BID |

| | |
|---|---|
| PROJECT MANAGER | C. OLSON |
| DESIGNED | W.F. ETTLICH |
| DESIGNED | |
| CHECKED | L.D. SMITHEY |
| DRAWN | E.G. SESPENE |
| DATE | JUNE 30, 2015 |
| PROJECT NUMBER | 215786 |

REGISTERED PROFESSIONAL ENGINEER
WILLIAM F. ETTLICH
NO. 07625
EXP. 09/30/16
ELECTRICAL
STATE OF CALIFORNIA
06-30-15

CITY OF PINOLE CALIFORNIA 1903

PINOLE/HERCULES
WATER POLLUTION
CONTROL PLANT UPGRADE
CLIENT PN

**INSTRUMENTATION**

**PROCESS AND INSTRUMENTATION DIAGRAM AERATION BASIN 2**

0 1" 2"

| | |
|---|---|
| FILENAME | 215786-31I102 |
| SCALE | NTS |

SHEET **31I102**

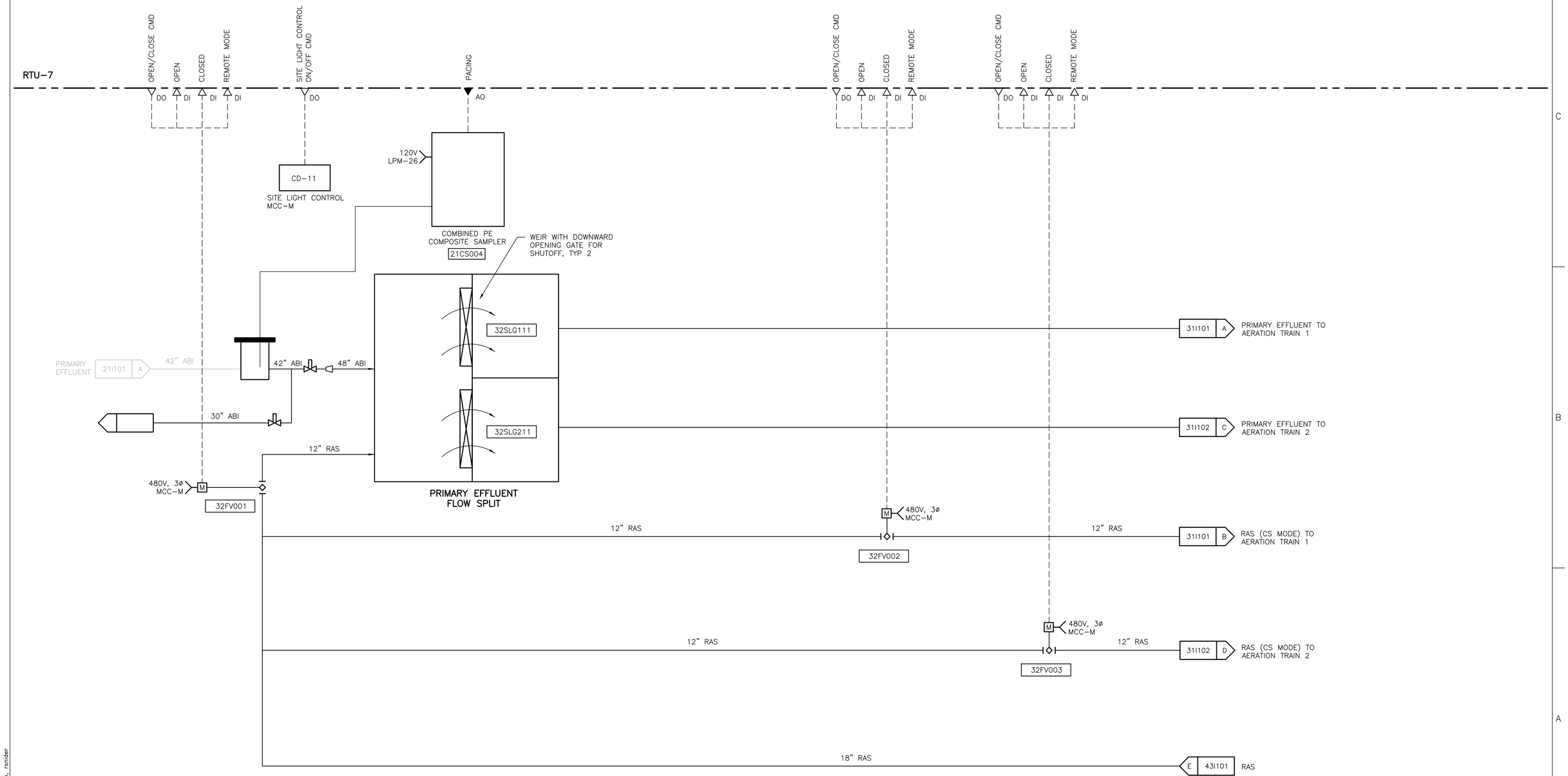


FILE: 215786-32I101.dwg
DATE: Oct 07, 2015-4:46:47am, rsnider

HDR Engineering, Inc.

| ISSUE | DATE | DESCRIPTION |
|---|---|---|
| A | JUNE 2015 | ISSUED FOR BID |

| | |
|---|---|
| PROJECT MANAGER | C. OLSON |
| DESIGNED | W.F. ETTLICH |
| DESIGNED | |
| CHECKED | L.D. SMITHEY |
| DRAWN | E.G. SESPENE |
| DATE | JUNE 30, 2015 |
| PROJECT NUMBER | 215786 |

REGISTERED PROFESSIONAL ENGINEER
WILLIAM F. ETTLICH
NO. 07625
EXP. 09/30/16
ELECTRICAL
STATE OF CALIFORNIA
09-30-15

CITY OF PINOLE CALIFORNIA 1903

PINOLE/HERCULES
WATER POLLUTION
CONTROL PLANT UPGRADE
CLIENT PN

**INSTRUMENTATION**

**PROCESS AND INSTRUMENTATION DIAGRAM**
**PRIMARY EFFLUENT AND RAS FLOW SPLIT**

0 1" 2"

| | |
|---|---|
| FILENAME | 215786-32I101 |
| SCALE | AS NOTED |

SHEET **32I101**

RTU-7

START/STOP CMD — DO
FAIL — DI
RUN — DI
AUTO — DI

START/STOP CMD — DO
RUN
FAIL
REMOTE — DI

START/STOP CMD — DO
RUN
FAIL
REMOTE — DI

480V, 3ø
MCC-M
CD-4
41LCP 001
41WSHP 001
41WSHP 001

STOP PLATES USED TO ISOLATE EACH CLARIFIER

SC1
SC2
SC3
SC4
SC5

30" ML
30" ML
36" ML

1" 3W
36" SE
6" SC
12" RAS

41I102 H — SECONDARY EFFLUENT
12I101 B — SCUM TO PLANT DRAIN
42I101 D — RAS TO PUMPING

SECONDARY CLARIFIER 1
1 HP
41C001

31SLG11S
31SLG21S

1 — 31I101 F
2 — 31I102 G

MIXED LIQUOR FROM AERATION TRAINS

MIXED LIQUOR SPLIT BOX

480V, 3ø
MCC-M
LCP

3"LPA

CHANNEL AERATION BLOWER
10 HP
32B001

480V, 3ø
MCC-M
CD-4
41LCP 002
41WSHP 002
41WSHP 002

1" 3W
2" 3W
C — 71I101 3W

36" SE
6" SC
12" RAS

41I102 I — SECONDARY EFFLUENT
12I101 B — SCUM TO PLANT DRAIN
42I101 E — RAS TO PUMPING

36" ML

SECONDARY CLARIFIER 2
1 HP
41C002

MIXED LIQUOR TO SECONDARY CLARIFIER 5 — C — 41I102 — 24" ML

MIXED LIQUOR TO SECONDARY CLARIFIER 4 — B — 41I102 — 24" ML

MIXED LIQUOR TO SECONDARY CLARIFIER 3 — A — 41I102 — 24" ML

FILE: 215786-41I101.dwg
DATE: Oct 07, 2015-4:48:09pm, rsnider

HDR Engineering, Inc.

| ISSUE | DATE | DESCRIPTION |
|---|---|---|
| A | JUNE 2015 | ISSUED FOR BID |

| | |
|---|---|
| PROJECT MANAGER | C. OLSON |
| | |
| DESIGNED | W.F. ETTLICH |
| DESIGNED | |
| CHECKED | L.D. SMITHEY |
| DRAWN | E.G. SESPENE |
| DATE | JUNE 30, 2015 |
| | |
| PROJECT NUMBER | 215786 |

REGISTERED PROFESSIONAL ENGINEER
WILLIAM F. ETTLICH
NO. 07625
EXP. 09/30/16
ELECTRICAL
STATE OF CALIFORNIA

CITY OF PINOLE CALIFORNIA 1903

PINOLE/HERCULES
WATER POLLUTION
CONTROL PLANT UPGRADE
CLIENT PN

**INSTRUMENTATION**

**PROCESS AND INSTRUMENTATION DIAGRAM**
**SECONDARY CLARIFICATION 1**

0 1" 2"

| | |
|---|---|
| FILENAME | 215786-41I101 |
| SCALE | NTS |

SHEET **41I101**

RTU-7

START/STOP CMD
RUN
FAIL
REMOTE
DO
DI

PACING
AO

480V, 3ø
MCC-M
CD-4

CD-4
41LCP 003
41WSH 003
41WSHR 003

MIXED LIQUOR TO SECONDARY CLARIFIER NO. 3
41I101 A
24" ML

24" SE
6" SC
8" RAS

SECONDARY CLARIFIER 3
1/2 HP
41C003

12I101 B SCUM TO PLANT DRAIN
42I103 D RAS TO PUMPING

MIXED LIQUOR TO SECONDARY CLARIFIER NO. 4
41I101 B
24" ML

CD-4
41LCP 004
41WSH 004
41WSHR 004

SECONDARY CLARIFIER 4
1/2 HP
41C004

MIXED LIQUOR TO SECONDARY CLARIFIER NO. 5
41I101 C
24" ML

SECONDARY CLARIFIER 5
1 HP
41C005

120V
LPM-24
PRE-CHLORINATION COMPOSITE SAMPLER
41CS006

42" SE
H 41I101 SECONDARY CLARIFIER NO. 1 EFFLUENT
I 41I101 SECONDARY CLARIFIER NO. 2 EFFLUENT
SECONDARY EFFLUENT JUNCTION MANHOLE
71I101 J SECONDARY EFFLUENT TO CHLORINATION
12I101 B SCUM TO PLANT DRAIN
42I103 E RAS TO PUMPING

CD-4
41LCP 005
41WSH 005
41WSHR 005

24" SE
6" SC
8" RAS
12I101 B SCUM TO PLANT DRAIN
42I102 F RAS TO PUMPING

FILE: 215786-41I102.dwg
DATE: Oct 07, 2015-4:48:15am, rsnider

HDR Engineering, Inc.

| ISSUE | DATE | DESCRIPTION |
|---|---|---|
| A | JUNE 2015 | ISSUED FOR BID |

| | |
|---|---|
| PROJECT MANAGER | C. OLSON |
| DESIGNED | W.F. ETTLICH |
| DESIGNED | |
| CHECKED | L.D. SMITHEY |
| DRAWN | E.G. SESPENE |
| DATE | JUNE 30, 2015 |
| PROJECT NUMBER | 215786 |

REGISTERED PROFESSIONAL ENGINEER
WILLIAM F. ETTLICH
NO. 07625
EXP. 09/30/16
ELECTRICAL
STATE OF CALIFORNIA
06-30-15

CITY OF PINOLE CALIFORNIA 1903

PINOLE/HERCULES
WATER POLLUTION
CONTROL PLANT UPGRADE
CLIENT PN

**INSTRUMENTATION**

**PROCESS AND INSTRUMENTATION DIAGRAM**
**SECONDARY CLARIFICATION 2**

0 1" 2"

| | |
|---|---|
| FILENAME | 215786-41I102 |
| SCALE | NTS |

SHEET
**41I102**

RTU-7

SPEED AO | START/STOP CMD DO | AUTO RUN FAIL DI | SPEED CMD AI

VFD 480V, 3ø — MCC-M AND VFD PANEL CD-14

RAS FLOW AI | RAS FLOW AI

SECONDARY CLARIFIER NO. 1 RAS — 41I101 D — 12" RAS

SECONDARY CLARIFIER NO. 4 RAS — 41I103 A — 8" RAS

SECONDARY CLARIFIER NO. 2 RAS — 41I101 E — 12" RAS

SECONDARY CLARIFIER NO. 3 RAS — 41I103 B — 8" RAS

42HS 003 LOS — 42PI 010 — RAS PUMP 3, 10 HP — 42PMP003

42HS 004 LOS — 42PI 011 — RAS PUMP 4, 10 HP — 42PMP004

42HS 001 LOS — 42PI 008 — RAS PUMP 1, 10 HP — 42PMP001

42HS 002 LOS — 42PI 009 — RAS PUMP 2, 10 HP — 42PMP002

12" RAS

42FIT 005 120V

42FIT 006 120V

42FE 005 M 0-4 MGD — 12" RAS — 43I101 F — TO COMBINED RAS

42FE 006 M 0-4 MGD — 12" RAS — 43I101 G — TO COMBINED RAS

FILE: 215786-42I101.dwg
DATE: Oct 07, 2015-4:49:04am, rsnider

HDR Engineering, Inc.

| ISSUE | DATE | DESCRIPTION |
|---|---|---|
| A | JUNE 2015 | ISSUED FOR BID |

| | |
|---|---|
| PROJECT MANAGER | C. OLSON |
| DESIGNED | W.F. ETTLICH |
| DESIGNED | |
| CHECKED | L.D. SMITHEY |
| DRAWN | E.G. SESPENE |
| DATE | JUNE 30, 2015 |
| PROJECT NUMBER | 215786 |

REGISTERED PROFESSIONAL ENGINEER — WILLIAM F. ETTLICH — NO. 07625 EXP. 09/30/16 — ELECTRICAL — STATE OF CALIFORNIA — 06-30-15

CITY OF PINOLE CALIFORNIA 1903

PINOLE/HERCULES
WATER POLLUTION
CONTROL PLANT UPGRADE
CLIENT PN

**INSTRUMENTATION**

**PROCESS AND INSTRUMENTATION DIAGRAM**
**RAS PUMPING STRUCTURE 1**

0 1" 2"

| | |
|---|---|
| FILENAME | 215786-42I101 |
| SCALE | NTS |

SHEET **42I101**

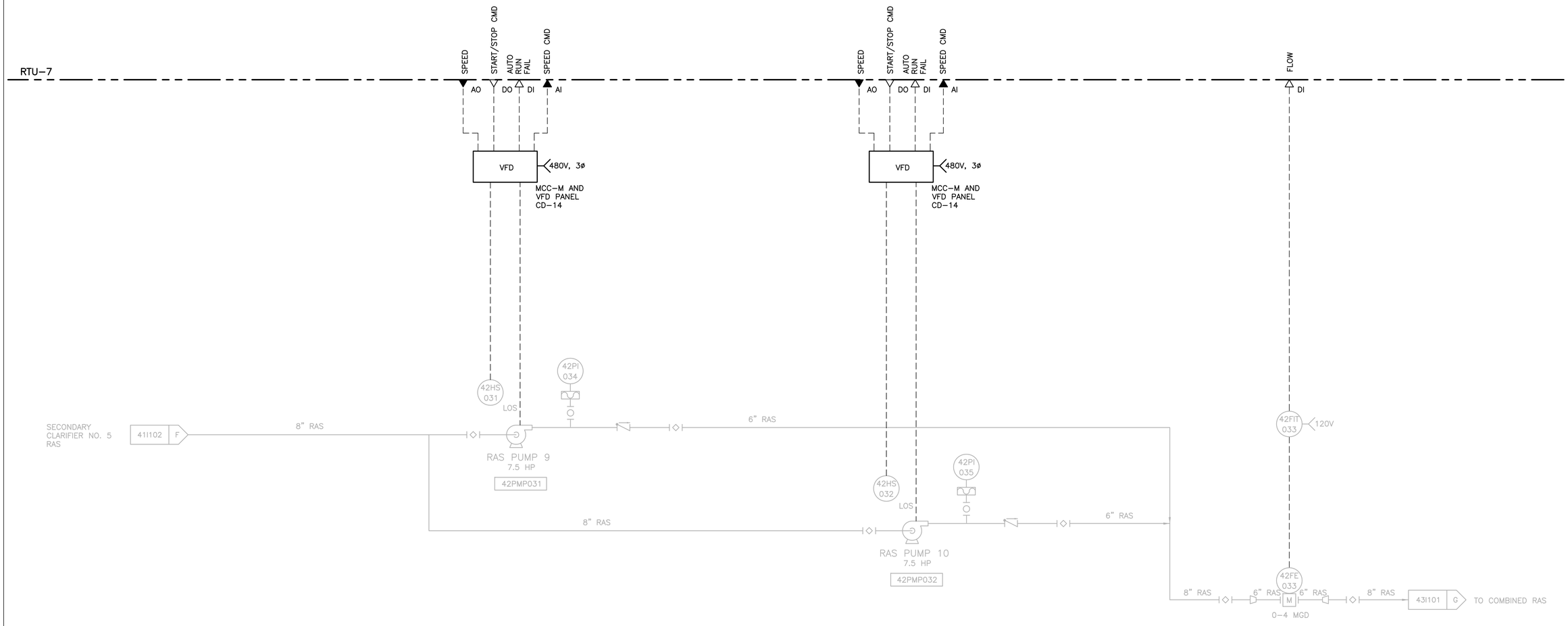


FILE: 215786-421102.dwg
DATE: Oct 07, 2015-4:49:10am, rsnider

HDR Engineering, Inc.

| ISSUE | DATE | DESCRIPTION |
|---|---|---|
| | | |
| | | |
| | | |
| | | |
| | | |
| | | |
| | | |
| A | JUNE 2015 | ISSUED FOR BID |

| | |
|---|---|
| PROJECT MANAGER | C. OLSON |
| | |
| DESIGNED | W.F. ETTLICH |
| DESIGNED | |
| CHECKED | L.D. SMITHEY |
| DRAWN | E.G. SESPENE |
| DATE | JUNE 30, 2015 |
| | |
| PROJECT NUMBER | 215786 |

REGISTERED PROFESSIONAL ENGINEER
WILLIAM F. ETTLICH
NO. 07625
EXP. 09/30/16
ELECTRICAL
STATE OF CALIFORNIA
06-30-15

CITY OF PINOLE CALIFORNIA 1903

PINOLE/HERCULES
WATER POLLUTION
CONTROL PLANT UPGRADE
CLIENT PN

**INSTRUMENTATION**

**PROCESS AND INSTRUMENTATION DIAGRAM**
**RAS PUMPING STRUCTURE 1**

0 1" 2"

| | |
|---|---|
| FILENAME | 215786-421102 |
| SCALE | NTS |

SHEET **421102**

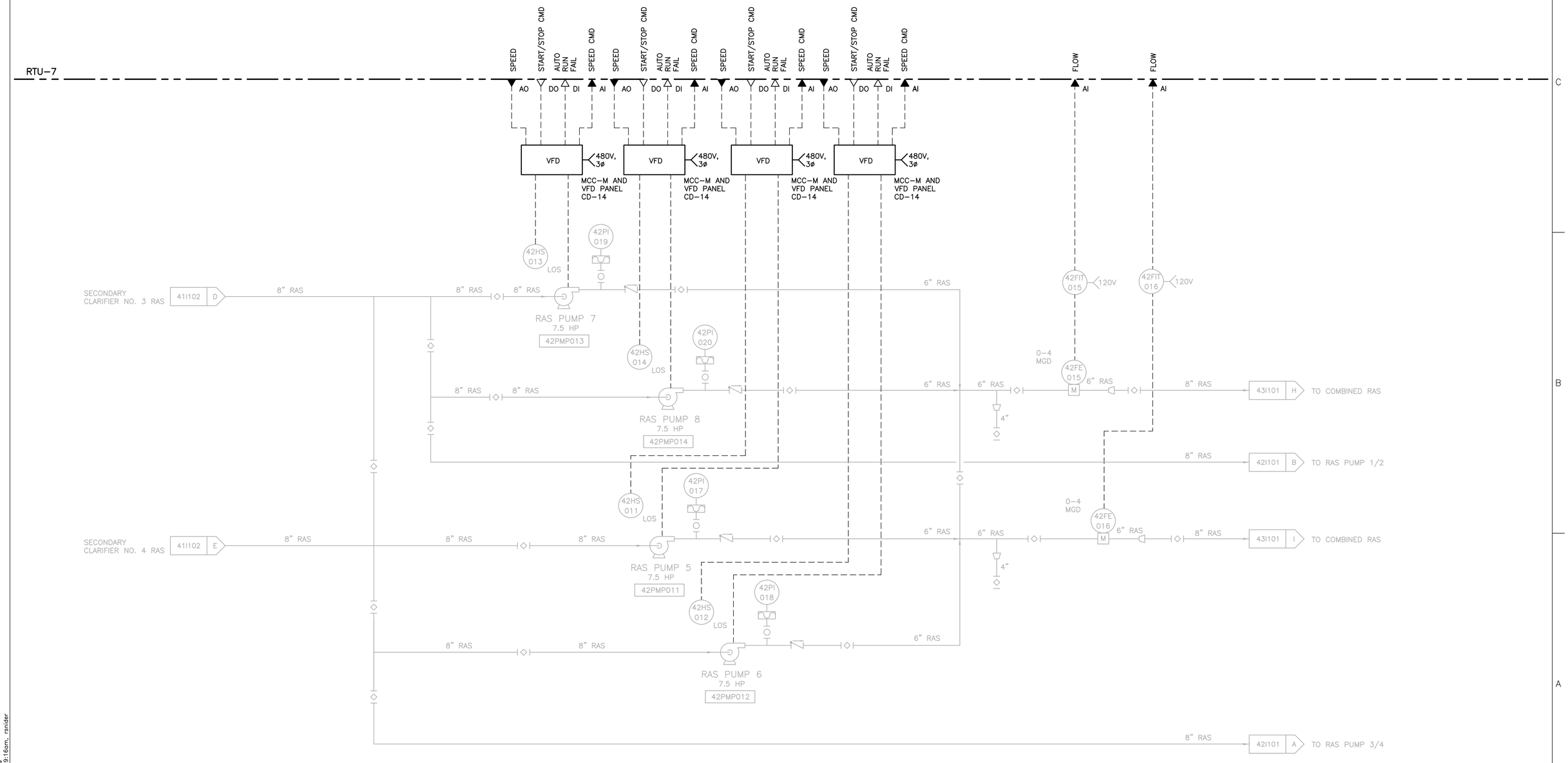


FILE: 215786-42I103.dwg
DATE: Oct 07, 2015-4:49:16am, ranider

HDR Engineering, Inc.

| ISSUE | DATE | DESCRIPTION |
|---|---|---|
| A | JUNE 2015 | ISSUED FOR BID |

| | |
|---|---|
| PROJECT MANAGER | C. OLSON |
| DESIGNED | W.F. ETTLICH |
| DESIGNED | |
| CHECKED | L.D. SMITHEY |
| DRAWN | E.G. SESPENE |
| DATE | JUNE 30, 2015 |
| PROJECT NUMBER | 215786 |

REGISTERED PROFESSIONAL ENGINEER
WILLIAM F. ETTLICH
NO. 07625
EXP. 09/30/16
ELECTRICAL
STATE OF CALIFORNIA
06-30-15

CITY OF PINOLE CALIFORNIA 1903

PINOLE/HERCULES
WATER POLLUTION
CONTROL PLANT UPGRADE
CLIENT PN

**INSTRUMENTATION**

**PROCESS AND INSTRUMENTATION DIAGRAM**
**RAS PUMPING STRUCTURE 2**

0 1" 2"

| | |
|---|---|
| FILENAME | 215786-42I103 |
| SCALE | AS NOTED |

SHEET
**42I103**

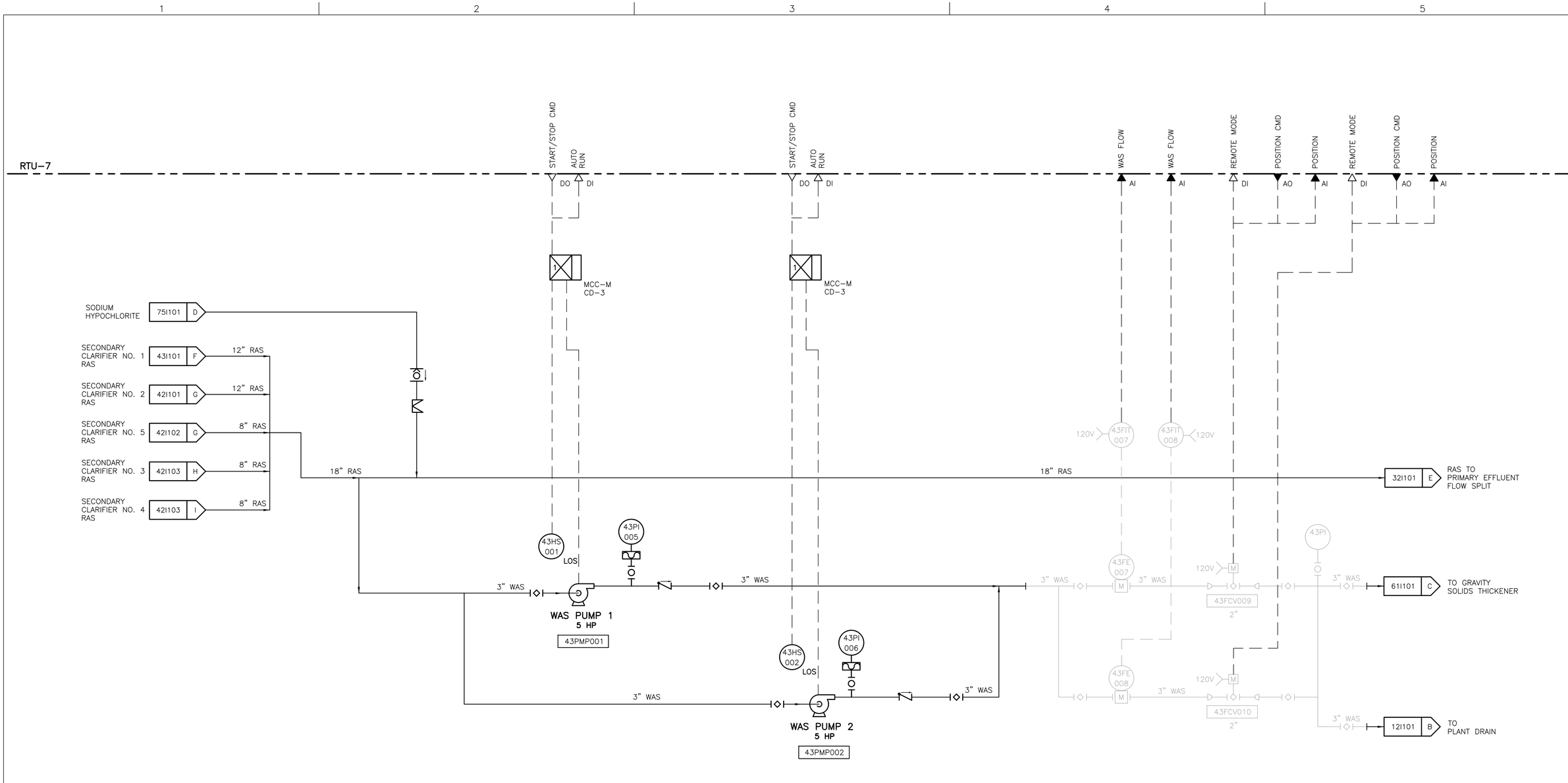


FILE: 215786-43I101.dwg
DATE: Oct 07, 2015-4:49:33am, rsnider

HDR
HDR Engineering, Inc.

| ISSUE | DATE | DESCRIPTION |
|---|---|---|
| A | JUNE 2015 | ISSUED FOR BID |

| | |
|---|---|
| PROJECT MANAGER | C. OLSON |
| DESIGNED | W.F. ETTLICH |
| DESIGNED | |
| CHECKED | L.D. SMITHEY |
| DRAWN | E.G. SESPENE |
| DATE | JUNE 30, 2015 |
| PROJECT NUMBER | 215786 |

REGISTERED PROFESSIONAL ENGINEER
WILLIAM F. ETTLICH
NO. 07625
EXP. 09/30/16
ELECTRICAL
STATE OF CALIFORNIA
06-30-15

CITY OF PINOLE CALIFORNIA 1903

PINOLE/HERCULES
WATER POLLUTION
CONTROL PLANT UPGRADE
CLIENT PN

**INSTRUMENTATION**

**PROCESS AND INSTRUMENTATION DIAGRAM**
**WAS PUMPING**

0 1" 2"

| | |
|---|---|
| FILENAME | 215786-43I101 |
| SCALE | NTS |

SHEET
**43I101**

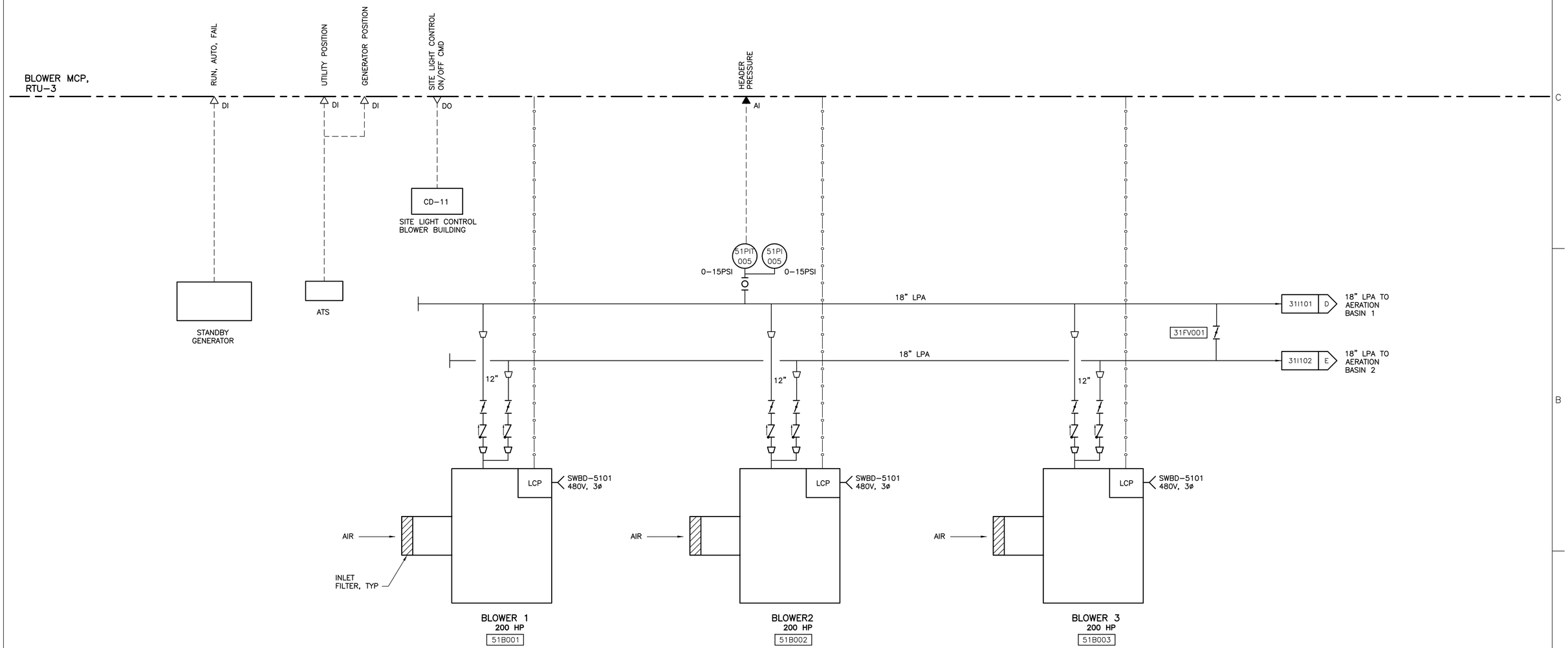


FILE: 215786-51I101.dwg
DATE: Oct 07, 2015-4:49:57am, rsnider

HDR Engineering, Inc.

| ISSUE | DATE | DESCRIPTION |
|---|---|---|
| | | |
| | | |
| | | |
| | | |
| | | |
| | | |
| | | |
| A | JUNE 2015 | ISSUED FOR BID |

| | |
|---|---|
| PROJECT MANAGER | C. OLSON |
| | |
| DESIGNED | W.F. ETTLICH |
| DESIGNED | |
| CHECKED | L.D. SMITHEY |
| DRAWN | E.G. SESPENE |
| DATE | JUNE 30, 2015 |
| | |
| PROJECT NUMBER | 215786 |

REGISTERED PROFESSIONAL ENGINEER
WILLIAM F. ETTLICH
NO. 07625
EXP. 09/30/16
ELECTRICAL
STATE OF CALIFORNIA
06-30-15

CITY OF PINOLE CALIFORNIA 1903

PINOLE/HERCULES
WATER POLLUTION
CONTROL PLANT UPGRADE
CLIENT PN

**INSTRUMENTATION**

**PROCESS AND INSTRUMENTATION DIAGRAM AERATION BLOWERS**

0 1" 2"

| | |
|---|---|
| FILENAME | 215786-51I101 |
| SCALE | NTS |

SHEET **51I101**

RTU-4

FLOW AI | FLOW AI | START CYCLE RUN FAIL AUTO DO DI | LEVEL AI | START/STOP CMD RUN FAIL REMOTE DO DI | SPEED CMD AO | START/STOP CMD AUTO RUN FAIL DO DI | SPEED AI | SPEED CMD AO | START/STOP CMD AUTO RUN FAIL DO DI | SPEED AI | FLOW AI | FLOW AI

480V, 3ø MCC-N CD-6

480V, 3ø MCC-N CD-4

CD-4 64LCP002

64WSH 003 | 64WSHP 003

VFD 480V, 3ø MCC-N CD-7

VFD 480V, 3ø MCC-N CD-7

PRIMARY SLUDGE 25I101 A — 6" PSL — 61FIT 020 120V — 61FE 020 0-300 GPM M — 6" PSL

WAS 43I101 C — 6" WAS — 61FIT 021 120V — 61FE 021 0-200 GPM M — 6" WAS

3W 71I101 C

_" SC — SCUM SKIMMER

GRAVITY SLUDGE THICKENER

1 1/2 HP 64GST022

8" GTO — 12I101 B TO PLANT DRAIN

23I101 H SCUM TO DIGESTERS

1" ARV — 4" SC

61HS 030B LOCAL RUN

61HS 030A LOS — 0-15FT — 61LT 029

6"

6" GTSL — 64HS 024 LOS — 64TSH 024 — 0-100 PSI 64PI 023 — 64PSH 023 SET 60PSI — 1" ARV — 6" GTSL

GTSL

GRAVITY THICKENED SLUDGE PUMP 1
5 HP
64PMP024

6" GTSL

6" GTSL

0-100 PSI 64PI 026 — 64PSH 026 SET 60PSI

64HS 025 LOS — 64TSH 025 — 1" ARV — 6" GTSL — 6" GTSL

64FIT 027 120V — 64FE 027 0-500 GPM M

GRAVITY THICKENED SLUDGE PUMP 2
5 HP
64PMP025

MSH — TSH

PLANT DRAIN B 12I101 — 12" PD — 61SLG101

THICKENER SCUM PUMP
5 HP
61PMP030

6" GTSL

61I102 D TO RDT 1

61I103 F TO RDT 2

61FIT 028 120V — 61FE 028 0-300 GPM M

FROM RDT 1 61I102 E — 6" TS — 6" TS — BLENDED/THICKENED SLUDGE TO DIGESTERS

FROM RDT 2 61I103 G

FILE: 215786-61I101.dwg
DATE: Oct 07, 2015-4:52:42pm, ranider

HDR Engineering, Inc.

| ISSUE | DATE | DESCRIPTION |
|---|---|---|
| A | JUNE 2015 | ISSUED FOR BID |

| | |
|---|---|
| PROJECT MANAGER | C. OLSON |
| DESIGNED | W.F. ETTLICH |
| DESIGNED | |
| CHECKED | L.D. SMITHEY |
| DRAWN | E.G. SESPENE |
| DATE | JUNE 30, 2015 |
| PROJECT NUMBER | 215786 |

REGISTERED PROFESSIONAL ENGINEER WILLIAM F. ETTLICH NO. 07625 EXP. 09/30/16 ELECTRICAL STATE OF CALIFORNIA 06-30-15

CITY OF PINOLE CALIFORNIA 1903

PINOLE/HERCULES
WATER POLLUTION
CONTROL PLANT UPGRADE
CLIENT PN

**INSTRUMENTATION**

**PROCESS AND INSTRUMENTATION DIAGRAM THICKENER 2**

0 1" 2"

| | |
|---|---|
| FILENAME | 215786-61I101 |
| SCALE | NTS |

SHEET **61I101**

RTU–4

SITE LIGHT CONTROL ON/OFF CMD — DO

RUN — DI

FAIL — DI

DATA LINK

CD–11
SITE LIGHT CONTROL
MCC–N

LCP — 480V, 3ø MCC–N
ODOR SCRUBBER
610S007

LCP — 480V, 3ø MCC–N
61LCP001

61MX002
MIXER
1HP

GRAVITY THICKENED SLUDGE — 61I1101 D — 6" GTSL — 6" GTSL

POLYMER — 65I1101 H — 3/4" POLY

RDT FLOCCULATION TANK
61T002
DRAIN

61RDT001
ROTARY DRUM THICKENER 1

M

DRIVE
3HP

61LIT 005

FILTRATE

61TSH 003

THICKENED SLUDGE PUMP 1
5HP
61PMP003

61PSH 004 — 61PI 004 — 0–100 PSI

6" TS — 61I1101 E — THICKENED SLUDGE

8" PD — 62I1101 B — FILTRATE TO PLANT DRAIN

61PSL 006 — 61PI 006 — 0–100 PSI

3W — 71I1101 C — 2"3W — 1 1/2" 3W

3W PRESSURE BOOSTER PUMP
5HP
(IF REQUIRED)
61PMP007

1 1/4" 3W — 61I1103 F — BOOSTED 3W

FILE: 215786–61I102.dwg
DATE: Oct 07, 2015–4:52:48am, rsnider

HDR Engineering, Inc.

| ISSUE | DATE | DESCRIPTION |
|---|---|---|
| A | JUNE 2015 | ISSUED FOR BID |

| | |
|---|---|
| PROJECT MANAGER | C. OLSON |
| DESIGNED | W.F. ETTLICH |
| DESIGNED | |
| CHECKED | L.D. SMITHEY |
| DRAWN | E.G. SESPENE |
| DATE | JUNE 30, 2015 |
| PROJECT NUMBER | 215786 |

REGISTERED PROFESSIONAL ENGINEER
WILLIAM F. ETTLICH
NO. 07625
EXP. 09/30/16
ELECTRICAL
STATE OF CALIFORNIA
06-30-15

CITY OF PINOLE CALIFORNIA 1903

PINOLE/HERCULES
WATER POLLUTION
CONTROL PLANT UPGRADE
CLIENT PN

**INSTRUMENTATION**

**PROCESS AND INSTRUMENTATION DIAGRAM THICKENER 1**

0 1" 2"

| | |
|---|---|
| FILENAME | 215786–61I102 |
| SCALE | NTS |

SHEET **61I102**

RTU–4

DATA LINK

LCP

MCC–N
480V, 3ø

61LCP010

61MX012

MIXER
1HP

GRAVITY THICKENED SLUDGE

61I101 F

6" GTSL

6" GTSL

RDT FLOCCULATION TANK

61T012

DRAIN

POLYMER

65I101 J

3/4" POLY

M

61RDT010

ROTARY DRUM THICKENER 2

DRIVE
3HP

61LIT 015

FILTRATE

61TSH 013

THICKENED SLUDGE PUMP 2
5HP

61PMP013

61PSH 014

61PI 014

0–100 PSI

6" TS

61I101 G

THICKENED SLUDGE

BOOSTED 3W

61I102 F

1 1/4" 3W

8" PD

62I101 B

FILTRATE TO PLANT DRAIN

FILE: 215786–61I103.dwg
DATE: Oct 07, 2015–4:52:54am, rsnider

HDR Engineering, Inc.

| ISSUE | DATE | DESCRIPTION |
|---|---|---|
| A | JUNE 2015 | ISSUED FOR BID |

| | |
|---|---|
| PROJECT MANAGER | C. OLSON |
| DESIGNED | W.F. ETTLICH |
| DESIGNED | |
| CHECKED | L.D. SMITHEY |
| DRAWN | E.G. SESPENE |
| DATE | JUNE 30, 2015 |
| PROJECT NUMBER | 215786 |

REGISTERED PROFESSIONAL ENGINEER
WILLIAM F. ETTLICH
NO. 07625
EXP. 09/30/16
ELECTRICAL
STATE OF CALIFORNIA
06-30-15

CITY OF PINOLE CALIFORNIA 1903

PINOLE/HERCULES
WATER POLLUTION
CONTROL PLANT UPGRADE
CLIENT PN

**INSTRUMENTATION**

**PROCESS AND INSTRUMENTATION DIAGRAM THICKENER 2**

0 1" 2"

| | |
|---|---|
| FILENAME | 215786–61I103 |
| SCALE | NTS |

SHEET
**61I103**

RTU–4

FLOW
AI

DATA LINK

RUN FAIL
DI

CENTRIFUGE LCP
480V, 3ø MCC–N
62PNL002

CENTRIFUGE LCP
480V, 3ø MCC–N
62PNL001
MCC–5

62CG001
EXIST CENTRIFUGE 1

EXIST MAIN DRIVE 75 HP
3" DS
EXIST BACK DRIVE 30 HP
CENTRATE
8" CEN
DEWATERED SLUDGE TO TRUCK LOADING

POLYMER 65I101 K
2" POLY
62FIT 001
120V
62FE 001
0–300GPM
DIGESTED SLUDGE
6" DS
M
6" DS
3" DS
DIGESTED SLUDGE
6" DS

62CG002
CENTRIFUGE 2

MAIN DRIVE 75 HP
3" DS
BACK DRIVE 25 HP
CENTRATE
8" CEN
DEWATERED SLUDGE TO TRUCK LOADING

POLYMER 65I101 L
2" POLY
3" DS

FROM RDT NO. 1 61I101 B
8" PD
12" PD
18" PD
12I101 B
TO PLANT DRAIN

FROM RDT NO. 2 61I103 B
8" PD
12" PD

FILE: 215786–62I101.dwg
DATE: Oct 07, 2015–4:53:57am, rsnider

HDR Engineering, Inc.

| ISSUE | DATE | DESCRIPTION |
|---|---|---|
| A | JUNE 2015 | ISSUED FOR BID |

| | |
|---|---|
| PROJECT MANAGER | C. OLSON |
| DESIGNED | W.F. ETTLICH |
| DESIGNED | |
| CHECKED | L.D. SMITHEY |
| DRAWN | E.G. SESPENE |
| DATE | JUNE 30, 2015 |
| PROJECT NUMBER | 215786 |

REGISTERED PROFESSIONAL ENGINEER
WILLIAM F. ETTLICH
NO. 07625
EXP. 09/30/16
ELECTRICAL
STATE OF CALIFORNIA
06-30-15

CITY OF PINOLE CALIFORNIA 1903

PINOLE/HERCULES
WATER POLLUTION
CONTROL PLANT UPGRADE
CLIENT PN

**INSTRUMENTATION**

**PROCESS AND INSTRUMENTATION DIAGRAM SOLIDS DEWATERING**

0 1" 2"

| | |
|---|---|
| FILENAME | 215786–62I101 |
| SCALE | NTS |

SHEET **62I101**

RTU-4

PACING
RUN
FAIL
AUTO
AO
DI

ACTIVE
DI

65FSH 007
EYEWASH

EXISTING POLYMER TOTE 1

EXISTING POLYMER TOTE 2

TOTE MIXER

POLYMER SUCTION LINE (LONG ENOUGH TO REACH EITHER TOTE

3/4" POLY

PULSATION DAMPENER

PRESSURE GAUGE

ROTOMETER

4-FUNCTION VALVE (TYP)

POLYMER METERING PUMP

BLENDING UNIT 1

BLENDING UNIT 2

3/4" 2W

2W

3/4" POLY

61I102 H POLYMER TO THICKENER 1

61I103 J POLYMER TO THICKENER 2

65PBU001

65PBU002

PACKAGE BLEND SYSTEM

2" 2W

2" POLY

62I101 K POLYMER TO CENTRIFUGE 1

62I101 L POLYMER TO CENTRIFUGE 2

65PBU003

65PBU004

PACKAGE BLEND SYSTEM

FILE: 215786-65I101.dwg
DATE: Oct 07, 2015-4:54:19am, rsnider

HDR Engineering, Inc.

| ISSUE | DATE | DESCRIPTION |
|---|---|---|
| A | JUNE 2015 | ISSUED FOR BID |

| | |
|---|---|
| PROJECT MANAGER | C. OLSON |
| DESIGNED | W.F. ETTLICH |
| DESIGNED | |
| CHECKED | L.D. SMITHEY |
| DRAWN | E.G. SESPENE |
| DATE | JUNE 30, 2015 |
| PROJECT NUMBER | 215786 |

REGISTERED PROFESSIONAL ENGINEER
WILLIAM F. ETTLICH
NO. 07625
EXP. 09/30/16
ELECTRICAL
STATE OF CALIFORNIA
06-30-15

CITY OF PINOLE CALIFORNIA 1903

PINOLE/HERCULES
WATER POLLUTION
CONTROL PLANT UPGRADE
CLIENT PN

**INSTRUMENTATION**

**PROCESS AND INSTRUMENTATION DIAGRAM SOLIDS POLYMER**

0 1" 2"

| | |
|---|---|
| FILENAME | 215786-65I101 |
| SCALE | NTS |

SHEET 65I101

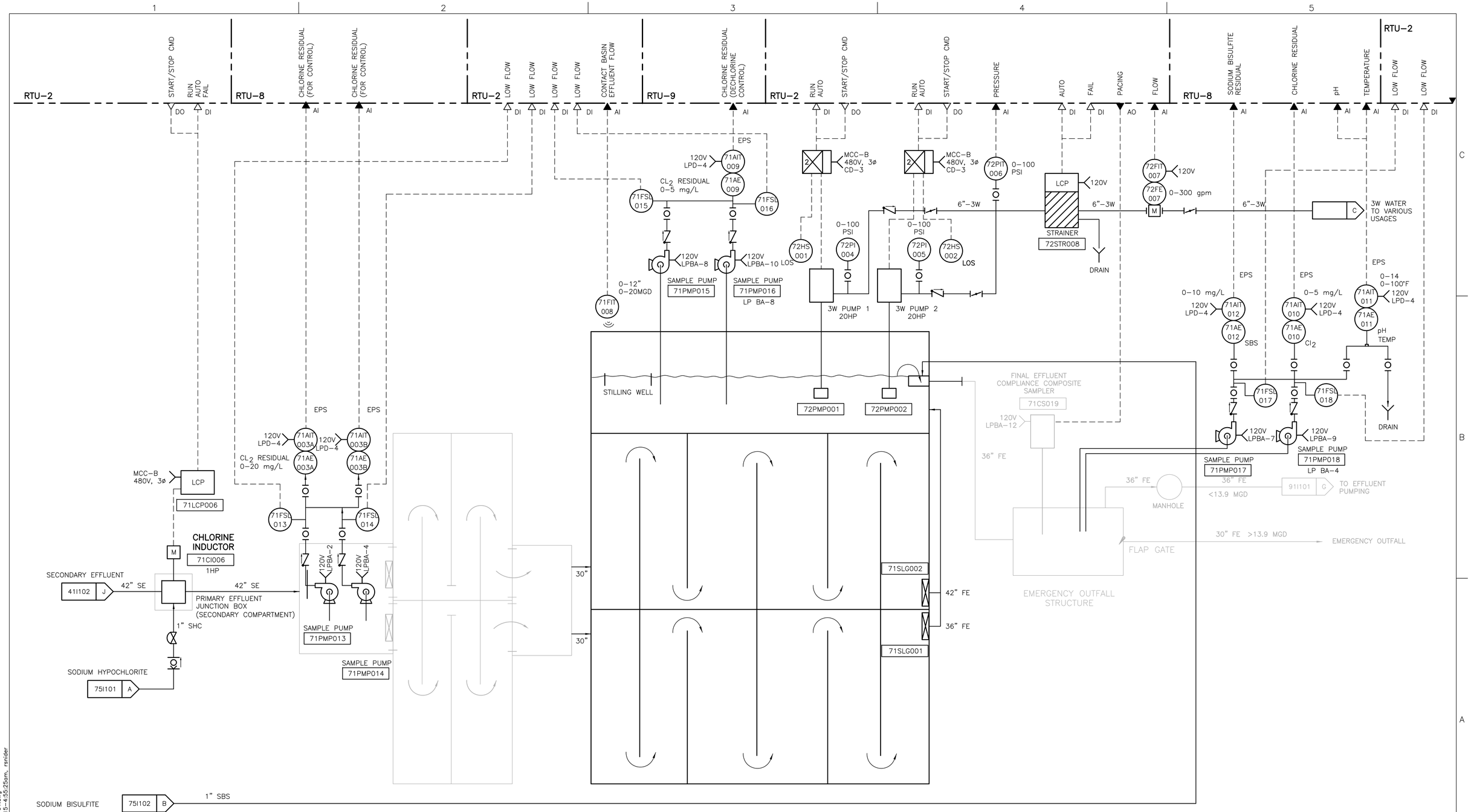


| | | |
|---|---|---|
| A | JUNE 2015 | ISSUED FOR BID |
| ISSUE | DATE | DESCRIPTION |

| | |
|---|---|
| PROJECT MANAGER | C. OLSON |
| DESIGNED | W.F. ETTLICH |
| DESIGNED | |
| CHECKED | L.D. SMITHEY |
| DRAWN | E.G. SESPENE |
| DATE | JUNE 30, 2015 |
| PROJECT NUMBER | 215786 |

HDR Engineering, Inc.

REGISTERED PROFESSIONAL ENGINEER
WILLIAM F. ETTLICH
NO. 07625
EXP. 09/30/16
ELECTRICAL
STATE OF CALIFORNIA
06-30-15

CITY OF PINOLE CALIFORNIA 1903

PINOLE/HERCULES
WATER POLLUTION
CONTROL PLANT UPGRADE
CLIENT PN

**INSTRUMENTATION**

**PROCESS AND INSTRUMENTATION DIAGRAM CHLORINE CONTACT**

0 1" 2"

| | |
|---|---|
| FILENAME | 215786-71I101 |
| SCALE | NTS |

SHEET **71I101**

FILE: 215786-71I101.dwg
DATE: Oct 07, 2015-4:55:25am, rsnider

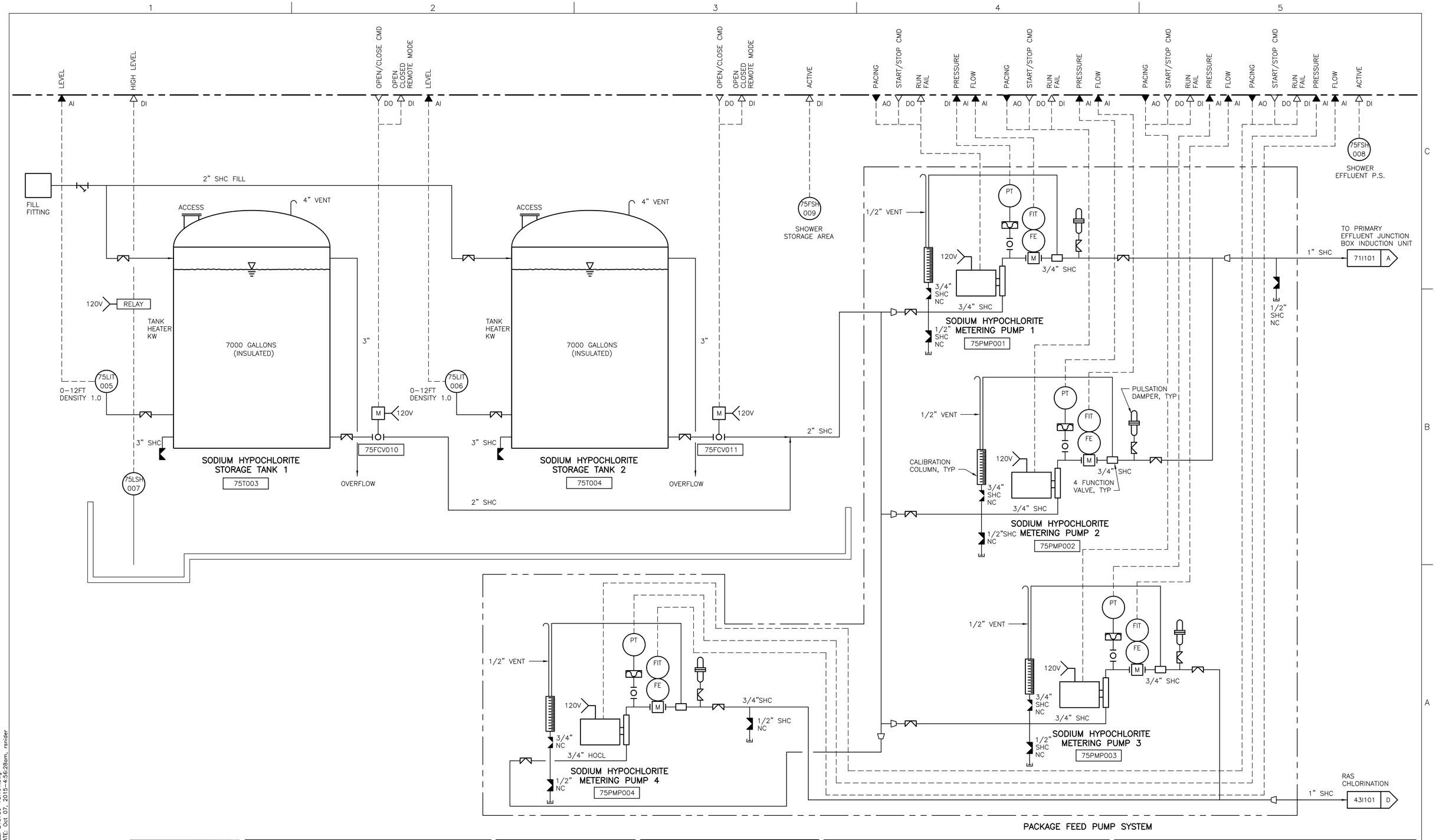


FILE: 215786-75I101.dwg
DATE: Oct 07, 2015-4:56:28am, rsnider

HDR Engineering, Inc.

| ISSUE | DATE | DESCRIPTION |
|---|---|---|
| A | JUNE 2015 | ISSUED FOR BID |

| | |
|---|---|
| PROJECT MANAGER | C. OLSON |
| DESIGNED | W.F. ETTLICH |
| DESIGNED | |
| CHECKED | L.D. SMITHEY |
| DRAWN | E.G. SESPENE |
| DATE | JUNE 30, 2015 |
| PROJECT NUMBER | 215786 |

REGISTERED PROFESSIONAL ENGINEER
WILLIAM F. ETTLICH
NO. 07625
EXP. 09/30/16
ELECTRICAL
STATE OF CALIFORNIA
06-30-15

CITY OF PINOLE CALIFORNIA 1903

PINOLE/HERCULES
WATER POLLUTION
CONTROL PLANT UPGRADE
CLIENT PN

**INSTRUMENTATION**

**PROCESS AND INSTRUMENTATION DIAGRAM**
**SODIUM HYPOCHLORITE STORAGE & FEED SYSTEM**

0 1" 2"

| FILENAME | 215786-75I101 |
|---|---|
| SCALE | NTS |

SHEET **75I101**

RTU-8

LEVEL AI
HIGH LEVEL DI
OPEN/CLOSE CMD DO
OPEN CLOSED REMOTE MODE DI
LEVEL AI
OPEN/CLOSE CMD DO
OPEN CLOSED REMOTE MODE DI
PACING AO
START/STOP CMD DO
RUN FAIL DI
PRESSURE AI
FLOW AI
PACING AO
START/STOP CMD DO
RUN FAIL DI
PRESSURE AI
FLOW AI
PACING AO
START/STOP CMD DO
RUN FAIL DI
OPEN/CLOSE CMD DO
PRESSURE AI
FLOW AI
OPEN/CLOSE CMD DO

FILL FITTING
2" SBS FILL
RELAY 120V
4" VENT
TANK HEATER 840W
120V
7000 GALLONS HEATED
SODIUM BISULFITE STORAGE TANK 1
75T109
3" SBS
75LIT 105
0-12FT DENSITY 1.33
75SH/L 107
75LSH 107
3" OVERFLOW
120V HEAT TAPE
75FCV111
M 120V
2" SBS
3" SBS
4" VENT
TANK HEATER 840W
120V
7000 GALLONS HEATED
SODIUM BISULFITE STORAGE TANK 2
75T110
75LIT 106
0-12FT DENSITY 133
75SH/L 108
3" OVERFLOW
120V HEAT TAPE
75FCV112
M 120V
2" SBS
2" SBS

PACKAGE FEED PUMP SYSTEM

1/2" VENT
PT
FIT
FE
M
120V
3/4" SBS NC
3/4" SBS
4W
SOLENOID 1
S
TO CHLORINE CONTACT BASIN EFFLUENT BOX
71I101 B
1 1/2" SBS
1/2" SBS NC
SODIUM BISULFITE METERING PUMP 1
75PMP101
3/4" SBS NC

1/2" VENT
PT
FIT
FE
M
120V
PULSATION DAMPER, TYP
4 FUNCTION VALVE, TYP
CALIBRATION COLUMN, TYP
3/4" SBS NC
3/4" SBS
SODIUM BISULFITE METERING PUMP 2
75PMP102
1/2" SBS NC
3" VENT

1/2" VENT
PT
FIT
FE
M
120V
TO FINAL EFFLUENT
91I101 C
1 1/2" SBS
1/2" SBS NC
3/4" NC
3/4" SBS
3/4" SBS
SODIUM BISULFITE METERING PUMP 3
75PMP103
1/2" SBS NC
SOLENOID 2
S
4W

FILE: 215786-75I102.dwg
DATE: Oct 07, 2015-4:56:34am, rsnider

HDR Engineering, Inc.

| ISSUE | DATE | DESCRIPTION |
|---|---|---|
| A | JUNE 2015 | ISSUED FOR BID |

| | |
|---|---|
| PROJECT MANAGER | C. OLSON |
| DESIGNED | W.F. ETTLICH |
| DESIGNED | |
| CHECKED | L.D. SMITHEY |
| DRAWN | E.G. SESPENE |
| DATE | JUNE 30, 2015 |
| PROJECT NUMBER | 215786 |

REGISTERED PROFESSIONAL ENGINEER
WILLIAM F. ETTLICH
NO. 07625
EXP. 09/30/16
ELECTRICAL
STATE OF CALIFORNIA
06-30-15

CITY OF PINOLE CALIFORNIA 1903

PINOLE/HERCULES
WATER POLLUTION
CONTROL PLANT UPGRADE
CLIENT PN

**INSTRUMENTATION**

**PROCESS AND INSTRUMENTATION DIAGRAM**
**SODIUM BISULFITE STORAGE AND FEED SYSTEM**

0 1" 2"

| FILENAME | 215786-75I102 |
|---|---|
| SCALE | NTS |

SHEET **75I102**

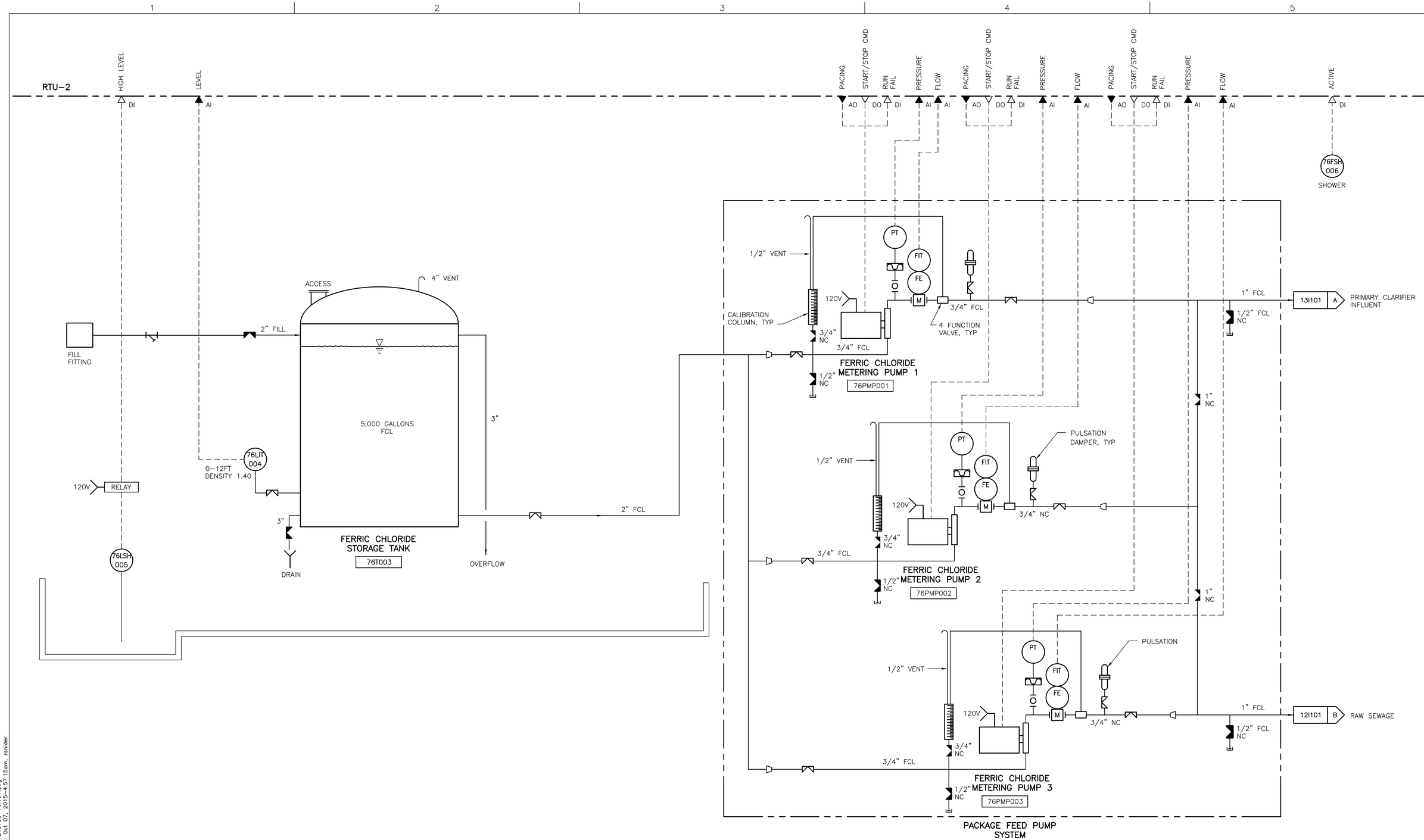


FILE: 215786-76I101.dwg
DATE: Oct 07, 2015-4:57:15am, rsnider

HDR
HDR Engineering, Inc.

| ISSUE | DATE | DESCRIPTION |
|---|---|---|
| A | JUNE 2015 | ISSUED FOR BID |

| | |
|---|---|
| PROJECT MANAGER | C. OLSON |
| DESIGNED | W.F. ETTLICH |
| DESIGNED | |
| CHECKED | L.D. SMITHEY |
| DRAWN | E.G. SESPENE |
| DATE | JUNE 30, 2015 |
| PROJECT NUMBER | 215786 |

REGISTERED PROFESSIONAL ENGINEER
WILLIAM F. ETTLICH
NO. 07625
EXP. 09/30/16
ELECTRICAL
STATE OF CALIFORNIA
06-30-15

CITY OF PINOLE CALIFORNIA 1903

PINOLE/HERCULES
WATER POLLUTION
CONTROL PLANT UPGRADE
CLIENT PN

**INSTRUMENTATION**

**PROCESS AND INSTRUMENTATION DIAGRAM**
**FERRIC CHLORIDE STORAGE AND FEED SYSTEM**

0 1" 2"

| | |
|---|---|
| FILENAME | 215786-76I101 |
| SCALE | NTS |

SHEET
**76I101**

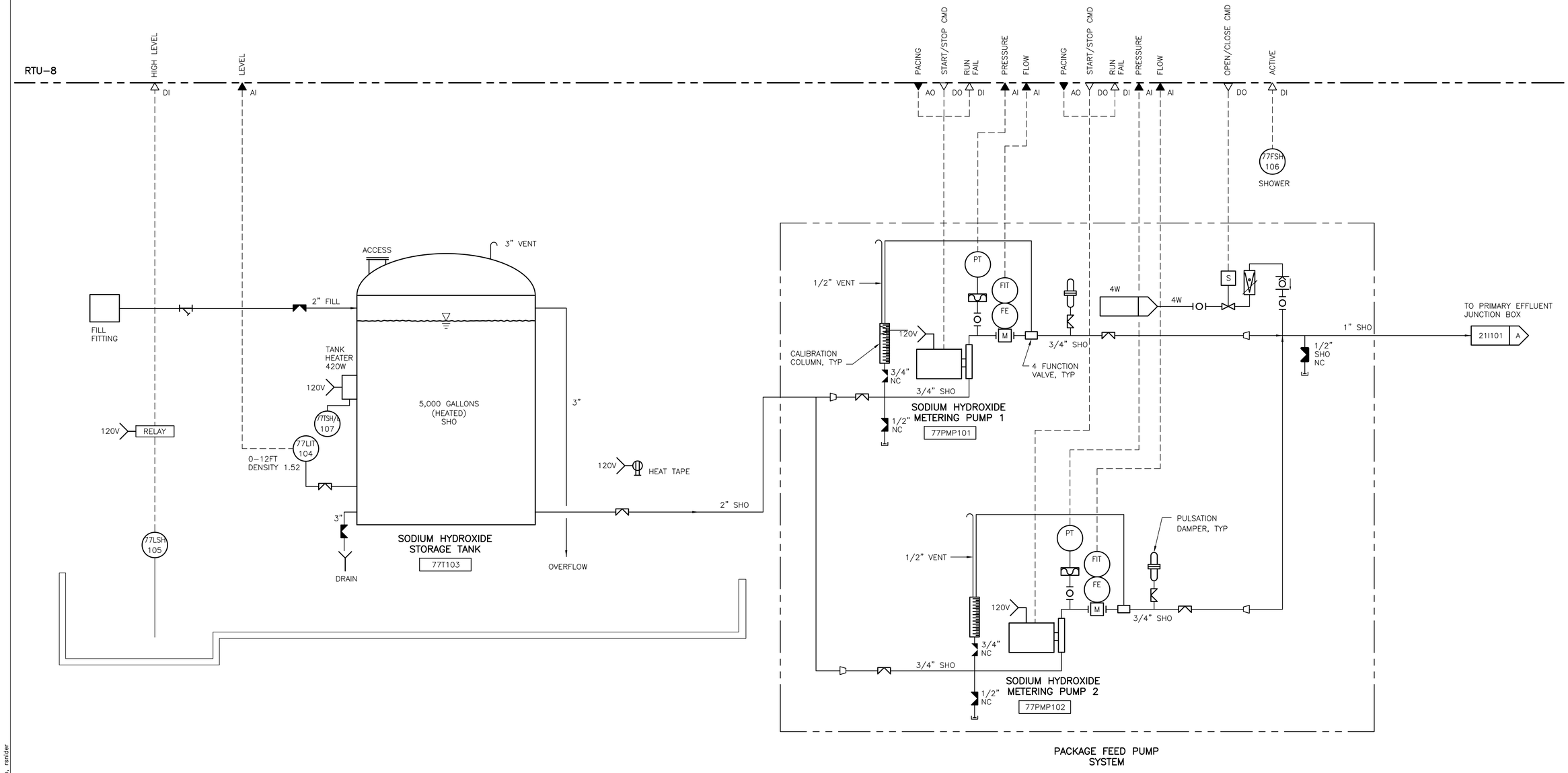


FILE: 215786-77I101.dwg
DATE: Oct 07, 2015-4:57:38am, rsnider

HDR Engineering, Inc.

| ISSUE | DATE | DESCRIPTION |
|---|---|---|
| A | JUNE 2015 | ISSUED FOR BID |

| | |
|---|---|
| PROJECT MANAGER | C. OLSON |
| DESIGNED | W.F. ETTLICH |
| DESIGNED | |
| CHECKED | L.D. SMITHEY |
| DRAWN | E.G. SESPENE |
| DATE | JUNE 30, 2015 |
| PROJECT NUMBER | 215786 |

REGISTERED PROFESSIONAL ENGINEER
WILLIAM F. ETTLICH
NO. 07625
EXP. 09/30/16
ELECTRICAL
STATE OF CALIFORNIA
06-30-15

CITY OF PINOLE CALIFORNIA 1903

PINOLE/HERCULES
WATER POLLUTION
CONTROL PLANT UPGRADE
CLIENT PN

**INSTRUMENTATION**

**PROCESS AND INSTRUMENTATION DIAGRAM**
**SODIUM HYDROXIDE STORAGE AND FEED SYSTEM**

0 1" 2"

| | |
|---|---|
| FILENAME | 215786-77I101 |
| SCALE | NTS |

SHEET **77I101**

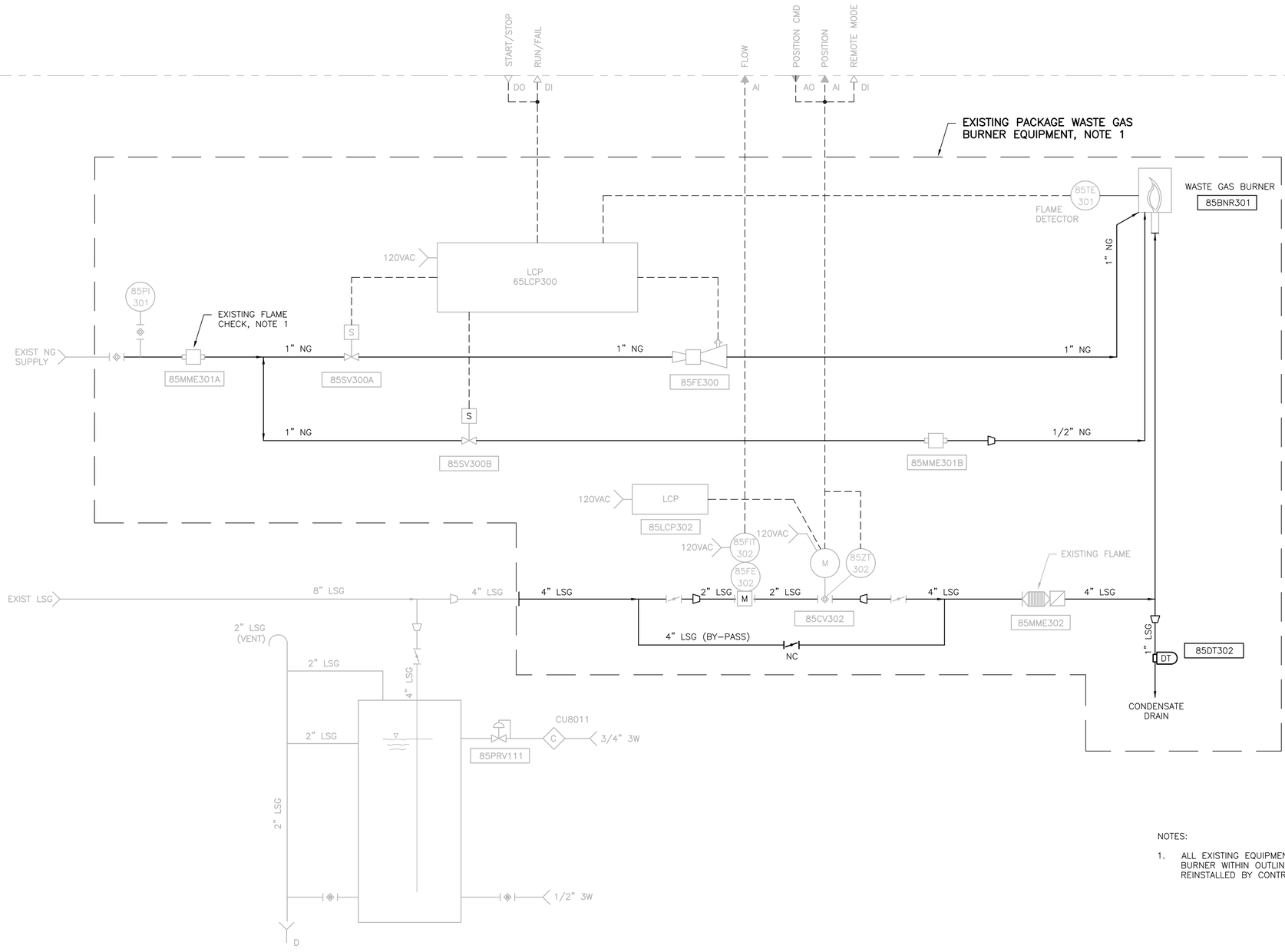


NOTES:

1. ALL EXISTING EQUIPMENT FOR PACKAGE WASTE GAS BURNER WITHIN OUTLINE TO BE REMOVED AND REINSTALLED BY CONTRACTOR AS SHOWN ON DRAWINGS.

FILE: 215786–85I101.dwg
DATE: Oct 07, 2015–5:00:47am, rsnider

HDR Engineering, Inc.

| ISSUE | DATE | DESCRIPTION |
|---|---|---|
| | | |
| | | |
| | | |
| | | |
| | | |
| | | |
| A | JUNE 2015 | ISSUED FOR BID |

| | |
|---|---|
| PROJECT MANAGER | C. OLSON |
| | |
| DESIGNED | W.F. ETTLICH |
| DESIGNED | |
| CHECKED | L.D. SMITHEY |
| DRAWN | E.G. SESPENE |
| DATE | JUNE 30, 2015 |
| | |
| PROJECT NUMBER | 215786 |

REGISTERED PROFESSIONAL ENGINEER
WILLIAM F. ETTLICH
NO. 07625
EXP. 09/30/16
ELECTRICAL
STATE OF CALIFORNIA
09-30-15

CITY OF PINOLE CALIFORNIA 1903

PINOLE/HERCULES
WATER POLLUTION
CONTROL PLANT UPGRADE
CLIENT PN

**INSTRUMENTATION**

**PROCESS AND INSTRUMENTATION DIAGRAM DIGESTER GAS FLARE SYSTEM**

0 1" 2"

| | |
|---|---|
| FILENAME | 215786–85I101 |
| SCALE | NTS |

SHEET **85I101**

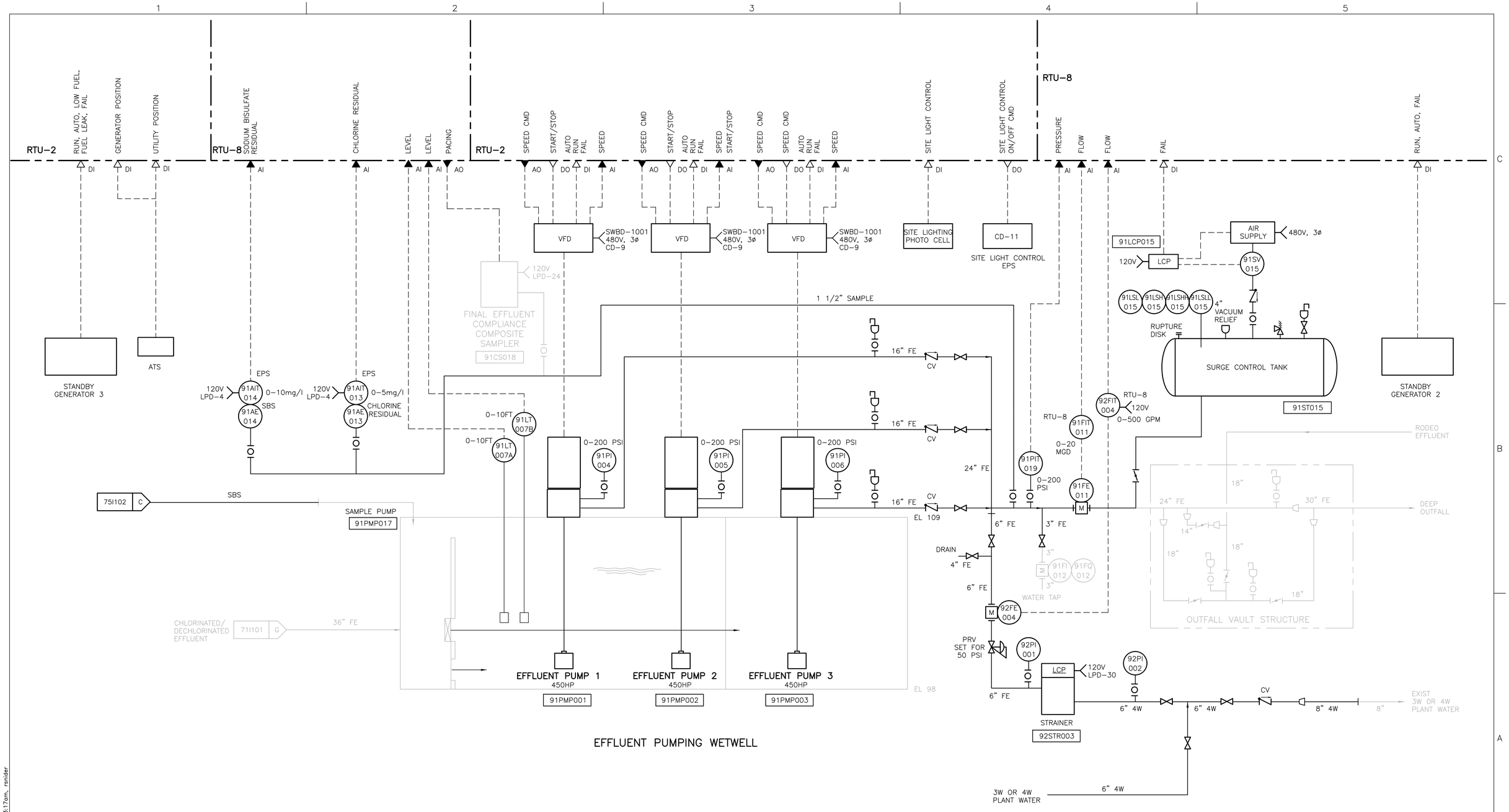


FILE: 215786-91I101.dwg
DATE: Oct 07, 2015-5:03:17am, rsnider

HDR
HDR Engineering, Inc.

| ISSUE | DATE | DESCRIPTION |
|---|---|---|
| A | JUNE 2015 | ISSUED FOR BID |

| | |
|---|---|
| PROJECT MANAGER | C. OLSON |
| DESIGNED | W.F. ETTLICH |
| DESIGNED | |
| CHECKED | L.D. SMITHEY |
| DRAWN | E.G. SESPENE |
| DATE | JUNE 30, 2015 |
| PROJECT NUMBER | 215786 |

REGISTERED PROFESSIONAL ENGINEER WILLIAM F. ETTLICH NO. 07625 EXP. 09/30/16 ELECTRICAL STATE OF CALIFORNIA 06-30-15

CITY OF PINOLE CALIFORNIA 1903

PINOLE/HERCULES WATER POLLUTION CONTROL PLANT UPGRADE CLIENT PN

**INSTRUMENTATION**

**PROCESS AND INSTRUMENTATION DIAGRAM EFFLUENT PUMPING**

0 1" 2"

| | |
|---|---|
| FILENAME | 215786-91I101 |
| SCALE | NTS |

SHEET 91I101